G7S-□-E

CSM_G7S-_-E_DS_E_7_3

Relays with Forcibly Guided Contacts and High Switching Capacity of 10 A

- Relays with forcibly guided contacts (EN61810-3, certified by VDE).
- Supports the CE marking of machinery (Machinery Directive).
- Helps avoid hazardous machine status when used as part of an interlocking circuit.
- Track-mounting and Back-mounting Sockets are available.

⚠ Be sure to read the *"Safety Precautions"* on page 5 and the *"Precautions for All Relays with Forcibly Guided Contacts"*.

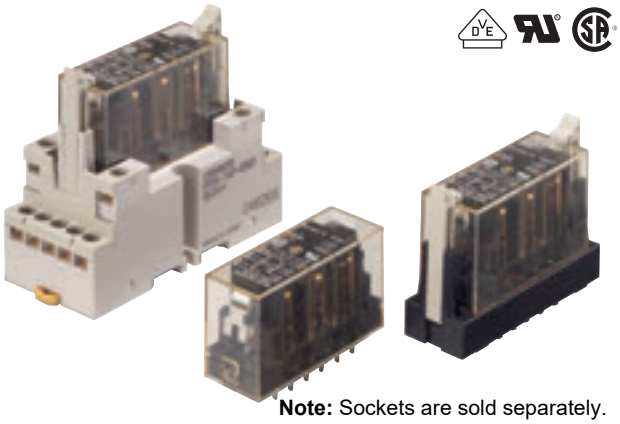

Note: Sockets are sold separately.

For the most recent information on models that have been certified for safety standards, refer to your OMRON website.

Model Number Structure

Model Number Legend

G7S-□A□B-E
1 2

1. NO Contact Poles
4: 4PST-NO
3: 3PST-NO

2. NC Contact Poles
2: DPST-NC
3: 3PST-NC

Ordering Information

Main unit

Relays with Forcibly Guided Contacts

Type	Poles	Contact configuration	Rated voltage	Model
Standard	6 poles	4PST-NO, DPST-NC	24 VDC	**G7S-4A2B-E**
		3PST-NO, 3PST-NC		**G7S-3A3B-E**

Options (order separately)

Sockets

Type4		Rated voltage	Model
Track-mounting	Common for track mounting and screw mounting	24 VDC	**P7S-14F-END**
Back-mounting	PCB terminals	---	**P7S-14P-E**

Specifications

Ratings

Safety Relay Unit

Coil

Item / Rated voltage	Rated current (mA)	Coil resistance (Ω)	Max. voltage (V)	Power consumption (W)
24 VDC	30	800	110%	Approx. 0.8

Note: 1. The rated current and coil resistance are measured at a coil temperature of 23°C with tolerances of ±15%.
2. The maximum voltage is based on an ambient operating temperature of 23°C maximum.

Contacts

Item	Load	Resistive load
Rated load	NO contact	10 A at 250 VAC 10 A at 30 VDC
	NC contact	6 A at 250 VAC 6 A at 30 VDC
Rated carry current	NO contact	10 A
	NC contact	6 A
Maximum switching voltage		250 VAC, 30 VDC
Maximum switching current	NO contact	10 A
	NC contact	6 A

Characteristics

Safety Relay Unit

Contact resistance ✻1		100 mΩ max.
Operating time ✻2		50 ms max.
Release time ✻2		50 ms max.
Must operate voltage		80% max.
Must release voltage		10% min.
Maximum operating frequency	Mechanical	18,000 operations/h
	Rated load	1,800 operations/h
Insulation resistance ✻3		100 MΩ min.
Dielectric strength ✻4 ✻5		Between coil and contacts: Between coil and pole 3 or coil and pole 4: 4,000 VAC, 50/60 Hz for 1 min Other than the above:2,500 VAC, 50/60 Hz for 1 min Between different poles: Between pole 1, 3, or 5 and pole 2, 4, or 6: 4,000 VAC, 50/60 Hz for 1 min Other than the above:2,500 VAC, 50/60 Hz for 1 min Between contacts of same polarity:1,500 VAC, 50/60 Hz for 1 min
Vibration resistance	Destruction	10 to 55 to 10 Hz, 0.75-mm single amplitude (1.5-mm double amplitude)
	Malfunction	10 to 55 to 10 Hz, 0.375-mm single amplitude (0.75-mm double amplitude)
Shock resistance	Destruction	1,000 m/s^2
	Malfunction	100 m/s^2
Durability ✻6	Mechanical	10,000,000 operations min. (at approx. 18,000 operations/h)
	Electrical	100,000 operations min. (at the rated load and approx. 1,800 operations/h)
Inductive load switching capability *7 (IEC60947-5-1)	NO Contact	AC15 AC240V 5A DC13 DC24V 2A
	NC Contact	AC15 AC240V 3A DC13 DC24V 2A
Failure rate (P level) (reference value ✻8)		5 VDC, 1 mA
Ambient operating temperature		–25 to 70°C (with no icing or condensation)
Ambient operating humidity		5% to 85%
Weight		Approx. 65 g

Note: 1. The above values are initial values.
2. Performance characteristics are based on a coil temparature of 23°C.

✻1. Measurement conditions: 5 VDC, 10 mA, voltage drop method.

✻2. Measurement conditions: Rated voltage operation
Ambient operating temperature: 23°C
Contact bounce time is not included.

✻3. The insulation resistance was measured with a 500-VDC megohmmeter at the same locations as the dielectric strength was measured.

✻4. When using a P7S Socket, the dielectric strength between coil and contacts and between different poles is 2,000 VAC, 50/60 Hz for 1 min.

✻5. The coil refers to terminals 0-1, pole 1 refers to terminals 13–14, pole 2 refers to terminals 23–24, pole 3 refers to terminals 33–34, pole 4 refers to terminals 41–42 or 43–44, pole 5 refers to terminals 51–52, and pole 6 refers to terminals 61–62.

✻6. The durability is for an ambient temperature of 15 to 35°C and an ambient humidity of 25% to 75%.

✻7. AC15: cosϕ = 0.3, DC13: L/R = 96-ms

✻8. The failure rate is based on an operating frequency of 60 operations/min.

Options (order separately)

Sockets

Model		P7S-14F-END	P7S-14P-E
Continuous current		10 A	
Dielectric strength	Between contact terminals of different polarity	2000 VAC for 1 min.	
	Between contact terminals of same polarity	1500 VAC for 1 min.	
	Between coil and contact terminals	2000 VAC for 1 min.	
Insulation resistance		1000 MΩ min. ✻	
Weight		Approx. 110g	Approx. 25g

Note: Use the P7S-14F-END in the ambient humidity range of 25 to 85%, the P7SA-14P-E in the ambient humidity range of 5 to 85%.
✻ Measurement conditions: Measurement of the same points as for the dielectric strength at 500 VDC.

Certified Standards

Safety Relay Unit

EN Standards, VDE Certified

Models	Ratings	Standard number	Certification No.	Operating coil	Contact ratings
G7S-3A3B-E G7S-4A2B-E	24 VDC	EN61810-1 Electromagnetic relay EN61810-3 Relays with forcibly guided contacts	40011951	24 VDC	NO Contact: 10 A 250 VAC (Resistive) 10 A 30 VDC (Resistive) NC Contact: 6 A 250 VAC (Resistive) 6 A 30 VDC (Resistive)

UL Standards Certification (File No. E41515) Industrial Control Devices

Models	Standard number	Category	Listed/ Recognized	Contact ratings	Operating Coil ratings
G7S-3A3B-E G7S-4A2B-E	UL508	NRNT2	Recognized	NO Contact: 10 A per pole, 20 A total, 277 VAC (Resistive) NC Contact: 6 A per pole, 20 A total, 277 VAC (Resistive)	24 VDC

CSA standard CSA C22.2 No.14 Industrial Control Devices

Models	Class number	File No.	Contact ratings	Operating Coil ratings
G7S-3A3B-E G7S-4A2B-E	3211-07	LR35535	NO Contact: 10 A per pole, 20 A total, 277 VAC (Resistive) NC Contact: 6A per pole, 20 A total, 277 VAC (Resistive)	24 VDC

Sockets

CE Marking Compliance

Models	EMC Directive	Low Voltage Directive	Machinery Directive	Safety Category
P7S-14F-END P7S-14P-E	Not applicable	○	Not applicable	1

The CE compliance declaration was made in combination with the Safety Relay.

Note: 1. The Safety Category refers to the maximum applicable category selected when constructing control system safety components. The category does not apply to individual components.

2. Details and other information on conformity levels are issued as part of the "EU Declaration of Conformity". Please contact your OMRON representative for more information.

EN Standards, VDE Certified

Models	Standard number	Certification No.
P7S-14F-END P7S-14P-E	EN61984	40007595

UL Standards Certification (File No. E87929) Industrial Control Devices

Models	Standard number	Category	Listed/Recognized
P7S-14F-END P7S-14P-E	UL508	SWIV2	Recognized

CSA standard CSA C22.2 No.14 and CSA C22.2 No. 158 Industrial Control Devices

Models	Class number	File No.
P7S-14F-END P7S-14P-E	3211 07	LR35535

Forcibly Guided Contacts (from EN61810-3)

If an NO contact becomes welded, all NC contacts will maintain a minimum distance of 0.5 mm when the coil is not energized. Likewise if an NC contact becomes welded, all NO contacts will maintain a minimum distance of 0.5 mm when the coil is energized.

Dimensions

(Unit: mm)

Relays with Forcibly Guided Contacts

G7S-4A2B-E
G7S-3A3B-E

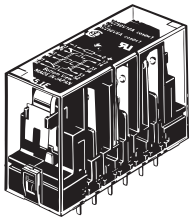

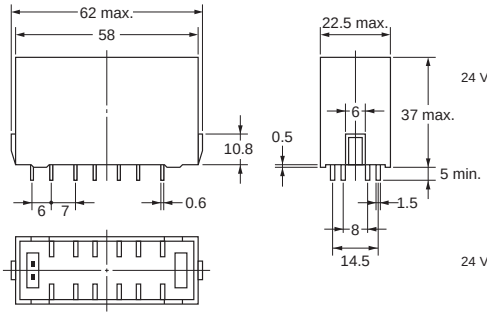

Terminal Arrangement/Internal Connection Diagram (Bottom View)

G7S-4A2B-E

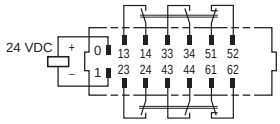

G7S-3A3B-E

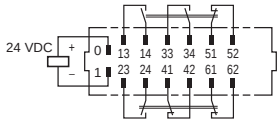

Mounting Hole Dimensions

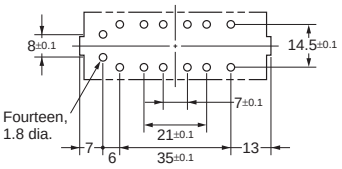

Sockets

Track-mounting Socket
P7S-14F-END

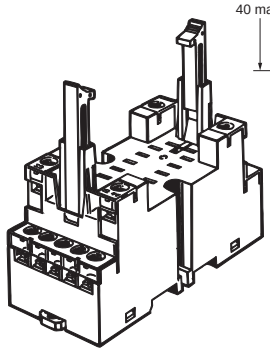

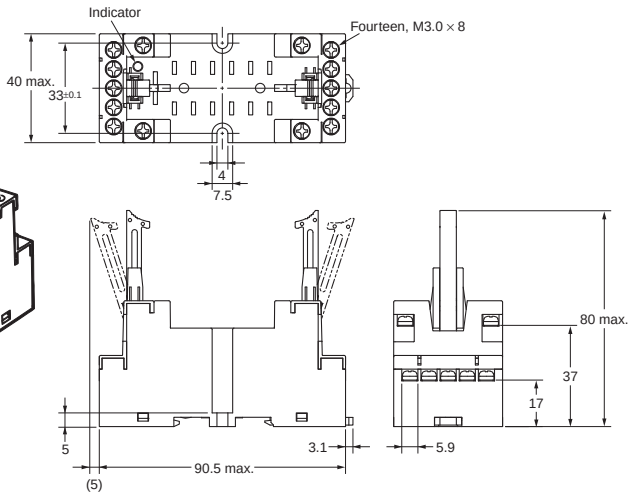

Terminal Arrangement/Internal Connection Diagram (Top View)

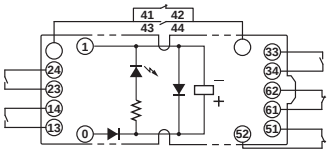

Mounting Hole Dimensions

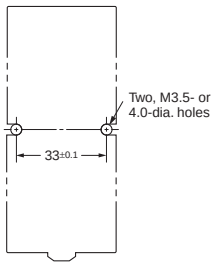

Back-mounting Socket (PCB Terminals)
P7S-14P-E

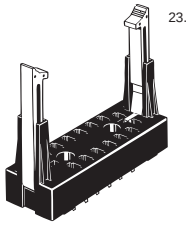

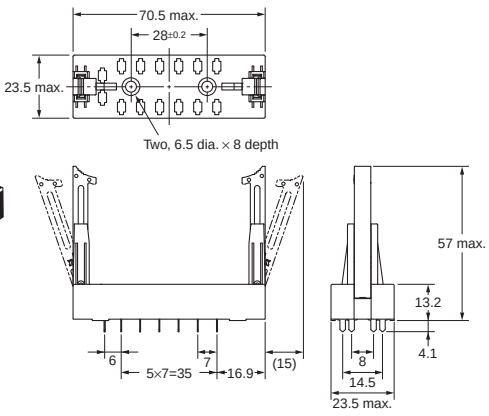

Terminal Arrangement/Internal Connection Diagram (Bottom View) With G7S-4A2B-E mounted

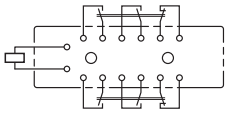

With G7S-3A3B-E mounted

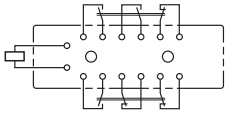

Mounting Hole Dimensions

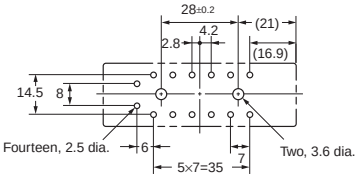

Safety Precautions

Be sure to read the precautions for "*Precautions for All Relays with Forcibly Guided Contacts*" in the website at:http://www.ia.omron.com/.

Indication and Meaning for Safe Use

⚠ CAUTION	**Indicates a potentially hazardous situation which, if not avoided, may result in minor or moderate injury or in property damage.**
Precautions for Safe Use	**Supplementary comments on what to do or avoid doing, to use the product safely.**

⚠ CAUTION

Do not pass currents of 6 A or more when using this product in combination with the P7S-14F/14P/14A Socket. Doing so may result in fire. Use this product in combination with the P7S-14F-END/14P-E.



Precautions for Correct Use

Wiring

- Use one of the following wires to connect to the P7S-14F-END.
  Stranded wire: 0.75 to 1.5 mm^2
  Solid wire: 1.0 to 1.5 mm^2
- Tighten each screw of the P7S-14F-END to a torque of 0.78 to 0.98 N·m.
- Wire the terminals correctly with no mistakes in coil polarity, otherwise the G7S will not operate.
- If you use the P7S-14F-END, the release time of the G7S will be longer because the P7S-14F-END has a built-in diode to absorb coil surge. Confirm operation under actual conditions before you use the P7S-14F-END.

Cleaning

The G7S is not of enclosed construction. Therefore, do not wash the G7S with water or detergent.

Mounting

The G7SA can be installed in any direction.

Terms and Conditions Agreement

Read and understand this catalog.
Please read and understand this catalog before purchasing the products. Please consult your OMRON representative if you have any questions or comments.

Warranties.
(a) Exclusive Warranty. Omron's exclusive warranty is that the Products will be free from defects in materials and workmanship for a period of twelve months from the date of sale by Omron (or such other period expressed in writing by Omron). Omron disclaims all other warranties, express or implied.
(b) Limitations. OMRON MAKES NO WARRANTY OR REPRESENTATION, EXPRESS OR IMPLIED, ABOUT NON-INFRINGEMENT, MERCHANTABILITY OR FITNESS FOR A PARTICULAR PURPOSE OF THE PRODUCTS. BUYER ACKNOWLEDGES THAT IT ALONE HAS DETERMINED THAT THE
PRODUCTS WILL SUITABLY MEET THE REQUIREMENTS OF THEIR INTENDED USE.
Omron further disclaims all warranties and responsibility of any type for claims or expenses based on infringement by the Products or otherwise of any intellectual property right. (c) Buyer Remedy. Omron's sole obligation hereunder shall be, at Omron's election, to (i) replace (in the form originally shipped with Buyer responsible for labor charges for removal or replacement thereof) the non-complying Product, (ii) repair the non-complying Product, or (iii) repay or credit Buyer an amount equal to the purchase price of the non-complying Product; provided that in no event shall Omron be responsible for warranty, repair, indemnity or any other claims or expenses regarding the Products unless Omron's analysis confirms that the Products were properly handled, stored, installed and maintained and not subject to contamination, abuse, misuse or inappropriate modification. Return of any Products by Buyer must be approved in writing by Omron before shipment. Omron Companies shall not be liable for the suitability or unsuitability or the results from the use of Products in combination with any electrical or electronic components, circuits, system assemblies or any other materials or substances or environments. Any advice, recommendations or information given orally or in writing, are not to be construed as an amendment or addition to the above warranty.
See http://www.omron.com/global/ or contact your Omron representative for published information.

Limitation on Liability; Etc.
OMRON COMPANIES SHALL NOT BE LIABLE FOR SPECIAL, INDIRECT, INCIDENTAL, OR CONSEQUENTIAL DAMAGES, LOSS OF PROFITS OR PRODUCTION OR COMMERCIAL LOSS IN ANY WAY CONNECTED WITH THE PRODUCTS, WHETHER SUCH CLAIM IS BASED IN CONTRACT, WARRANTY, NEGLIGENCE OR STRICT LIABILITY.
Further, in no event shall liability of Omron Companies exceed the individual price of the Product on which liability is asserted.

Suitability of Use.
Omron Companies shall not be responsible for conformity with any standards, codes or regulations which apply to the combination of the Product in the Buyer's application or use of the Product. At Buyer's request, Omron will provide applicable third party certification documents identifying ratings and limitations of use which apply to the Product. This information by itself is not sufficient for a complete determination of the suitability of the Product in combination with the end product, machine, system, or other application or use. Buyer shall be solely responsible for determining appropriateness of the particular Product with respect to Buyer's application, product or system. Buyer shall take application responsibility in all cases.
NEVER USE THE PRODUCT FOR AN APPLICATION INVOLVING SERIOUS RISK TO LIFE OR PROPERTY OR IN LARGE QUANTITIES WITHOUT ENSURING THAT THE SYSTEM AS A WHOLE HAS BEEN DESIGNED TO ADDRESS THE RISKS, AND THAT THE OMRON PRODUCT(S) IS PROPERLY RATED AND INSTALLED FOR THE INTENDED USE WITHIN THE OVERALL EQUIPMENT OR SYSTEM.

Programmable Products.
Omron Companies shall not be responsible for the user's programming of a programmable Product, or any consequence thereof.

Performance Data.
Data presented in Omron Company websites, catalogs and other materials is provided as a guide for the user in determining suitability and does not constitute a warranty. It may represent the result of Omron's test conditions, and the user must correlate it to actual application requirements. Actual performance is subject to the Omron's Warranty and Limitations of Liability.

Change in Specifications.
Product specifications and accessories may be changed at any time based on improvements and other reasons. It is our practice to change part numbers when published ratings or features are changed, or when significant construction changes are made. However, some specifications of the Product may be changed without any notice. When in doubt, special part numbers may be assigned to fix or establish key specifications for your application. Please consult with your Omron's representative at any time to confirm actual specifications of purchased Product.

Errors and Omissions.
Information presented by Omron Companies has been checked and is believed to be accurate; however, no responsibility is assumed for clerical, typographical or proofreading errors or omissions.

2023.5

In the interest of product improvement, specifications are subject to change without notice.

OMRON Corporation
Industrial Automation Company

http://www.ia.omron.com/

(c)Copyright OMRON Corporation 2023 All Right Reserved.