New

OMRON

Clean Sensing System

ZN Series

Advanced Clean-Monitoring for the Manufacturing Field



realizing

Is that booth really clean?

Is clean air with a filter enough to maintain a clean environment?

Clean measures are not perfect unless they are tied to quality.

Localized Continuous Clean-Monitoring Systems by OMRON provide many ways to improve quality and enable perfect reporting of production process monitoring.



Applications

Electronic Component Production Processes
Multi-Clean Control



Cell Production Processes
Direct Clean Control

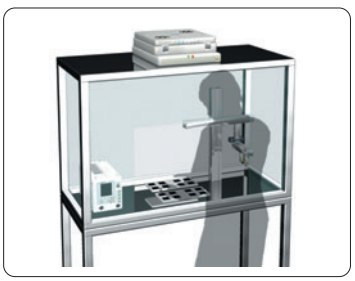

Storage and Test Environments
Storage of Precision and Optical Components





Clean-monitoring of Inspection and Measurement Environments



Total Sensing for Clean Booths

OMRON provides the optimum clean environment with constant monitoring of continuously changing production environments. Sensing and control with up to 9 Air Clean Units. The degree of cleanliness in each production stage can be controlled in relation to quality.

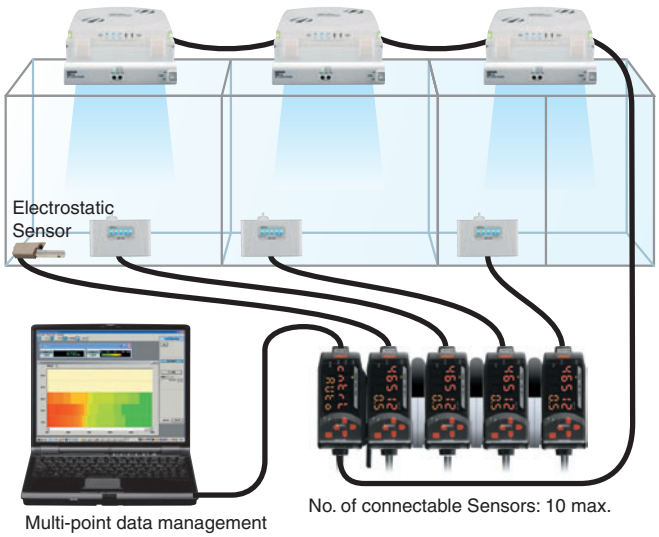

Continuous Sensing of Particles

Clean environments change during the production process due to the various work operations performed.



The particle volume inside booths is constantly sensed by an Air Particle Sensor. Optimum clean environments are maintained by controlling air volume based on particle volume — from rapid ventilation to energy-conserving gradational air volume control.

Rapid Feedback

The maximum and minimum air volume and feedback time can be set to any desired values. Once a cleanliness threshold has been exceeded, the level of cleanliness can be increased in a short time by applying the maximum air volume.

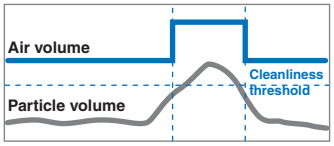

Constant Feedback

Constant feedback is provided so that the cleanliness threshold is not exceeded. A constant level of cleanliness is always maintained and energy is conserved.

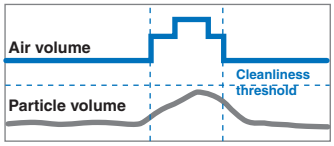

Ionized Clean Environments

An Ionizer is needed to remove dust attached to particles by static electricity. OMRON provides a new style for discharging and dust removal, with the first Ionizers in the industry that can be combined with Air Clean Units.



Compact but High-Performance Air Clean Unit



Slimmest in the industry: 97.5 mm

High-Speed Dust Control

Unique Twin-fan Construction

A unique ZNA2502 Twin-Fan construction enables both a slimmer body and a greater air volume. Downsizing is possible with a greater level of capacity than previous models.

Relationship between Air Volume and Particle Removal

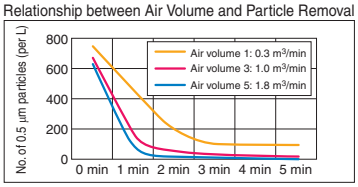

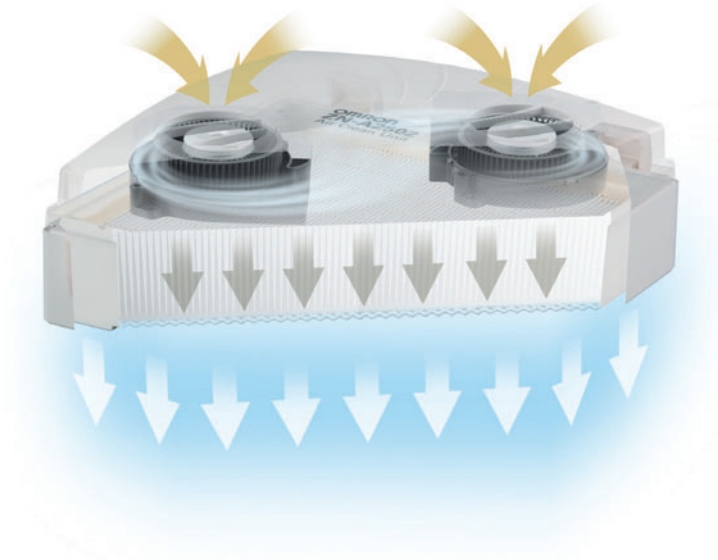

HEPA Filter with High Filtration

The HEPA filter used with the ZN Series has the capacity to filter 99.99% of 0.3 μm particles.



Laminar Airflow Design

The smaller fan section and the unique ventilation construction design provides a more uniform laminar airflow. Uniform air is provided over a wide area.

■ ZN-A2502

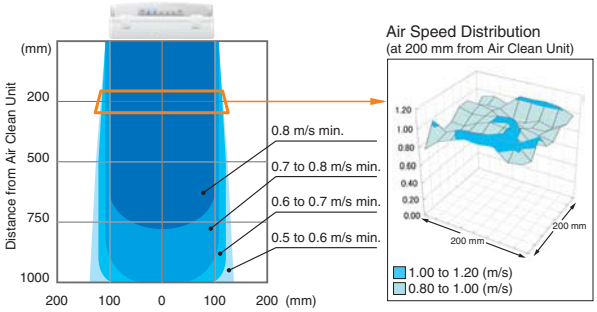

Measurement conditions: Maximum air volume

■ ZN-A4105

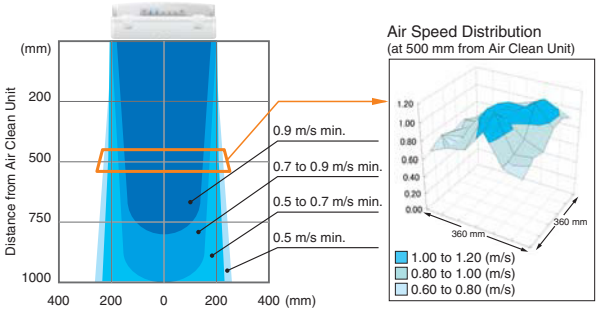

Measurement conditions: Maximum air volume

Airflow Switching Function

The air volume can be set to 5 different levels, from 0.3 to 1.8 m^3/min for the ZN-A2502 and 1.0 to 5.0 m^3/min for the ZN-A4105. The air volume can be checked with the large indicators in the middle.



Self-diagnosis Function

Two LED indicators indicate operation errors (e.g., stopped fans) and when HEPA filter replacement is required. Located on two corners of the Unit, the LED indicators are visible from many angles.



External I/O

An I/O interface is built in.
An AC adapter or 24-VDC input can be selected for the power supply.
An alarm signal is output if the self-diagnosis function indicates HEPA filter replacement or error operation.

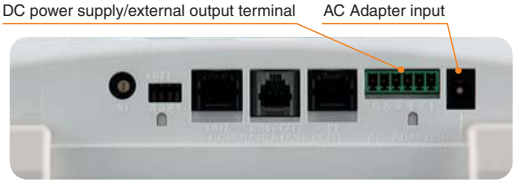

Ultra-Easy Maintenance

HEPA filters can be replaced without tools thanks to the use of buckles. Onsite maintenance time is reduced because filters can be replaced in a one-step operation.



Unique and Easy
Ionizer for Air Clean Unit



Industry First

Patent pending

Ionizer That Can be Combined with Air Clean Units

Previous Model



Laminar airflow can be disrupted with bar-type Ionizers, depending on where the Ionizer is installed, and too much installation work is required.

When Using an Air Clean Unit



The Ionizer can be mounted directly to the Air Clean Unit.

Opening Constructed Not to Obstruct Laminar Airflow

The opening does not obstruct the airflow from the Air Clean Unit eliminating worries about disrupting the laminar airflow.

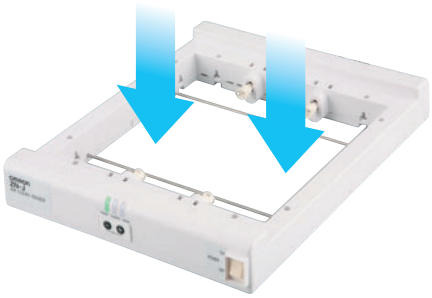

Wide Discharge Area by Adopting Variable DC Ionization Method

Variable DC ionization is used to discharge over a wide area.

■ ZN-J25A

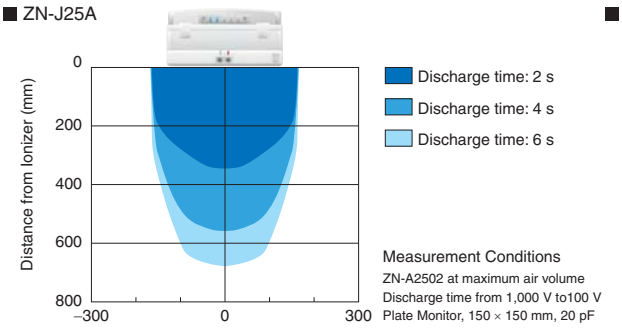

■ ZN-J41A

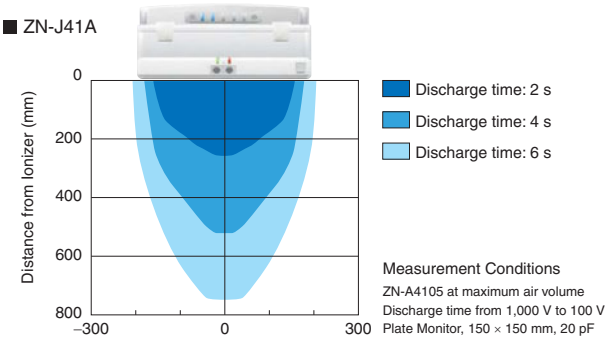

Automatic Ion Balance

Two Sensors provide constant feedback on the ion balance to maintain uniform discharging.

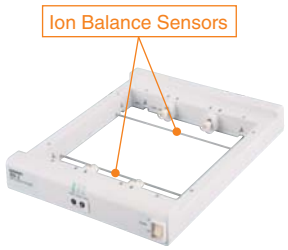

Self-diagnosis and Display Functions

LED indicators and external outputs provide notification when discharge needles require cleaning or discharge errors occur. Cleaning outputs are made at two levels: warnings and alarms.



Ozone Buildup Prevention

Patent Pending

Discharging is stopped when a signal indicating that the Air Clean Unit fan has stopped is received. This function prevents ozone from remaining due to discharging.



Simple Mounting and Wiring

The Ionizer can be installed easily by inserting it between the Air Clean Unit and the top of the Clean Booth and securing it with screws. Wiring work is greatly reduced by the connectors used for connection to the Air Clean Unit.



Simple Maintenance

Discharge needles are modular and can be easily replaced.



Small Size, Continuous Measurement In-line Air Particle Sensor



Smallest in the Industry

Air Particle Sensor for In-line Measurement

A high-performance fan for external air suction enables constant measuring over long periods. Semiconductor lasers and high-sensitivity optical design in the sensing section enable measurement of 0.3-μm particles.

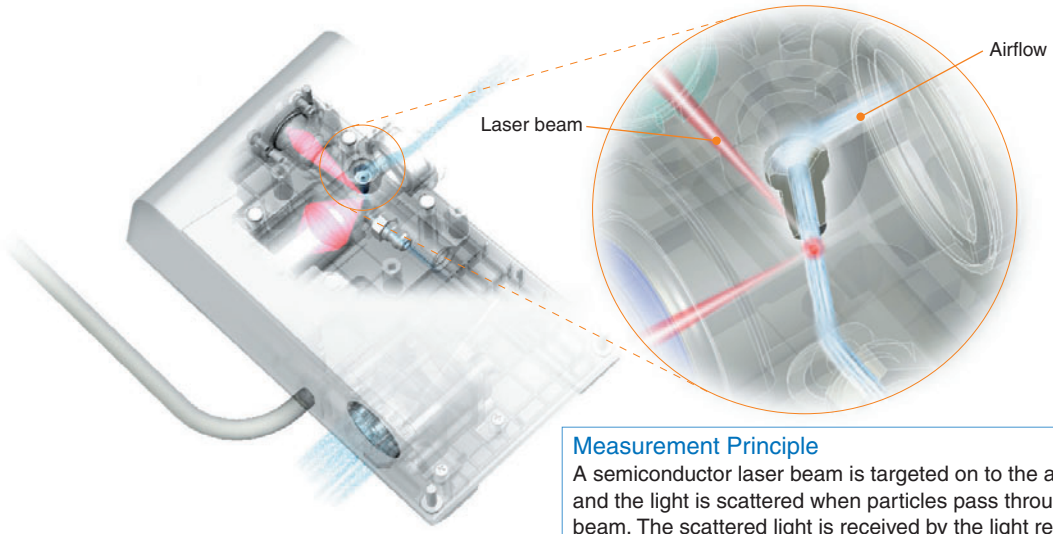

Measurement Principle
A semiconductor laser beam is targeted on to the air intake and the light is scattered when particles pass through that beam. The scattered light is received by the light receiving element and converted to an electrical signal.

Particle Trend Indicator

The sensing section has a particle trend display for quick visual confirmation of the degree of cleanliness. The Amplifier provides numeric indication of the number of 0.3-, 0.5-, and 1.0-μm particles.
A signal can be output at any level of particles if a threshold has been set.

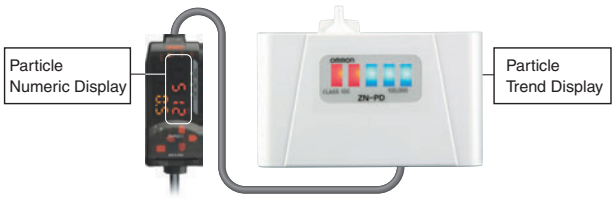

On-screen Indication and Data Logging of Particle Amount

Measurement values can be easily logged on a personal computer by using the Interface Unit and special software (sold separately).
Data from sequential sensing of particles can be used to improve quality.



Realtime Clean Air Monitor

A variety of displays (including color graphs for visual confirmation by color of particle densities, indication of the number of particles, and trend graphs) can be set. Particle Sensors and Interface Units can also be set from the personal computer. Measurement data is logged in realtime and can be manipulated in CSV-format files using spreadsheet software.



Quality Control with Multi-point Measurement Patent Pending

Up to ten Particle Sensors and up to nine Air Clean Units can be controlled through one Interface Unit and Real Time Clean Air Monitor. There are no time-consuming restrictions, such as the order that power is turned ON. The level of cleanliness can be controlled for each process and constant monitoring is possible in relation to quality data.

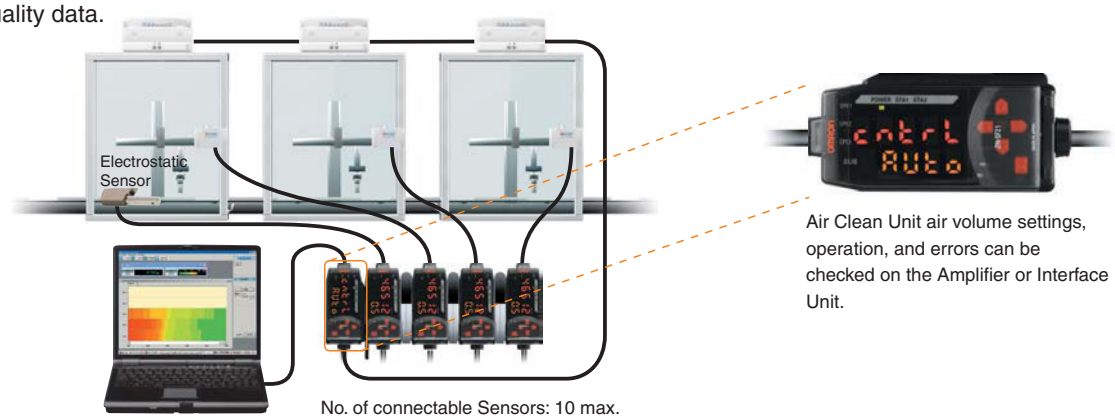

Air Clean Unit air volume settings, operation, and errors can be checked on the Amplifier or Interface Unit.

No. of connectable Sensors: 10 max.

Multi-point data output

For In-line Applications

Installation is simple with DIN Track mounting.
The In-line Air Particle Sensor was developed for in-line applications, with a 24-VDC power supply.
External outputs can be at two levels: warnings and alarms.
Suitable for in-line trend management applications.



System Connection Diagram

There are four ways of using the In-line Air Particle Sensor, depending on the application.

Measurement and Logging of Particle Volumes

- Particle volumes are logged and warnings or alarms are output for set thresholds.

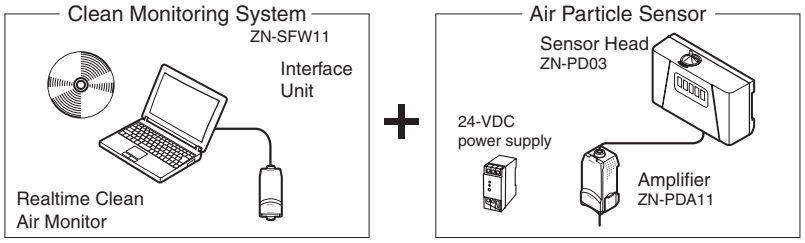

Clean Air Supply and Discharging

- Discharging can be performed with the downflow from the Air Clean Unit.

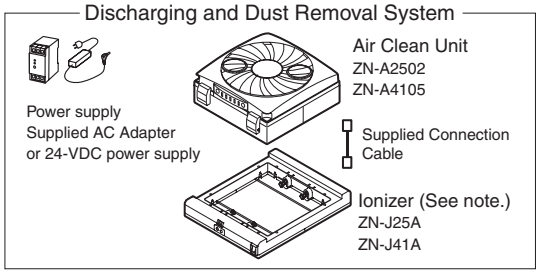

Note: When using the Ionizer in combination with an Air Clean Unit, be sure to specify an applicable model (e.g., ZN-J25A).

Direct Clean Sensing Systems

- The air volume of the Air Clean Unit is automatically adjusted while the particle volume is measured and logged.

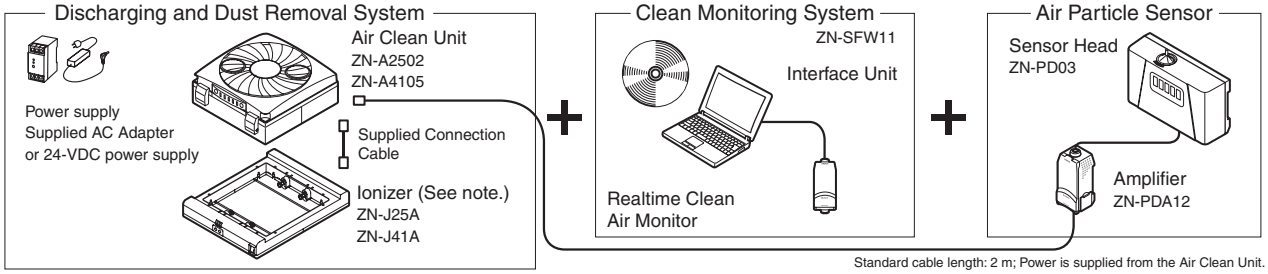

Note: When using the Ionizer in combination with an Air Clean Unit, be sure to specify an applicable model (e.g., ZN-J25A).

Standard cable length: 2 m; Power is supplied from the Air Clean Unit.

To extend, use commercially available LAN connectors (female–female, straight) and LAN cable (straight, category 5 E or better).

Multi-Clean Sensing Systems

- The air volume of the Air Clean Unit is automatically adjusted while the particle volume is measured and logged.
- The level of cleanliness can be managed and feedback controlled for more than one production process.

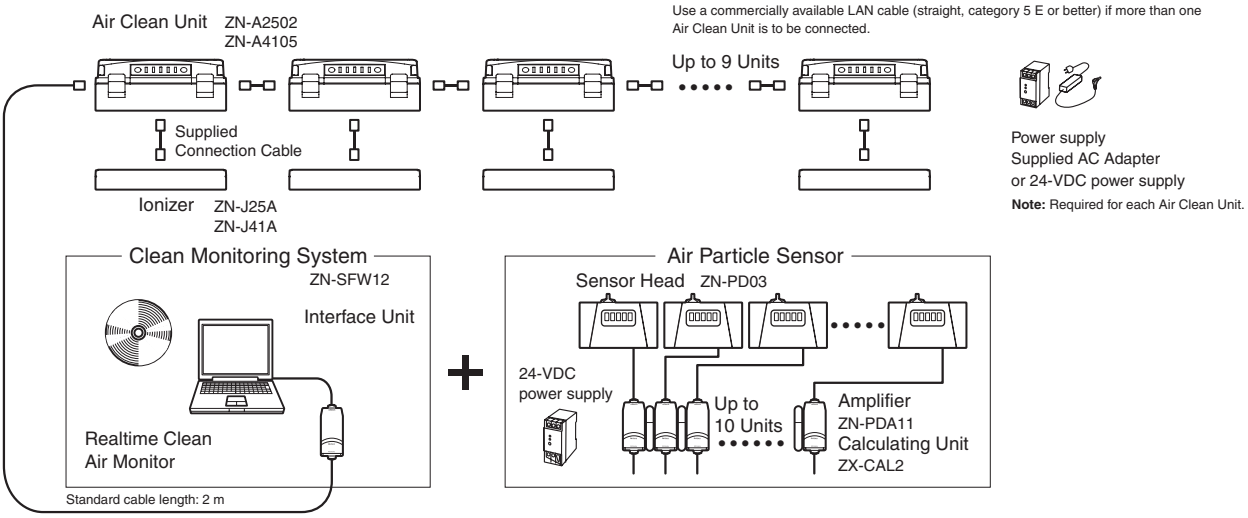

Standard cable length: 2 m

To extend, use commercially available LAN connectors (female–female, straight) and LAN cable (straight, category 5E or better).

Ordering Information

Air Clean Units

Air Clean Units

Appearance	Application	Power supply	Model
	250 × 250 mm	24 VDC	ZN-A2502
			ZN-A2502D (See note.)
	410 × 410 mm		ZN-A4105
			ZN-A4105 (See note.)

Use a commercially available LAN cable (straight, category 5E or better) if more than one Air Clean Unit is to be connected to make a system.

Note: Without AC adapter.

Accessories

	Application	Model	Qty.
Replacement HEPA Filters	For 250 × 250 mm	ZN9-AHP25	1
	For 410 × 410 mm	ZN9-AHP41	1
Replacement Pre-filters	For 250 × 250 mm	ZN9-APF25	2
	For 410 × 410 mm	ZN9-APF41	1

Ionizers

Ionizers

Appearance	Application	Power supply	Model
	250 × 250 mm	Supplied from the Air Clean Unit.	ZN-J25A (See note.)
	410 × 410 mm		ZN-J41A (See note.)

Note: Connection Cable to the Air Clean Unit is provided. (Air Clean Units should be ordered separately.)

Accessories

	Model	Qty.
Replacement Discharge Needles	ZN9-JH04	4 per pack

Single-sided Connector Cables (for DC power supply or I/O connection)

Cable length	Model	Qty.
2 m	ZN9-JC02	1

Air Particle Sensors

Sensor Head

Appearance	Measured particle diameter	Model
	0.3, 0.5, and 1.0 μm	ZN-PD03

Amplifiers

Appearance	Power supply	Connection method	Model
	24 VDC	Cable connection	ZN-PDA11 2M
	Supplied from the Air Clean Unit.	Connector connection (Air Clean Unit feedback connection)	ZN-PDA12 2M

Calculating Unit

Appearance	Model
	ZX-CAL2

Clean Monitoring Systems

Appearance	Contents	Connection method	Model
 + CD-ROM	ZN-SF11 Interface Unit + Realtime Clean Air Monitor	For RS-232C connection with personal computer only	ZN-SFW11
 + CD-ROM	ZN-SF12 Interface Unit + Realtime Clean Air Monitor	For RS-232C connection with personal computer or Air Clean Unit feedback connection	ZN-SFW12

An Interface Unit is not available by itself.

Double-sided Connector Cable (for extension between Sensor Head and Amplifier)

Cable length	Model	Qty.
1 m	ZX-XC1A	1
4 m	ZX-XC4A	1
8 m	ZX-XC8A	1

	Model	Qty.
Sensor Head Replacement Filter Set	ZN9-PF1	1
Cleaning Filter	ZN9-PC1	1
Head Attachment Tool	ZN9-PB1	1

Specifications

Air Clean Units

Item / Model	ZN-A2502/A2502D	ZN-A4105/A4105D
Air outlet dimension	225 × 205 mm	360 × 360 mm
Particle outlet efficiency	More than 99.99% for 0.3-µm particles	
Air volume (m^3/min)	0.3 to 1.8 m^3/min (typical)	1.0 to 5.0 m^3/min (typical)
Sound noise level (dBA)	Air volume level 3: 53 dB (typical) Air volume level 1: 41 dB (typical)	Air volume level 3: 53 dB (typical) Air volume level 1: 40 dB (typical)
Fan motor	Two, DC brushless compact centrifugal blowers	One DC brushless turbo fan
Main filter	HEPA filter	
Main filter part number	ZN9-AHP25	ZN9-AHP41
Pre-filter part number	ZN9-APF25	ZN9-APF41
Power supply voltage	24 VDC±10%, Ripple (p-p): 10% max.	
Current consumption	Air volume level 5: 2.1 A max. (RMS value) Air volume level 1: 0.4 A max. (RMS value)	Air volume level 5: 3.5 A max. (RMS value) (Peak: 5.5 A) Air volume level 1: 0.32 A max. (RMS value)
Indicators	Operating status: Green/Red Air volume: Blue	
Outputs	Alarm output 1: Alarm output 1 turns OFF when one of the following events occurs. (Normally alarm output 1 is ON.) (Check indicator to find out which event occurred.) • Filter is clogged. • Fan error • Cleaning alarm for discharge needle (when ZN-J-series Ionizer (sold separately) is connected) • Discharge error (when ZN-J-series Ionizer (sold separately) is connected) Alarm output 2: Enabled only when ZN-J-series Ionizer (sold separately) is connected. • Alarm output 2 turns OFF to indicate that cleaning is necessary for ZN-J Series discharge needles. (Normally alarm output 2 is ON.)	
	30 VDC, 50 mA max. Residual voltage: 1 V max. with load current of 10 mA, 2 V max. with load current of 50 mA.	
Functions	Air volume selectable (levels 1 to 5), Automatic control by ZN-PDA, Filter clogging alarm, ZN-J Ionizer connection, connection of up to 9 Units	
Ambient temperature range	Operating and storage: 0 to 40°C (with no icing or condensation)	
Ambient humidity range	Operating and storage: 35% to 85% (with no condensation)	
Material	Upper case: ABS, Bottom frame: Steel	
Dimensions (mm)	250 × 250 × 97.5 mm (W × D × H)	410 × 410 × 129.5 mm (W × D × H)
Weight	Approx. 2 kg (Packed state: Approx. 3.3 kg)	Approx. 5.2 kg (Packed state: Approx. 8.6 kg)
Accessories	Instruction Sheet, Sealing parts, Mounting screws, I/O connector (XW4B-06B1-H1), AC adapter (excluding ZN-A2502D, ZN-A4105D.) (See note.)	

Note: AC Adapter: Made by Sanken Electric Co., Ltd.
Model SEB100P2-24.0 for ZN-A2502: Supply voltage of 100 VAC to 240 VAC
Model SEC165P2-24.0 for ZN-A4105: Supply voltage of 100 VAC to 240 VAC

Ionizers

Item / Model	ZN-J25A	ZN-J41A
Applicable Air Clean Units	ZN-A2502	ZN-A4105
Power supply voltage	24 VDC±10%, Ripple (p-p): 10% max.	
Current consumption	300 mA max	
Output voltage	±7 kV max	
Discharge method	Variable DC	
Discharge time (typical) (See note 1.)	5 s max.	
Ion balance (typical) (See note 2.)	±30 V max.	
Indicators	Power (green), Cleaning notice (orange flashing), Cleaning alarm (orange), High voltage error (red)	
Outputs	High voltage error output, cleaning output: photo-MOS relay (30 VDC, 300 mA max.)	
Functions	Manual Ion balance adjustment, cleaning alarm, high voltage error alarm	
Ambient temperature range	Operating and storage: 0 to 40°C (with no icing or condensation)	
Ambient humidity range	Operating and storage: 35% to 65% (with no condensation)	
Materials	Unit: ABS, Discharge needles: Tungsten	
Dimensions (mm)	248 × 310 × 45 mm (W × D × H)	408 × 470 × 45 mm (W × D × H)
Weight	Approx. 0.6 kg (Packed state: Approx. 1.4 kg)	Approx. 1.5 kg (Packed state: Approx. 2.7 kg)
Accessories	Instruction Sheet Sealing parts Mounting screws Connector cable for Air Clean Unit (excluding ZN-A2502D, ZN-A4105D.) Ferrite core English warning label	Instruction Sheet Sealing parts Mounting screws Connector cable for Air Clean Unit (excluding ZN-A2502D, ZN-A4105D.) Ferrite core English warning label

Note 1. Measurement conditions:
Distance: 300 mm
Air Clean Unit: ZN-A Series with air level 5 at center of air outlet
Discharging from ±1000 V to ±100 V with Charge Plate Monitor (150 × 150 mm, 20 pF)
Temperature: 18 to 28°C, Humidity: 35% to 65%
The performance may not be satisfied when gases such as solvents are in the measurement area.
2. Measurement conditions:
Distance: 300 mm
Air Clean Unit: ZN-A Series with air level 5 at center of air outlet
Discharging with Charge Plate Monitor (150 × 150 mm, 20 pF) for 10 s
Temperature: 18 to 28°C, Humidity: 35% to 65%
The performance may not be satisfied when gases such as solvents are in the measurement area.

Specifications

Air Particle Sensors

Sensor Head

Item / Model	ZN-PD03
Applicable Amplifier	ZN-PDA11/ZN-PDA12
Measurement method	90° sideways light-scattering method
Light source	Semiconductor laser
Applicable particle size	0.3, 0.5, or 1.0 μm min.
Applicable cleanliness class	Equivalent to Class 100 to 100,000 (FED-STD-209D)
Indicator	Level indicator for Class 100 to 100,000 (FED-STD-209D)
Connection tube	Inner diameter: 4, Length: 1 m max.
Ambient temperature range	Operating: 0 to 40°C, Storage: −15 to 50°C (with no icing or condensation)
Ambient humidity range	Operating and storage: 35% to 85% (with no condensation)
Dielectric strength	1,000 VAC, 50/60 Hz for 1 min
Vibration resistance	10 to 55 Hz, 0.7-mm double amplitude 80 min each in X, Y, and Z directions
Shock resistance	150 m/s² 3 times each in six directions (up/down, left/right, forward/backward)
Connection method	Connector cable (standard cable length: 0.5 m)
Material	ABS
Weight	Approx. 300 g (Packed state: Approx. 450 g)
Accessories	Instruction Sheet, connection tube

Amplifiers

Item / Model	ZN-PDA11	ZN-PDA12
Sampling time	1 to 599 s (selectable)	
Average count setting	1, 2, 4, 8, 16, 32, or 64	
Indicators	Operation indicators: OUT1 (orange), OUT2 (yellow), 7-segment main display (red), 7-segment sub-display (yellow), power (green), wide range display (green), unit selection display (green)	7-segment main display (red), 7-segment sub-display (yellow), power (green), wide range display (green), unit selection display (green)
Status outputs (2 outputs: OUT1/OUT2) (See note.)	NPN open-collector outputs, 30 VDC, 30 mA max., Residual voltage: 1.2 V max.	---
Reset input (See note.)	ON: Short-circuited with 0-V terminal or 1.5 V or less, OFF: Open	---
Functions	Measurement result display, Setting value display, Unit selection, Scaling, Peak hold, Hysteresis setting, Threshold level selection, Wide range display, Key lock, ECO mode, Display reverse, Display digit change, Initialize	Measurement result display, Communications condition display, Unit selection, Scaling, Air Clean Unit automatic control, Air Clean Unit air level change, Threshold level selection, Wide range display, Key lock, ECO mode, Display reverse, Display digit change, Initialize
Communications with Air Clean Unit	---	Unique communications specifications (RJ-45 connector and straight LAN cable)
Power supply voltage	24 VDC ±10%, Ripple (p-p): 10% max.	24 VDC ±10%, Ripple (p-p): 10% max. (Supplied from Air Clean Unit.)
Current consumption	300 mA max.	
Ambient temperature range	Operating: 0 to 40°C , Storage: −15 to 50°C (with no icing or condensation)	
Ambient humidity range	Operating and storage: 35% to 85% (with no condensation)	
Insulation resistance	20 MΩ min. at 500 VDC	
Dielectric strength	1,000 VAC, 50/60 Hz for 1 min	
Vibration resistance	10 to 150 Hz, 0.7-mm double amplitude 80 min each in X, Y, and Z directions	
Shock resistance	300 m/s² 3 times each in six directions (up/down, left/right, forward/backward)	
Connection method	Cable (standard cable length: 2 m)	Connector cable (standard cable length: 2 m)
Materials	Case: PBT (polybutylene terephthalate), Cover: Polycarbonate	
Weight	Approx. 180 g (Packed state: Approx. 350 g)	
Accessories	Instruction Sheet	

Note: OUT2 and the reset input are switched by using the DIP switch on the bottom of the Amplifier.

Clean Monitoring Systems

Item / Model		ZN-SFW11	ZN-SFW12
Power supply voltage		Supplied from the ZN-PDA.	
Current consumption		45 mA max. with 24-VDC power supply voltage (excluding current consumption and current output of the Amplifier)	
Applicable Amplifiers		ZX Series, ZJ-SD Series, ZN-PD Series	
Applicable Amplifier Unit software versions		ZX-LDA□□-N V1.000 or higher, ZX-EDA□□ V1.300 or higher, ZX-TDA□□ V1.100 or higher, ZJ-SDA□□ V1.000 or higher, or ZN-PDA□□ V1.000 or higher	
No. of connectable Amplifiers		10 max. (For ZN-PDA)	
Indicator		Power: Green, Sensor communications: Green, Sensor communications error: Red, External terminal communications: Green, External terminal communications error: Red	Power (POWER: Green), Serial communications (STA1: Green) Not clean (OPE1: Orange), Clean (OPE2: Green)
Functions		---	Automatic control for Air Clean Units (multi-unit system control), Air level change for Air Clean Units
Communications	Communications port	RS-232C (9-pin, D-Sub connector)	
	Protocol	CompoWay/F	
	Baud rate	38,400 bps	
	Data configuration	Data bits: 8, Parity: None, Start bits: 1, Stop bits: 1, Flow control: None	
	For external device 2	---	Unique communications specifications (RJ-45 connector and straight LAN cable)
Ambient temperature range		Operating: 0 to 40°C, Storage: −15 to 50°C (with no icing or condensation)	
Ambient humidity range		Operating and storage: 35% to 85% (with no condensation)	
Insulation resistance		20 MΩ min. at 500 VDC	
Dielectric strength		1,000 VAC, 50/60 Hz for 1 min	
Vibration resistance		10 to 150 Hz, 0.7-mm double amplitude 80 min each in X, Y, and Z directions	
Shock resistance		300 m/s² 3 times each in six directions (up/down, left/right, forward/backward)	
Connection method		---	Connector cable (standard cable length: 2 m)
Materials		Case: PBT (polybutylene terephthalate), Cover: Polycarbonate	
Weight		Approx. 100 g (Packed state: Approx. 480 g)	Approx. 200 g (Packed state: Approx. 550 g)
Accessories		CD-ROM (Realtime Clean Air Monitor), Instruction Sheet, Two clamps	

Dimensions

Air Clean Units

ZN-A2502/A2502D

(Unit: mm)

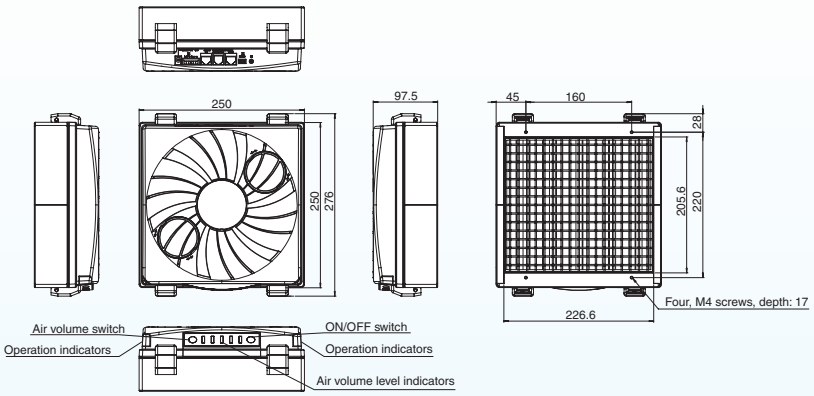

ZN-A4105/A4105D

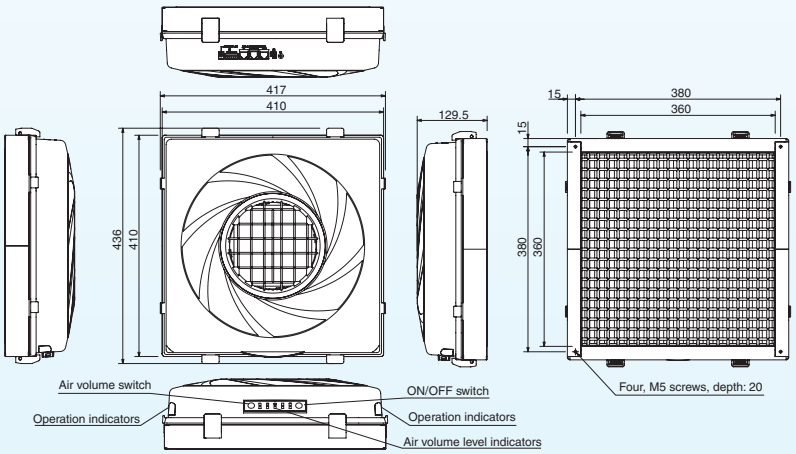

Ionizers

ZN-J25A

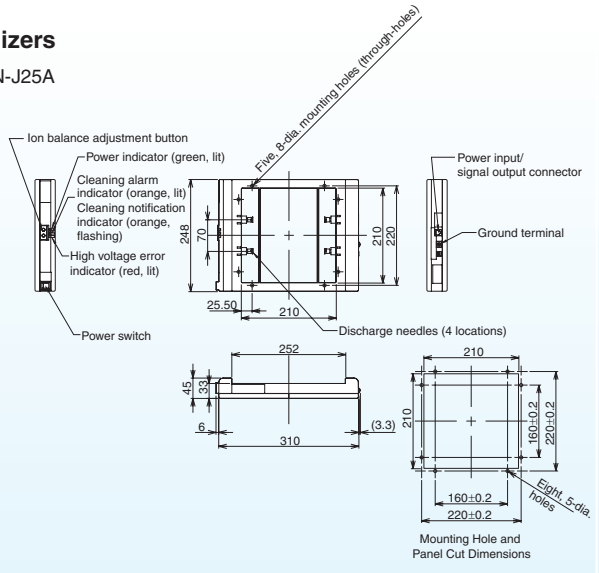

ZN-J41A

(Unit: mm)

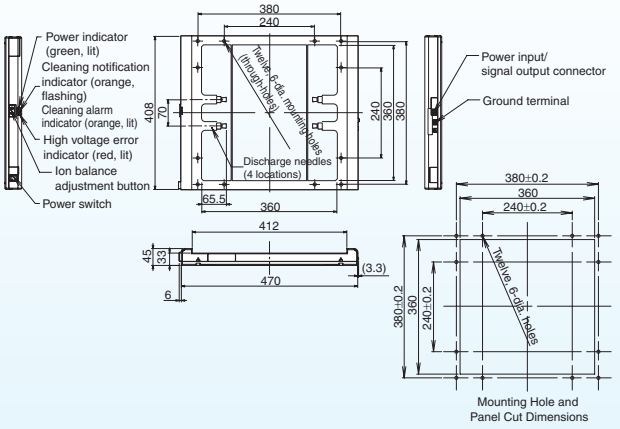

Dimensions

Air Particle Sensors

ZN-PD03

(Unit: mm)

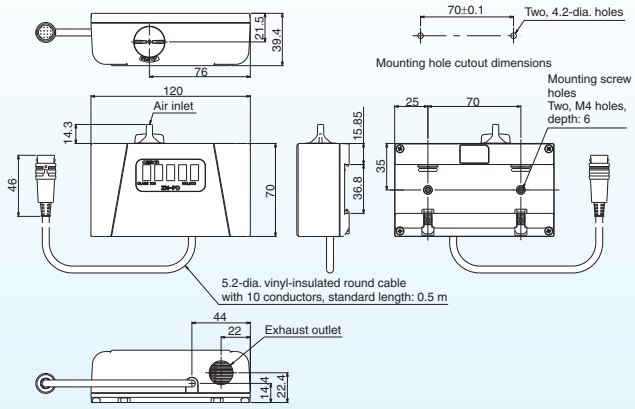

Sensor Head Mounting Tool
When ZN9-PB1 is used (sold separately)

(Unit: mm)

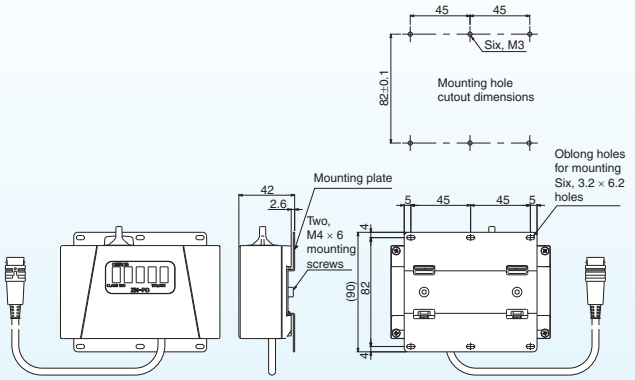

ZN-PDA11

(Unit: mm)

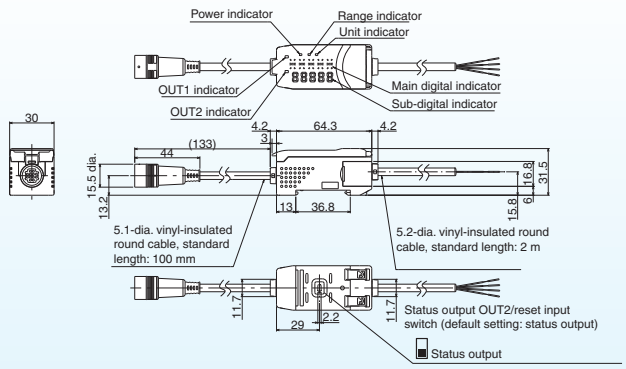

ZN-PDA12

(Unit: mm)

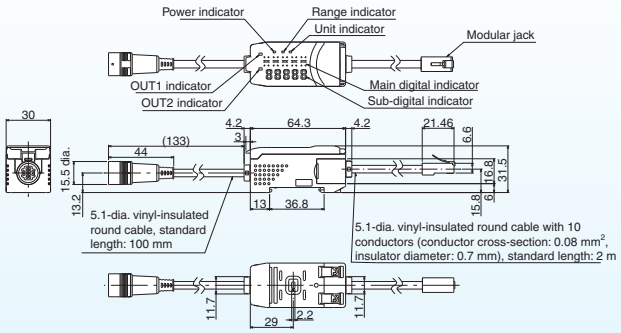

Interface Unit

ZN-SF11

(Unit: mm)

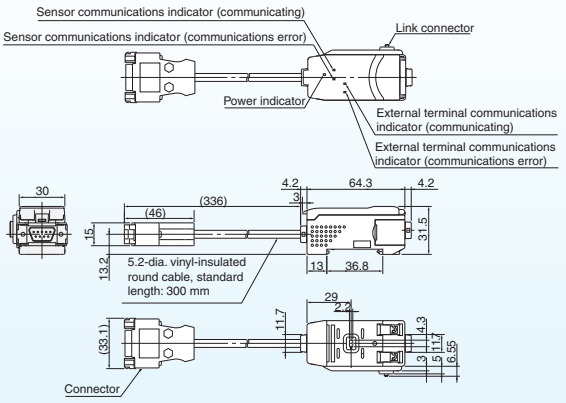

ZN-SF12

(Unit: mm)

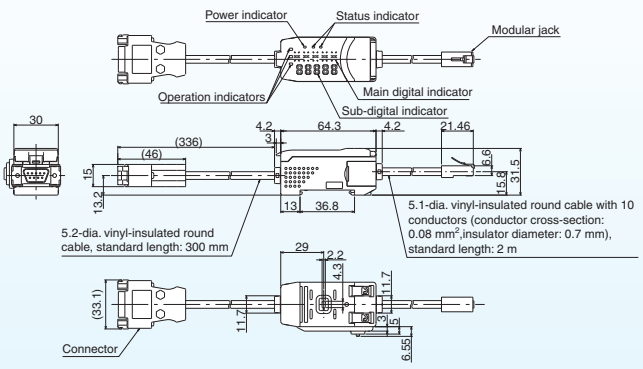

This document provides information mainly for selecting suitable models. Please read the document System Manual (Z267) carefully for information that the user must understand and accept before purchase, including information on warranty, limitations of liability, and precautions.

OMRON Corporation
Industrial Automation Company
Sensing Devices Division H.Q.
Application Sensors Division
Shiokoji Horikawa, Shimogyo-ku,
Kyoto, 600-8530 Japan
Tel: (81) 75-344-7068/Fax: (81) 75-344-7107

Regional Headquarters
OMRON EUROPE B.V.
Sensor Business Unit
Carl-Benz-Str. 4, D-71154 Nufringen,
Germany
Tel: (49) 7032-811-0/Fax: (49) 7032-811-199

OMRON ELECTRONICS LLC
One Commerce Drive Schaumburg,
IL 60173-5302 U.S.A.
Tel: (1) 847-843-7900/Fax: (1) 847-843-7787

OMRON ASIA PACIFIC PTE. LTD.
No. 438A Alexandra Road # 05-05/08 (Lobby 2),
Alexandra Technopark, Singapore 119967
Tel: (65) 6835-3011/Fax: (65) 6835-2711

OMRON (CHINA) CO., LTD.
Room 2211, Bank of China Tower,
200 Yin Cheng Zhong Road,
PuDong New Area, Shanghai, 200120, China
Tel: (86) 21-5037-2222/Fax: (86) 21-5037-2200

Authorized Distributor:

In the interest of product improvement,
specifications are subject to change without notice.

CSM_1_5_0715
Cat. No. E383-E1-01
Printed in Japan

OMRON Industrial Automation Global: **www.ia.omron.com**