Product Specification Sheet

OMRON

☐ For confirmation ☐ For estimate Spec sheet No. : OMB - G6D - 04002B (1/7)

☐ For meeting ☐ For reference Issued on : 09/11/2004

Prepared by	Checked by	Approved by
SHAHARUDIN		

CUSTOMER : _____

PRODUCT NAME : **PCB POWER RELAY**

TYPE : **G6D - 1A - ASI**

SPECIFICATION : **DC STANDARD**

Attached is a specification sheet for your perusal. Please examine it carefully, and upon confirmation, send one copy back to our company by _____

For receipt confirmation stamp

Specification sheet No. _____

Record of revisions (for use by Omron only)

Copies sent to	No.of copies	Code	Date of revision	Description of revision
Customer		A	24/03/2005	Add. TUV no. at safety standard approval
Marketing ( )		B	12/04/2005	Correction weight

OMRON CORPORATION
OMRON MALAYSIA SDN BHD

The units and figures in brackets { } are for reference only.

(Optional items are indicated by a check mark ☐) Spec. Sheet No.: OMB - G6D - 04002B (2/7)

1. CLASSIFICATION **PC BOARD USE RELAY**

2. CONSTRUCTION

2.1	Outline drawing	Drawing No.	**2483867 - 0**
2.2	Structure drawing	Drawing No.	**-**
2.3	Contact structure		**SPST - NO**
2.4	Contact configuration		**SINGLE**
2.5	Contact material	Surface material	- Base material **AgSnIn**
2.6	Protective construction	[x] Plastic seal	[ ] Flux protection [ ] -

3. STANDARDS

3.1 Approved by standard (s)

UL	**File No. : E41515**
CSA	**File No. : LR31928**
TUV	**File No. : R 50029064**

△A

4. RATINGS

4.1 Operating coil [x] Refer to Table 1 (Initial values)

(1) Rated voltage and frequency - V - Hz)

(2) [ ] Rated current [ ] Setting current - mA ± % (at - V - Hz)

[ ] Resetting current - mA ± % (at - V - Hz)

(3) [ ] Coil Resistance [ ] Setting resistance - Ω ± - %

[ ] Resetting resistance - Ω ± - %

(4) Operate voltage - ~ - % of rated voltage

(5) Rated power consumption Approx. - W

4.2 Contact ratings

(1) Rated load

Resistive load	AC	**250** V	**5** A
	DC	**30** V	**5** A
Inductive load	AC	**250** V	**2** A (P.f = **0.4**)
	DC	**30** V	**2** A (L/R = **7** ms)

(2) Rated carry current **5** A

(3) Maximum rated voltage AC **250** V DC **30** V

(4) Maximum rated current AC **5** A, DC **5** A

AC **2** A, (P.f = **0.4**)

DC **2** A, (L/R = **7** ms)

(5) Maximum switching capacity

Resistive load AC **1250** VA DC **150** W
Inductive load AC **500** VA (P.f = **0.4**)
DC **60** W (L/R = **7** ms)

(6) Minimum permissible load (Reference values)

P level (λ 60 = 0.1 x 10^{-6} ops)
Condition : Resistive load **DC 5** V **10** mA
Operation Frequency 7200 ops/hr.

5. CHARACTERISTIC (Initial values)

5.1 Contact resistance

100 mΩ MAX.
[x] Measured by the voltage drop method with **DC 5** V **1** A applied
[ ] Measured by -

5.2 [x] Operating voltage [ ] Setting voltage

- V MAX.
[x] Refer to Table 1

5.3 [x] Releasing voltage [ ] Resetting voltage

- V MIN.
[x] Refer to Table 1

5.4 [x] Operating time [ ] Setting time

10 ms MAX. (when operated with the rated voltage)

5.5 [x] Releasing time [ ] Resetting time

5 ms MAX. (when operated with the rated voltage)

5.6 Insulation resistance ([x] 500 VDC [ ] 250 VDC)

(1)	Between coil terminals and contact terminals	**1000** MΩ MIN.
(2)	Between non - continuous current carrying terminals	- MΩ MIN.
(3)	Between contact terminals of same polarity.	**1000** MΩ MIN.
(4)	Between set coil and reset coil.	- MΩ MIN.
(5)	Between current carrying terminal and exposed non - current carrying metal part.	- MΩ MIN.

5.7 Dielectric strength (Leakage current **3** mA 50/60Hz for 1 minute)

(1)	Between coil terminals and contact terminals.	**3000** VAC
(2)	Between non - continuous current carrying terminals.	- VAC
(3)	Between contact terminals of the same polarity.	**750** VAC
(4)	Between set coil and reset coil.	- VAC
(5)	Between current carrying terminal and exposed non - current carrying metal part.	- VAC

5.8 Temperature rise

(1) Coil

50 °C MAX. (by the coil resistance method)
Apply voltage of coil : **100** % **-** Hz of the rated voltage
Carry current of contact : **5** A

(2) Contact

65 °C MAX. (by the thermometer method)
Apply voltage of coil : **100** % **-** Hz of the rated voltage
Carry current of contact : **5** A

5.9 Vibration

(1) Mechanical durability

Must be free from any abnormality in both the construction and characteristics after the relay is subjected to a variable vibration of **1.5** mm double amplitude at vibration, frequency of **10** to **55** Hz in each direction for **2** h.

(2) Malfunction durability (When energized or set status)

Contact must not open for **1.0** ms or longer after the relay is subjected to a variable vibration of **1.5** mm double amplitude at a vibration frequency of **10** to **55** Hz for **5** min.

(When no energized or reset status)

Contacts must not open for **-** ms or longer after the relay is subjected to a variable vibration of **-** mm double amplitude at a vibration frequency of **-** to **-** Hz for **-** min.

5.10 Shock

(1) Mechanical durability

Must be free from any abnormality in both the construction and characteristics after the relay is subjected to a shock of **1000** m/s^2 in each direction **3** times.

(2) Malfunction durability (When energized or set status)

Contacts must not open for **1.0** ms or longer after the relay is subjected to a shock of **100** m/s^2 in each direction **3** times.

(When not energized or reset status)

Contacts must not open for **-** ms or longer after the relay is subjected to a shock of **-** m/s^2 in each direction **-** times.

5.11 Terminal strength

Must be free from any abnormality after a tensile stress of **9.8N** (1.0kgf) is applied to the terminal in any direction vertical to the terminal tip for **10** sec. Any deformation of the terminal by the load shall not be regarded as a mechanical damage.

5.12 Temperature resistance

(1) Heat resistance

Must be free from any abnormality in both the construction and characteristics after the relay left in a temperature of **85 ± 2°C** for **16** h and then in room temperature and humidity for **2** h.

(2) Cold resistance

Must be free from any abnormality in both the construction and characteristics after the relay left in a temperature of **-55 ± 3°C** for **72** h and then in room temperature and humidity for **2** h.

5.13 Moisture resistance

Must be free from any abnormality in both the construction and characteristics after the relay left in a humidity of **90 to 95 % RH** for **48** h at a temperature of **40 ± 2°C** , and then room temperature and humidity for **2** h. Insulation resistance, however, must be **5** MΩ MIN.

5.14	Soldering heat resistance	Must be free from any abnormality in both the construction and characteristics after the terminals are dipped into molten solder at **260 ± 10°C** for **5** sec. and then left in room temperature and humidity for **2** h.
5.15	Service life	
(1)	Mechanical Life	**20 000 000** operations MIN. (under no load at operating frequency of **18 000** ops/hr)
(2)	Electrical Life	**70 000** operations MIN. (under rated load at operating frequency of **1 800** ops/hr)
5.16	Impulse withstand voltage	Between coil ~ contact : **1.2 X 50 μ sec 10 KV MIN.** The surge voltage is the standard impulse voltage wave of ± (1.2 X 50) μ sec that is in accordance with JEC - 212 - 198.

6. STANDARD TEST CONDITION — Unless otherwise specified, the values described in this specification obtained under the following conditions as standard.

6.1	Temperature	23°C
6.2	Humidity	65% RH

7. STORAGE CONDITIONS — Use the product under the following conditions.

7.1	Temperature	[ ] -25°C to 55°C [x] -25°C to 70°C (without freezing or condensation)
7.2	Humidity	[x] 35% to 85% RH [ ] - to - % RH

7.3 Environments

(1) Use in locations where the product or container is not exposed to corrosive gas such as hydrogen sulfide gas or salty air.

(2) Use in locations where no visible dust exists.

(3) Use in locations not subject to direct sunlight.

Do not apply a load to the product which may result in the deformation of the product.

8. OPERATING CONDITION — Use the product under the following conditions.

8.1	Temperature	**-25°C** to **70°C** (without freezing or condensation)
8.2	Humidity	**5%** to **85%** RH
8.3	Mounting direction	-

8.4 Environment

(1) Use in locations where the product is not exposed to corrosive gas such as hydrogen sulfide gas or salty air

(2) Use in locations where no visible dust exists.

(3) Use in locations not subject to direct sunlight.

Do not apply a load to the product which may result in the deformation or deteration of the product.

9. CHANGES OF INDICATIONS

Specification other than the ratings, performance, structure and external dimensions and mounting dimensions are subject to change.

10. VALIDITY OF SPECIFICATION SHEET

10.1 When no confirmation is received within one year of the issuing date of this specification sheet, this specification sheet will be invalidated.

10.2 This specification sheet is valid for 3 years after the date of receiving confirmation.

11. WARRANTY PERIOD

11.1 Warranty period

1 year from the date on which the products are delivered to the location designated by the customer.

11.2 Scope of warranty

The warranty is limited only to repairs or replacement of defective parts, when Omron is responsible for the malfunctioning or defect that occurs during the warranty period.
The warranty applies only to individual products delivered by Omron. Therefore, the warranty does not cover any other damages induced by the malfunctioning of Omron products.

12. OTHERS

Coil Rating

TABLE 1 -

Item / Rated Voltage	Rated Current (mA)	Coil Resistance (Ω)	Must Operate voltage	Must Dropout voltage	Maximum voltage	Power C'sumption (mW)
			% OF RATED VOLTAGE			
5 VDC	**40**	**125**	**70 MAX**	**10 MIN**	**90~110%**	**200**
6 VDC	**33.3**	**180**				
9 VDC	**22.2**	**405**				
12 VDC	**16.7**	**720**				
18 VDC	**11.1**	**1620**				
21 VDC	**9.5**	**2205**				
24 VDC	**8.3**	**2880**				

Note :

1) The rated current and coil resistance value indicated are those at a temperature 23°C the tolerance is ± 10% for DC rated and ± 10% for rated coil resistance.
2) Operating characteristics are the value at 23°C coil temperature.
3) Operate voltage when the terminal is installed top of the relay is less than 75% of rated voltage.

12.1 When you take DC inductive load switching with micro load (about 10 to 100mA), please use diode for surge killer.
(Possibility for low down of contact reliability because of sticking of carbon.

12.2 Case Marking
Eg:

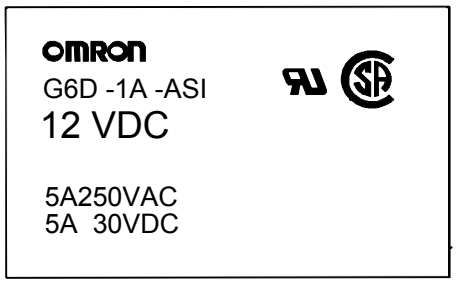

13. HANDLING CAUTIONS

13.1 Do not use ultrasonic cleaning, since it causes resonance inside the relay and can result in coil disconnection and contact sticking.

13.2 Do not drop products to avoid deterioration of the initial performance.

13.3 All terminal are not allowed to be bend more than 45º.

14. WEIGHT

14.1 Approximately 3 gram. B

15. SEAL ABILITY

15.1 A70 (For 1 minute).



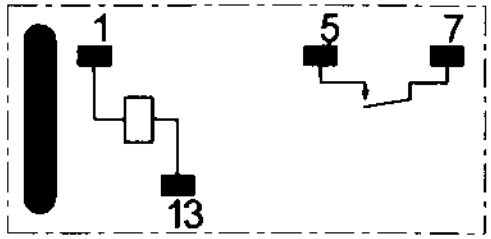

TERMINAL ARRANGEMENT/ INTERNAL CONNECTION
(BOTTOM VIEW)

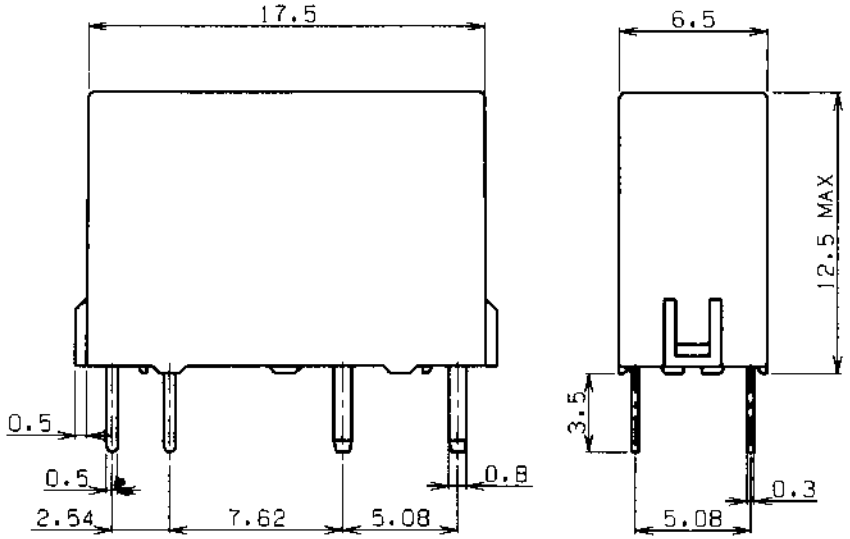

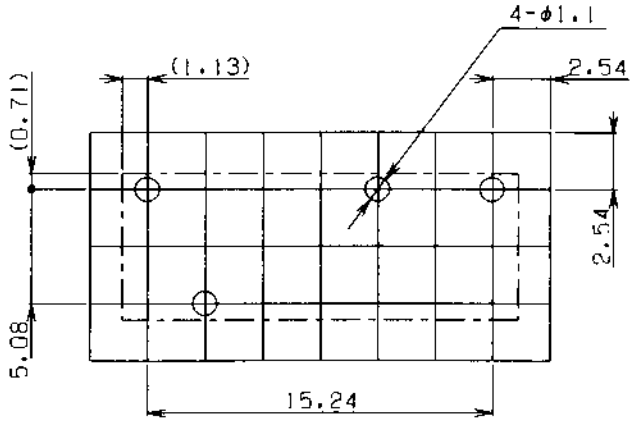

MOUNTING HOLES (BOTTOM VIEW)
TOLERANCE ±0.1

SYM	DATE	E/C CONTENT	E/C NO.	SIGN
D2	11/11/02	CONVERT TO ENGLISH DRAWING	MI-G6D-02001	SHAHA

MATERIAL
FINISH
TOLERANCE UNLESS SPECIFIED IT14

DRAWN BY	DESIGNED	CHECKED	APPROVED
11/11/02 OMB	11/11/02 OMB	06/01/2003 OMB	08/01/03 OMB
SHAHA	SHAHA	[signature]	[signature]

SCALE 3RD ANGLE
SHEET 1/1

TYPE : G6D
OUTLINE DRWG

DRWG NO. 2483867-0 D2

DESIGNED FOR M-G6D-4001

© OMRON Corporation 1998
All Right Reserved

OMRON

A4