Low Voltage Hex Inverter with Schmitt Trigger Input

74LVX14

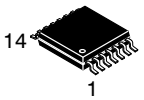

TSSOP−14
DT SUFFIX
CASE 948G

General Description

The LVX14 contains six inverter gates each with a Schmitt trigger input. They are capable of transforming slowly changing input signals into sharply defined, jitter−free output signals. In addition, they have a greater noise margin than conventional inverters.

The LVX14 has hysteresis between the positive−going and negative−going input thresholds (typically 1.0 V) which is determined internally by transistor ratios and is essentially insensitive to temperature and supply voltage variations.

The inputs tolerate voltages up to 6.5 V allowing the interface of 5 V systems to 3 V systems.

Features

- Input Voltage Level Translation From 5 V to 3 V
- Ideal For Low Power/Low Noise 3.3 V Applications
- Guaranteed Simultaneous Switching Noise Level and Dynamic Threshold Performance
- These Devices are Pb−Free and Halide Free

MARKING DIAGRAM

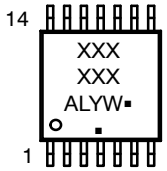

XXX	=	Specific Device Code
A	=	Assembly Location
WL, L	=	Wafer Lot
Y	=	Year
Ww, W	=	Work Week
▪	=	Pb−Free Package

(Note: Microdot may be in either location)

ORDERING INFORMATION

See detailed ordering and shipping information on page 3 of this data sheet.

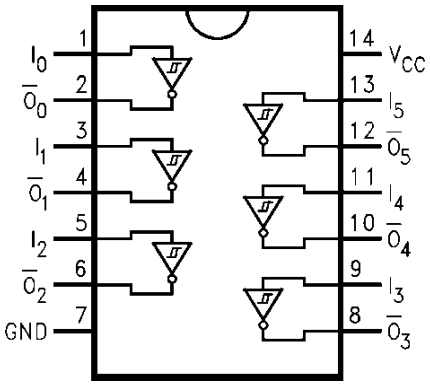

Figure 1. Connection Diagram

PIN DESCRIPTION

Pin Names	Description
I_n	Inputs
$\overline{O}_n$	Outputs

TRUTH TABLE

Input	Output
A	$\overline{\mathbf{O}}$
L	H
H	L

EEE/IEC

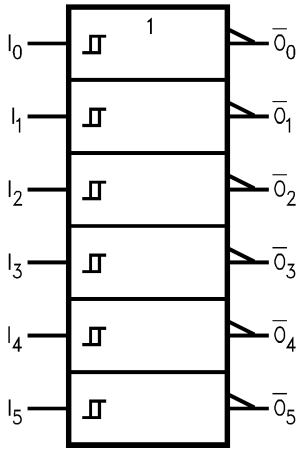

Figure 2. Logic Symbol

© Semiconductor Components Industries, LLC, 1993

ABSOLUTE MAXIMUM RATINGS (The absolute maximum ratings are stress ratings only.)

Symbol	Parameter	Rating
V_{CC}	Supply Voltage	−0.5 V to +6.5 V
I_{IK}	DC Input Diode Current, V_I = −0.5 V	−20mA
V_I	DC Input Voltage	−0.5 V to 6.5 V
I_{OK}	DC Output Diode Current V_O = −0.5 V	−20 mA
	V_O = V_{CC} + 0.5 V	+20 mA
V_O	DC Output Voltage	−0.5 V to V_{CC} + 0.5 V
I_O	DC Output Source or Sink Current	±25 mA
I_{CC} or I_{GND}	DC V_{CC} or Ground Current	±50 mA
T_{STG}	Storage Temperature	−65°C to +150°C
P_D	Power Dissipation	833 mW

Stresses exceeding those listed in the Maximum Ratings table may damage the device. If any of these limits are exceeded, device functionality should not be assumed, damage may occur and reliability may be affected.

RECOMMENDED OPERATING CONDITIONS (Note 1)

Symbol	Parameter	Rating
V_{CC}	Supply Voltage	2.0 V to 3.6 V
V_I	Input Voltage	0 V to 5.5 V
V_O	Output Voltage	0 V to V_{CC}
T_A	Operating Temperature	−40°C to +85°C

Functional operation above the stresses listed in the Recommended Operating Ranges is not implied. Extended exposure to stresses beyond the Recommended Operating Ranges limits may affect device reliability.

1. Unused inputs must be held HIGH or LOW. They may not float.

DC CHARACTERISTICS

Symbol	Parameter	V_{CC}	Conditions	T_A = +25°C			T_A = −40°C to 85°C		Unit
				Min	Typ	Max	Min	Max	
V_{T+}	Positive Threshold	3.0	–	–	–	2.2	–	2.2	V
$V_{T−}$	Negative Threshold	3.0	–	0.9	–	–	0.9	–	V
V_H	Hysteresis	3.0	–	0.3	–	1.2	0.3	1.2	V
V_{OH}	HIGH Level Output Voltage	2.0	V_{IN} = V_{IL} or V_{IH}, I_{OH} = −50 μA	1.9	2.0	–	1.9	–	V
		3.0	V_{IN} = V_{IL} or V_{IH}, I_{OH} = −50 μA	2.9	3.0	–	2.9	–	
			V_{IN} = V_{IL} or V_{IH}, I_{OH} = −4 mA	2.58	–	–	2.48	–	
V_{OL}	LOW Level Output Voltage	2.0	V_{IN} = V_{IL} or V_{IH}, I_{OH} = 50 μA	–	0.0	0.1	–	0.1	V
		3.0	V_{IN} = V_{IL} or V_{IH}, I_{OH} = 50 μA	–	0.0	0.1	–	0.1	
			V_{IN} = V_{IL} or V_{IH}, I_{OH} = 4 mA	–	–	0.36	–	0.44	
I_{IN}	Input Leakage Current	3.6	V_{IN} = 5.5 V or GND	–	–	±0.1	–	±1.0	μA
I_{CC}	Quiescent Supply Current	3.6	V_{IN} = V_{CC} or GND	–	–	2.0	–	0	μA

NOISE CHARACTERISTICS (Note 2)

Symbol	Parameter	V_{CC} (V)	C_L (pF)	T_A = 25°C		Unit
				Typ	Limits	
V_{OLP}	Quiet Output Maximum Dynamic V_{OL}	3.3	50	0.3	0.5	V
V_{OLV}	Quiet Output Minimum Dynamic V_{OL}	3.3	50	–0.3	–0.5	V
V_{IHD}	Minimum HIGH Level Dynamic Input Voltage	3.3	50	–	2.0	V
V_{ILD}	Maximum LOW Level Dynamic Input Voltage	3.3	50	–	0.8	V

2. Input $t_r = t_f$ = 3 ns.

AC ELECTRICAL CHARACTERISTICS

Symbol	Parameter	V_{CC} (V)	C_L (pF)	T_A = +25°C			T_A = –40°C to 85°C		Unit
				Min	Typ	Max	Min	Max	
t_{PLH}, t_{PHL}	Propagation Delay Time	2.7	15 50	– –	8.7 11.2	16.3 19.8	1.0 1.0	19.5 23.0	ns
		3.3 ±0.3	15 50	– –	6.8 9.3	10.6 14.1	1.0 1.0	12.5 16.0	
T_{OSLH}, t_{OSHL}	Output to Output Skew (Note 3)	2.7	50	–	–	1.5	–	1.5	ns
		3.3		–	–	1.5	–	1.5	

3. Parameter guaranteed by design $t_{OSLH} = |t_{PLHm} - t_{PLHn}|$, $t_{OSHL} = |t_{PHLm} - t_{PHLn}|$.

CAPACITANCE

Symbol	Parameter	T_A = +25°C			T_A = –40°C to 85°C		Unit
		Min	Typ	Max	Min	Max	
C_{IN}	Input Capacitance	–	4	10	–	10	pF
C_{PD}	Power Dissipation Capacitance (Note 4)	–	21	–	–	–	pF

4. C_{PD} is defined as the value of the internal equivalent capacitance which is calculated from the operating current consumption without load. Average operating current can be obtained by the equation:

(eq. 1) $$I_{CC(opr.)} = \frac{C_{PD} \times V_{CC} \times f_{IN} \times I_{CC}}{6 \text{ (per Gate)}}$$

ORDERING INFORMATION

Part Number	Package	Marking	Shipping†
74LVX14MTCX	TSSOP–14	LVX 14	2500 Units / Tape & Reel

†For information on tape and reel specifications, including part orientation and tape sizes, please refer to our Tape and Reel Packaging Specifications Brochure, BRD8011/D.

*–Q Suffix for Automotive and Other Applications Requiring Unique Site and Control Change Requirements; AEC–Q100 Qualified and PPAP Capable.

MECHANICAL CASE OUTLINE
PACKAGE DIMENSIONS

TSSOP−14 WB
CASE 948G
ISSUE C

DATE 17 FEB 2016

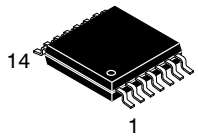

SCALE 2:1

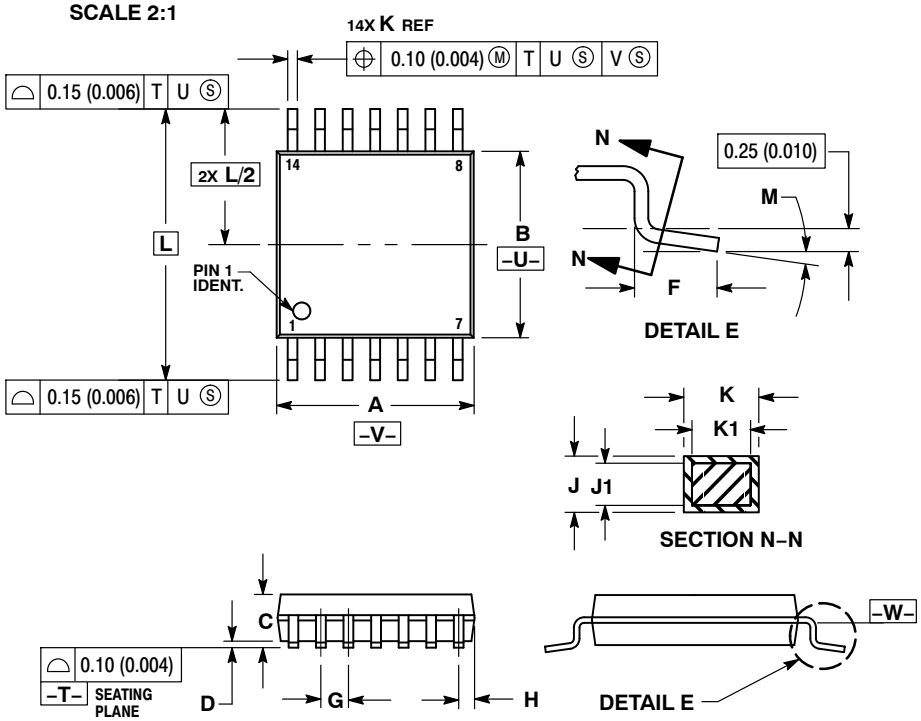

NOTES:
1. DIMENSIONING AND TOLERANCING PER ANSI Y14.5M, 1982.
2. CONTROLLING DIMENSION: MILLIMETER.
3. DIMENSION A DOES NOT INCLUDE MOLD FLASH, PROTRUSIONS OR GATE BURRS. MOLD FLASH OR GATE BURRS SHALL NOT EXCEED 0.15 (0.006) PER SIDE.
4. DIMENSION B DOES NOT INCLUDE INTERLEAD FLASH OR PROTRUSION. INTERLEAD FLASH OR PROTRUSION SHALL NOT EXCEED 0.25 (0.010) PER SIDE.
5. DIMENSION K DOES NOT INCLUDE DAMBAR PROTRUSION. ALLOWABLE DAMBAR PROTRUSION SHALL BE 0.08 (0.003) TOTAL IN EXCESS OF THE K DIMENSION AT MAXIMUM MATERIAL CONDITION.
6. TERMINAL NUMBERS ARE SHOWN FOR REFERENCE ONLY.
7. DIMENSION A AND B ARE TO BE DETERMINED AT DATUM PLANE −W−.

	MILLIMETERS		INCHES	
DIM	MIN	MAX	MIN	MAX
A	4.90	5.10	0.193	0.200
B	4.30	4.50	0.169	0.177
C	−−−	1.20	−−−	0.047
D	0.05	0.15	0.002	0.006
F	0.50	0.75	0.020	0.030
G	0.65 BSC		0.026 BSC	
H	0.50	0.60	0.020	0.024
J	0.09	0.20	0.004	0.008
J1	0.09	0.16	0.004	0.006
K	0.19	0.30	0.007	0.012
K1	0.19	0.25	0.007	0.010
L	6.40 BSC		0.252 BSC	
M	0 °	8 °	0 °	8 °

SOLDERING FOOTPRINT

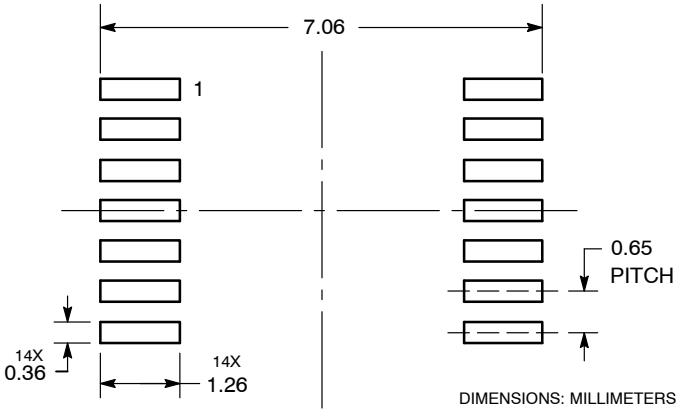

DIMENSIONS: MILLIMETERS

GENERIC MARKING DIAGRAM*

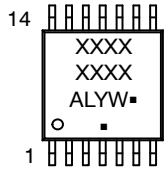

A = Assembly Location
L = Wafer Lot
Y = Year
W = Work Week
▪ = Pb−Free Package

(Note: Microdot may be in either location)

*This information is generic. Please refer to device data sheet for actual part marking. Pb−Free indicator, “G” or microdot “▪”, may or may not be present. Some products may not follow the Generic Marking.

DOCUMENT NUMBER:	**98ASH70246A**	Electronic versions are uncontrolled except when accessed directly from the Document Repository. Printed versions are uncontrolled except when stamped “CONTROLLED COPY” in red.
DESCRIPTION:	**TSSOP−14 WB**	**PAGE 1 OF 1**

onsemi and onsemi are trademarks of Semiconductor Components Industries, LLC dba **onsemi** or its subsidiaries in the United States and/or other countries. **onsemi** reserves the right to make changes without further notice to any products herein. **onsemi** makes no warranty, representation or guarantee regarding the suitability of its products for any particular purpose, nor does **onsemi** assume any liability arising out of the application or use of any product or circuit, and specifically disclaims any and all liability, including without limitation special, consequential or incidental damages. **onsemi** does not convey any license under its patent rights nor the rights of others.

© Semiconductor Components Industries, LLC, 2019

onsemi, , and other names, marks, and brands are registered and/or common law trademarks of Semiconductor Components Industries, LLC dba "**onsemi**" or its affiliates and/or subsidiaries in the United States and/or other countries. **onsemi** owns the rights to a number of patents, trademarks, copyrights, trade secrets, and other intellectual property. A listing of **onsemi**'s product/patent coverage may be accessed at www.onsemi.com/site/pdf/Patent−Marking.pdf. **onsemi** reserves the right to make changes at any time to any products or information herein, without notice. The information herein is provided "as−is" and **onsemi** makes no warranty, representation or guarantee regarding the accuracy of the information, product features, availability, functionality, or suitability of its products for any particular purpose, nor does **onsemi** assume any liability arising out of the application or use of any product or circuit, and specifically disclaims any and all liability, including without limitation special, consequential or incidental damages. Buyer is responsible for its products and applications using **onsemi** products, including compliance with all laws, regulations and safety requirements or standards, regardless of any support or applications information provided by **onsemi**. "Typical" parameters which may be provided in **onsemi** data sheets and/or specifications can and do vary in different applications and actual performance may vary over time. All operating parameters, including "Typicals" must be validated for each customer application by customer's technical experts. **onsemi** does not convey any license under any of its intellectual property rights nor the rights of others. **onsemi** products are not designed, intended, or authorized for use as a critical component in life support systems or any FDA Class 3 medical devices or medical devices with a same or similar classification in a foreign jurisdiction or any devices intended for implantation in the human body. Should Buyer purchase or use **onsemi** products for any such unintended or unauthorized application, Buyer shall indemnify and hold **onsemi** and its officers, employees, subsidiaries, affiliates, and distributors harmless against all claims, costs, damages, and expenses, and reasonable attorney fees arising out of, directly or indirectly, any claim of personal injury or death associated with such unintended or unauthorized use, even if such claim alleges that **onsemi** was negligent regarding the design or manufacture of the part. **onsemi** is an Equal Opportunity/Affirmative Action Employer. This literature is subject to all applicable copyright laws and is not for resale in any manner.

ADDITIONAL INFORMATION

TECHNICAL PUBLICATIONS:
Technical Library: www.onsemi.com/design/resources/technical−documentation
onsemi Website: www.onsemi.com

ONLINE SUPPORT: www.onsemi.com/support
For additional information, please contact your local Sales Representative at www.onsemi.com/support/sales