MC74LVX374

Octal D-Type Flip-Flop with 3-State Outputs

With 5V−Tolerant Inputs

The MC74LVX374 is an advanced high speed CMOS octal D−type flip−flop with 3−state outputs. The inputs tolerate voltages up to 7.0 V, allowing the interface of 5.0 V systems to 3.0 V systems.

This 8−bit D−type flip−flop is controlled by a clock input and an output enable input. When the output enable input is high, the eight outputs are in a high impedance state.

Features

- High Speed: f_{max} = 160 MHz (Typ) at V_{CC} = 3.3 V
- Low Power Dissipation: I_{CC} = 4 μA (Max) at T_A = 25°C
- Power Down Protection Provided on Inputs
- Balanced Propagation Delays
- Low Noise: V_{OLP} = 0.8 V (Max)
- Pin and Function Compatible with Other Standard Logic Families
- Latchup Performance Exceeds 300 mA
- ESD Performance:
  Human Body Model > 2000 V;
  Machine Model > 200 V
- These Devices are Pb−Free and are RoHS Compliant

ON Semiconductor®

http://onsemi.com

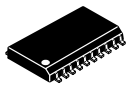

SOIC−20
DW SUFFIX
CASE 751D



TSSOP−20
DT SUFFIX
CASE 948E

PIN ASSIGNMENT

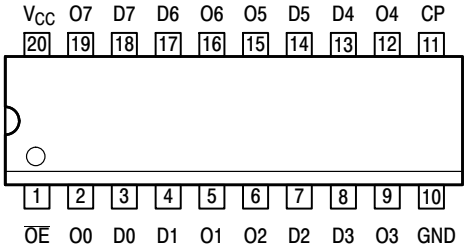

20−Lead (Top View)

MARKING DIAGRAMS

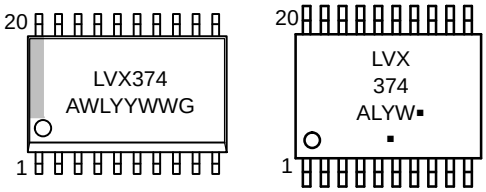

SOIC−20 **TSSOP−20**

LVX374	= Specific Device Code
A	= Assembly Location
WL, L	= Wafer Lot
Y	= Year
WW, W	= Work Week
G or ▪	= Pb−Free Package

(Note: Microdot may be in either location)

PIN NAMES

Pins	Function
$\overline{OE}$	Output Enable Input
CP	Clock Pulse Input
D0−D7	Data Inputs
O0−O7	3−State Outputs

ORDERING INFORMATION

See detailed ordering and shipping information in the package dimensions section on page 5 of this data sheet.

© Semiconductor Components Industries, LLC, 2014

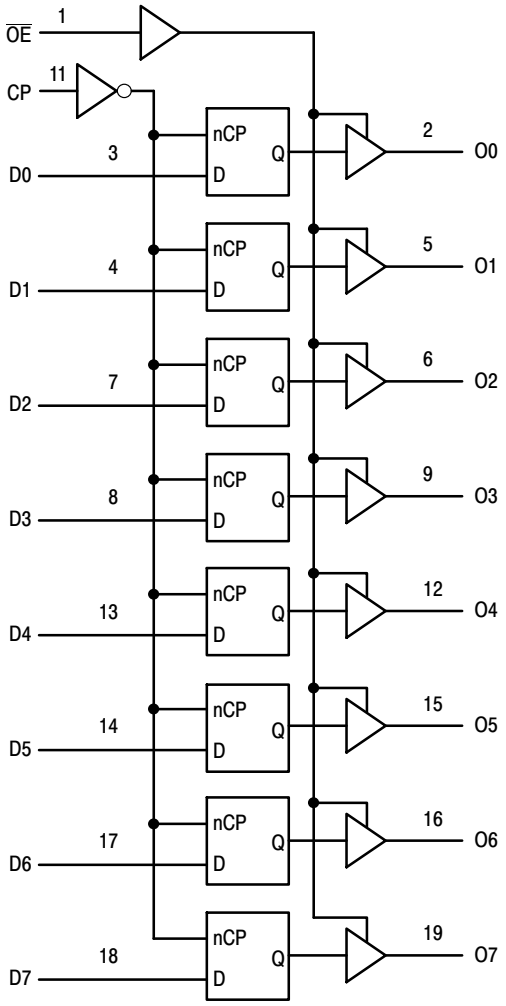

Figure 1. Logic Diagram

INPUTS			OUTPUTS	
$\overline{OE}$	CP	Dn	On	OPERATING MODE
L L	↑ ↑	l h	L H	Load and Read Register
L	↥	X	NC	Hold and Read Register
H	↥	X	Z	Hold and Disable Outputs
H H	↑ ↑	l h	Z Z	Load Internal Register and Disable Outputs

H = High Voltage Level; h = High Voltage Level One Setup Time Prior to the Low−to−High Clock Transition; L = Low Voltage Level; l = Low Voltage Level One Setup Time Prior to the Low−to−High Clock Transition; NC = No Change, State Prior to Low−to−High Clock Transition; X = High or Low Voltage Level and Transitions are Acceptable; Z = High Impedance State; ↑ = Low−to−High Transition; ↥ = Not a Low−to−High Transition; For I_{CC} Reasons DO NOT FLOAT Inputs

MAXIMUM RATINGS

Symbol	Parameter	Value	Unit
V_{CC}	DC Supply Voltage	–0.5 to +7.0	V
V_{in}	DC Input Voltage	–0.5 to +7.0	V
V_{out}	DC Output Voltage	–0.5 to V_{CC} +0.5	V
I_{IK}	Input Diode Current	−20	mA
I_{OK}	Output Diode Current	±20	mA
I_{out}	DC Output Current, per Pin	±25	mA
I_{CC}	DC Supply Current, V_{CC} and GND Pins	±75	mA
P_D	Power Dissipation	180	mW
T_{stg}	Storage Temperature	–65 to +150	°C

Stresses exceeding those listed in the Maximum Ratings table may damage the device. If any of these limits are exceeded, device functionality should not be assumed, damage may occur and reliability may be affected.

RECOMMENDED OPERATING CONDITIONS

Symbol	Parameter	Min	Max	Unit
V_{CC}	DC Supply Voltage	2.0	3.6	V
V_{in}	DC Input Voltage	0	5.5	V
V_{out}	DC Output Voltage	0	V_{CC}	V
T_A	Operating Temperature, All Package Types	−40	+85	°C
$\Delta t/\Delta V$	Input Rise and Fall Time	0	100	ns/V

Functional operation above the stresses listed in the Recommended Operating Ranges is not implied. Extended exposure to stresses beyond the Recommended Operating Ranges limits may affect device reliability.

DC ELECTRICAL CHARACTERISTICS

Symbol	Parameter	Test Conditions	V_{CC} V	T_A = 25°C			T_A = −40 to 85°C		Unit
				Min	Typ	Max	Min	Max	
V_{IH}	High−Level Input Voltage		2.0 3.0 3.6	1.5 2.0 2.4			1.5 2.0 2.4		V
V_{IL}	Low−Level Input Voltage		2.0 3.0 3.6			0.5 0.8 0.8		0.5 0.8 0.8	V
V_{OH}	High−Level Output Voltage (V_{in} = V_{IH} or V_{IL})	I_{OH} = −50 μA I_{OH} = −50 μA I_{OH} = −4 mA	2.0 3.0 3.0	1.9 2.9 2.58	2.0 3.0		1.9 2.9 2.48		V
V_{OL}	Low−Level Output Voltage (V_{in} = V_{IH} or V_{IL})	I_{OL} = 50 μA I_{OL} = 50 μA I_{OL} = 4 mA	2.0 3.0 3.0		0.0 0.0	0.1 0.1 0.36		0.1 0.1 0.44	V
I_{in}	Input Leakage Current	V_{in} = 5.5 V or GND	3.6			±0.1		±1.0	μA
I_{OZ}	Maximum 3−State Leakage Current	V_{in} = V_{IL} or V_{IH} V_{out} = V_{CC} or GND	3.6			±0.25		±2.5	μA
I_{CC}	Quiescent Supply Current	V_{in} = V_{CC} or GND	3.6			4.0		40.0	μA

Product parametric performance is indicated in the Electrical Characteristics for the listed test conditions, unless otherwise noted. Product performance may not be indicated by the Electrical Characteristics if operated under different conditions.

AC ELECTRICAL CHARACTERISTICS (Input $t_r = t_f = 3.0$ns)

Symbol	Parameter	Test Conditions		$T_A = 25°C$ Min	$T_A = 25°C$ Typ	$T_A = 25°C$ Max	$T_A = -40$ to $85°C$ Min	$T_A = -40$ to $85°C$ Max	Unit
f_{max}	Maximum Clock Frequency (50% Duty Cycle)	V_{CC} = 2.7 V	C_L = 15 pF	60	115		50		MHz
			C_L = 50 pF	45	60		40		
		V_{CC} = 3.3 ± 0.3 V	C_L = 15 pF	100	160		85		
			C_L = 50 pF	60	95		55		
t_{PLH}, t_{PHL}	Propagation Delay CP to O	V_{CC} = 2.7 V	C_L = 15 pF		8.5	16.3	1.0	19.5	ns
			C_L = 50 pF		11.0	19.8	1.0	23.0	
		V_{CC} = 3.3 ± 0.3 V	C_L = 15 pF		6.7	10.6	1.0	12.5	
			C_L = 50 pF		9.2	14.1	1.0	16.0	
t_{PZL}, t_{PZH}	Output Enable Time $\overline{OE}$ to O	V_{CC} = 2.7 V, R_L = 1 kΩ	C_L = 15 pF		7.6	14.5	1.0	17.5	ns
			C_L = 50 pF		10.1	18.0	1.0	21.0	
		V_{CC} = 3.3 ± 0.3 V, R_L = 1 kΩ	C_L = 15 pF		5.9	9.3	1.0	11.0	
			C_L = 50 pF		8.4	12.8	1.0	14.5	
t_{PLZ}, t_{PHZ}	Output Disable Time $\overline{OE}$ to O	V_{CC} = 2.7 V, R_L = 1 kΩ	C_L = 50 pF		11.5	18.5	1.0	22.0	ns
		V_{CC} = 3.3 ± 0.3 V, R_L = 1 kΩ	C_L = 50 pF		9.6	13.2	1.0	15.0	
t_{OSHL} t_{OSLH}	Output−to−Output Skew (Note 1)	V_{CC} = 2.7 V	C_L = 50 pF			1.5		1.5	ns
		V_{CC} = 3.3 ± 0.3 V	C_L = 50 pF			1.5		1.5	

1. Skew is defined as the absolute value of the difference between the actual propagation delay for any two separate outputs of the same device. The specification applies to any outputs switching in the same direction, either HIGH−to−LOW (t_{OSHL}) or LOW−to−HIGH (t_{OSLH}); parameter guaranteed by design.

CAPACITIVE CHARACTERISTICS

Symbol	Parameter	$T_A = 25°C$ Min	$T_A = 25°C$ Typ	$T_A = 25°C$ Max	$T_A = -40$ to $85°C$ Min	$T_A = -40$ to $85°C$ Max	Unit
Cin	Input Capacitance		4	10		10	pF
C_{out}	Maximum Three−State Output Capacitance		6				pF
C_{PD}	Power Dissipation Capacitance (Note 2)		32				pF

2. C_{PD} is defined as the value of the internal equivalent capacitance which is calculated from the operating current consumption without load. Average operating current can be obtained by the equation: $I_{CC(OPR)} = C_{PD} \bullet V_{CC} \bullet f_{in} + I_{CC}/8$ (per flip−flop). C_{PD} is used to determine the no−load dynamic power consumption; $P_D = C_{PD} \bullet V_{CC}^2 \bullet f_{in} + I_{CC} \bullet V_{CC}$.

NOISE CHARACTERISTICS (Input $t_r = t_f = 3.0$ns, $C_L = 50$pF, $V_{CC} = 3.3$V, Measured in SOIC Package)

Symbol	Characteristic	$T_A = 25°C$ Typ	$T_A = 25°C$ Max	Unit
V_{OLP}	Quiet Output Maximum Dynamic V_{OL}	0.5	0.8	V
V_{OLV}	Quiet Output Minimum Dynamic V_{OL}	−0.5	−0.8	V
V_{IHD}	Minimum High Level Dynamic Input Voltage		2.0	V
V_{ILD}	Maximum Low Level Dynamic Input Voltage		0.8	V

TIMING REQUIREMENTS (Input $t_r = t_f = 3.0$ns)

Symbol	Parameter	Test Conditions	$T_A = 25°C$ Typ	$T_A = 25°C$ Limit	$T_A = -40$ to $85°C$ Limit	Unit
t_w	Minimum Pulse Width, CP	V_{CC} = 2.7 V		7.5	8.0	ns
		V_{CC} = 3.3 ± 0.3 V		5.0	5.5	
t_{su}	Minimum Setup Time, D to CP	V_{CC} = 2.7 V		6.5	6.5	ns
		V_{CC} = 3.3 ± 0.3 V		4.5	4.5	
t_h	Minimum Hold Time, D to CP	V_{CC} = 2.7 V		2.0	2.0	ns
		V_{CC} = 3.3 ± 0.3 V		2.0	2.0	

SWITCHING WAVEFORMS

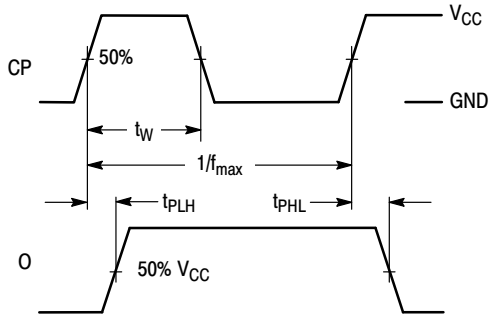

Figure 2.

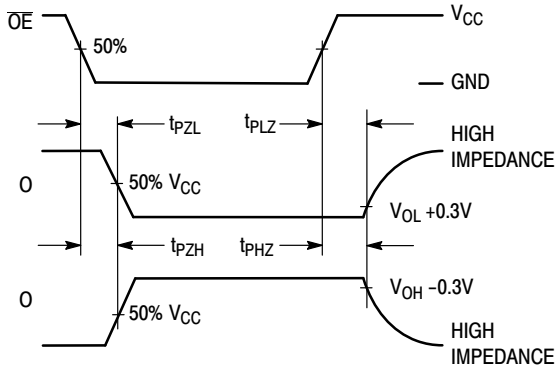

Figure 3.

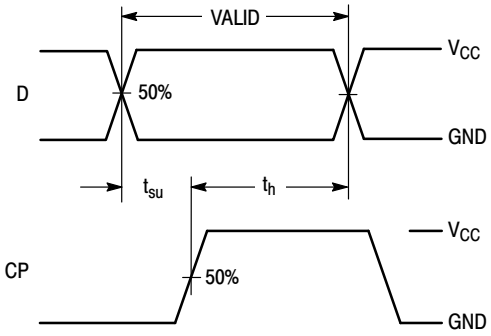

Figure 4.

TEST CIRCUITS

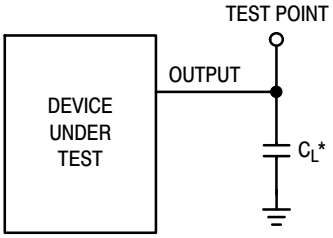

*Includes all probe and jig capacitance

Figure 5. Propagation Delay Test Circuit

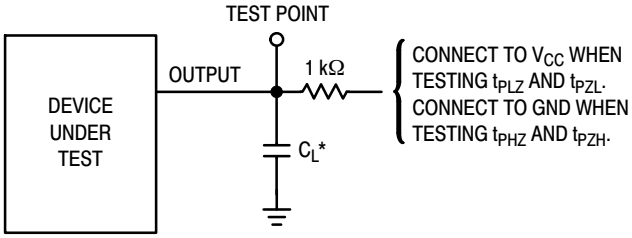

*Includes all probe and jig capacitance

Figure 6. Three−State Test Circuit

ORDERING INFORMATION

Device	Package	Shipping†
MC74LVX374DWR2G	SOIC−20 (Pb−Free)	1000 Tape & Reel
MC74LVX374DTR2G	TSSOP−20 (Pb−Free)	2500 Tape & Reel

†For information on tape and reel specifications, including part orientation and tape sizes, please refer to our Tape and Reel Packaging Specifications Brochure, BRD8011/D.

MECHANICAL CASE OUTLINE
PACKAGE DIMENSIONS

SOIC−20 WB
CASE 751D−05
ISSUE H

DATE 22 APR 2015

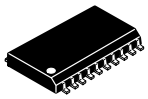

SCALE 1:1

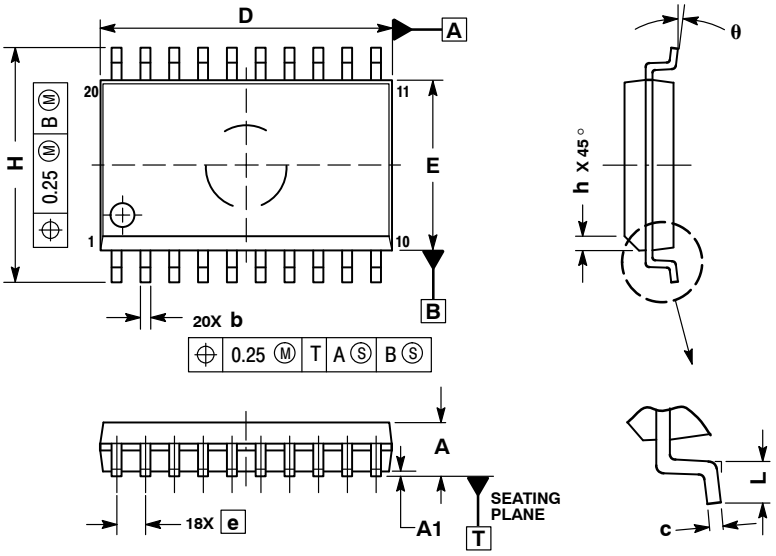

NOTES:
1. DIMENSIONS ARE IN MILLIMETERS.
2. INTERPRET DIMENSIONS AND TOLERANCES PER ASME Y14.5M, 1994.
3. DIMENSIONS D AND E DO NOT INCLUDE MOLD PROTRUSION.
4. MAXIMUM MOLD PROTRUSION 0.15 PER SIDE.
5. DIMENSION B DOES NOT INCLUDE DAMBAR PROTRUSION. ALLOWABLE PROTRUSION SHALL BE 0.13 TOTAL IN EXCESS OF B DIMENSION AT MAXIMUM MATERIAL CONDITION.

	MILLIMETERS	
DIM	MIN	MAX
A	2.35	2.65
A1	0.10	0.25
b	0.35	0.49
c	0.23	0.32
D	12.65	12.95
E	7.40	7.60
e	1.27 BSC	
H	10.05	10.55
h	0.25	0.75
L	0.50	0.90
θ	0°	7°

RECOMMENDED SOLDERING FOOTPRINT*

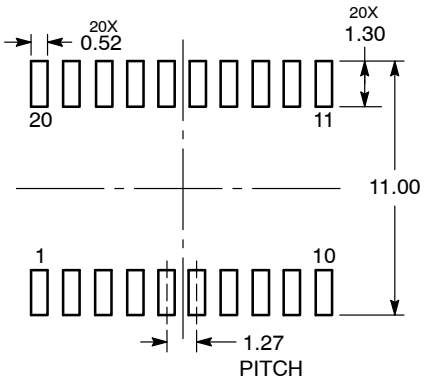

DIMENSIONS: MILLIMETERS

*For additional information on our Pb−Free strategy and soldering details, please download the ON Semiconductor Soldering and Mounting Techniques Reference Manual, SOLDERRM/D.

GENERIC MARKING DIAGRAM*

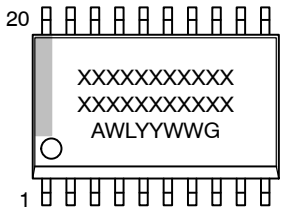

XXXXX = Specific Device Code
A = Assembly Location
WL = Wafer Lot
YY = Year
WW = Work Week
G = Pb−Free Package

*This information is generic. Please refer to device data sheet for actual part marking. Pb−Free indicator, “G” or microdot “▪”, may or may not be present. Some products may not follow the Generic Marking.

DOCUMENT NUMBER:	**98ASB42343B**	Electronic versions are uncontrolled except when accessed directly from the Document Repository. Printed versions are uncontrolled except when stamped “CONTROLLED COPY” in red.
DESCRIPTION:	**SOIC−20 WB**	**PAGE 1 OF 1**

onsemi and ONSEMI. are trademarks of Semiconductor Components Industries, LLC dba **onsemi** or its subsidiaries in the United States and/or other countries. **onsemi** reserves the right to make changes without further notice to any products herein. **onsemi** makes no warranty, representation or guarantee regarding the suitability of its products for any particular purpose, nor does **onsemi** assume any liability arising out of the application or use of any product or circuit, and specifically disclaims any and all liability, including without limitation special, consequential or incidental damages. **onsemi** does not convey any license under its patent rights nor the rights of others.

© Semiconductor Components Industries, LLC, 2019

MECHANICAL CASE OUTLINE
PACKAGE DIMENSIONS

ON Semiconductor®

TSSOP−20 WB
CASE 948E
ISSUE D

DATE 17 FEB 2016

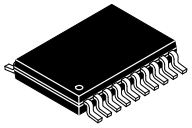

SCALE 2:1

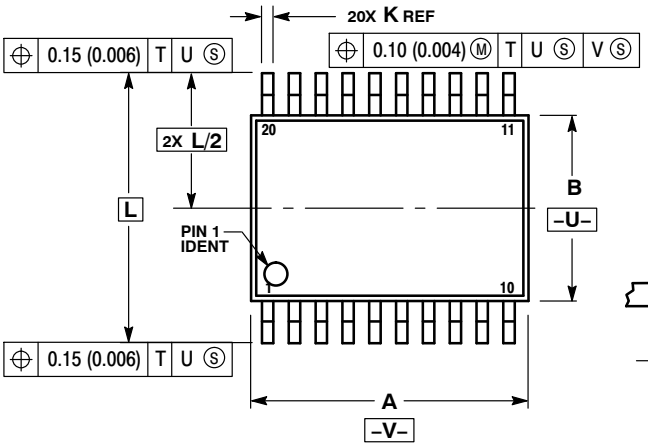

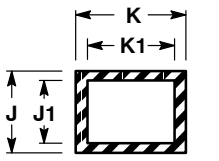

SECTION N−N

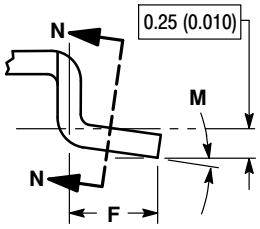

DETAIL E

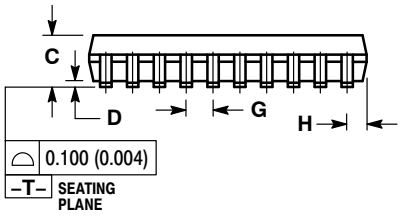

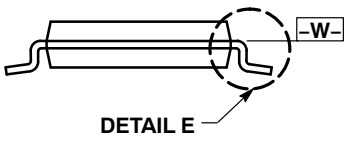

NOTES:
1. DIMENSIONING AND TOLERANCING PER ANSI Y14.5M, 1982.
2. CONTROLLING DIMENSION: MILLIMETER.
3. DIMENSION A DOES NOT INCLUDE MOLD FLASH, PROTRUSIONS OR GATE BURRS. MOLD FLASH OR GATE BURRS SHALL NOT EXCEED 0.15 (0.006) PER SIDE.
4. DIMENSION B DOES NOT INCLUDE INTERLEAD FLASH OR PROTRUSION. INTERLEAD FLASH OR PROTRUSION SHALL NOT EXCEED 0.25 (0.010) PER SIDE.
5. DIMENSION K DOES NOT INCLUDE DAMBAR PROTRUSION. ALLOWABLE DAMBAR PROTRUSION SHALL BE 0.08 (0.003) TOTAL IN EXCESS OF THE K DIMENSION AT MAXIMUM MATERIAL CONDITION.
6. TERMINAL NUMBERS ARE SHOWN FOR REFERENCE ONLY.
7. DIMENSION A AND B ARE TO BE DETERMINED AT DATUM PLANE −W−.

	MILLIMETERS		INCHES	
DIM	MIN	MAX	MIN	MAX
A	6.40	6.60	0.252	0.260
B	4.30	4.50	0.169	0.177
C	---	1.20	---	0.047
D	0.05	0.15	0.002	0.006
F	0.50	0.75	0.020	0.030
G	0.65 BSC		0.026 BSC	
H	0.27	0.37	0.011	0.015
J	0.09	0.20	0.004	0.008
J1	0.09	0.16	0.004	0.006
K	0.19	0.30	0.007	0.012
K1	0.19	0.25	0.007	0.010
L	6.40 BSC		0.252 BSC	
M	0°	8°	0°	8°

SOLDERING FOOTPRINT

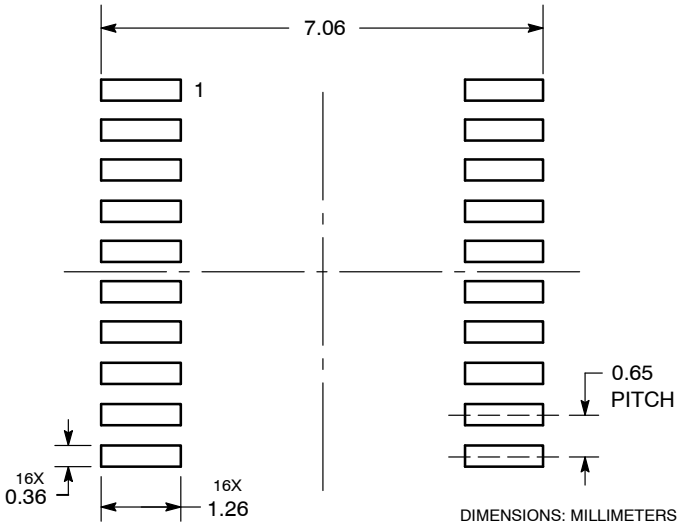

DIMENSIONS: MILLIMETERS

GENERIC MARKING DIAGRAM*

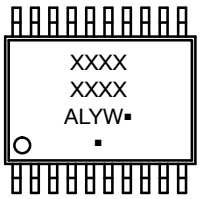

A = Assembly Location
L = Wafer Lot
Y = Year
W = Work Week
▪ = Pb−Free Package

(Note: Microdot may be in either location)

*This information is generic. Please refer to device data sheet for actual part marking. Pb−Free indicator, “G” or microdot “ ▪”, may or may not be present.

DOCUMENT NUMBER:	98ASH70169A	Electronic versions are uncontrolled except when accessed directly from the Document Repository. Printed versions are uncontrolled except when stamped “CONTROLLED COPY” in red.
DESCRIPTION:	TSSOP−20 WB	PAGE 1 OF 1

ON Semiconductor and ON are trademarks of Semiconductor Components Industries, LLC dba ON Semiconductor or its subsidiaries in the United States and/or other countries. ON Semiconductor reserves the right to make changes without further notice to any products herein. ON Semiconductor makes no warranty, representation or guarantee regarding the suitability of its products for any particular purpose, nor does ON Semiconductor assume any liability arising out of the application or use of any product or circuit, and specifically disclaims any and all liability, including without limitation special, consequential or incidental damages. ON Semiconductor does not convey any license under its patent rights nor the rights of others.

© Semiconductor Components Industries, LLC, 2019

onsemi, , and other names, marks, and brands are registered and/or common law trademarks of Semiconductor Components Industries, LLC dba "**onsemi**" or its affiliates and/or subsidiaries in the United States and/or other countries. **onsemi** owns the rights to a number of patents, trademarks, copyrights, trade secrets, and other intellectual property. A listing of **onsemi**'s product/patent coverage may be accessed at www.onsemi.com/site/pdf/Patent−Marking.pdf. **onsemi** reserves the right to make changes at any time to any products or information herein, without notice. The information herein is provided "as−is" and **onsemi** makes no warranty, representation or guarantee regarding the accuracy of the information, product features, availability, functionality, or suitability of its products for any particular purpose, nor does **onsemi** assume any liability arising out of the application or use of any product or circuit, and specifically disclaims any and all liability, including without limitation special, consequential or incidental damages. Buyer is responsible for its products and applications using **onsemi** products, including compliance with all laws, regulations and safety requirements or standards, regardless of any support or applications information provided by **onsemi**. "Typical" parameters which may be provided in **onsemi** data sheets and/or specifications can and do vary in different applications and actual performance may vary over time. All operating parameters, including "Typicals" must be validated for each customer application by customer's technical experts. **onsemi** does not convey any license under any of its intellectual property rights nor the rights of others. **onsemi** products are not designed, intended, or authorized for use as a critical component in life support systems or any FDA Class 3 medical devices or medical devices with a same or similar classification in a foreign jurisdiction or any devices intended for implantation in the human body. Should Buyer purchase or use **onsemi** products for any such unintended or unauthorized application, Buyer shall indemnify and hold **onsemi** and its officers, employees, subsidiaries, affiliates, and distributors harmless against all claims, costs, damages, and expenses, and reasonable attorney fees arising out of, directly or indirectly, any claim of personal injury or death associated with such unintended or unauthorized use, even if such claim alleges that **onsemi** was negligent regarding the design or manufacture of the part. **onsemi** is an Equal Opportunity/Affirmative Action Employer. This literature is subject to all applicable copyright laws and is not for resale in any manner.

ADDITIONAL INFORMATION

TECHNICAL PUBLICATIONS:
Technical Library: www.onsemi.com/design/resources/technical−documentation
onsemi Website: www.onsemi.com

ONLINE SUPPORT: www.onsemi.com/support
For additional information, please contact your local Sales Representative at www.onsemi.com/support/sales