# CAT811

# 4-Pin Microprocessor Power Supply Supervisor with Manual Reset

DISCONTINUED
THIS DEVICE IS NOT RECOMMENDED FOR NEW DESIGN
PLEASE CONTACT YOUR onsemi REPRESENTATIVE FOR INFORMATION

## Description

The CAT811 is a microprocessor supervisory circuit that monitors power supplies. The CAT811 is a direct replacement for the MAX811 in applications operating over the industrial temperature range and has a manual reset input.

These devices generate a reset signal, which is asserted while the power supply voltage is below a preset threshold level and for at least 140 ms after the power supply level has risen above that level. The underlying floating gate technology, Analog EEPROM used by ON Semiconductor, makes it possible to offer any custom reset threshold value. Seven industry standard threshold levels are offered to support +5.0 V, +3.3 V, +3.0 V and +2.5 V systems. The CAT811 features a RESET push−pull output (active LOW).

Fast transients on the power supply are ignored and the output is guaranteed to be in the correct state at Vcc levels as low as 1.0 V.

The CAT811 is fully specified over the industrial temperature range (−40°C to 85°C) and is available in a compact 4−pin SOT−143 package.

## Features

- Precision Monitoring of +5.0 V (± 5%, ± 10%, ± 20%), +3.3 V (± 5%, ± 10%)
- Manual Reset Input
- Output Configuration: Active LOW Reset
- Direct Replacements for the MAX811 in Applications Operating over the Industrial Temperature Range
- Reset Valid down to $V_{CC}$ = 1.0 V
- 6 μA Power Supply Current
- Power Supply Transient Immunity
- Available in SOT−143 Packages with Sn or NiPdAu Green Lead Finishes
- Industrial Temperature Range: −40°C to +85°C
- These Devices are Pb−Free, Halogen Free/BFR Free and are RoHS Compliant

## Applications

- Computers, Servers, Laptops and Cable Modems
- Wireless Communications
- Embedded Control Systems
- White Goods, Power Meters
- Intelligent Instruments
- PDAs and Handheld Equipment

**ON Semiconductor®**

www.onsemi.com

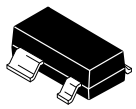

**SOT−143**
**BI SUFFIX**
**CASE 527AF**

### PIN CONFIGURATION

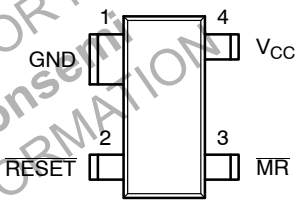


(Top View)

### MARKING DIAGRAM

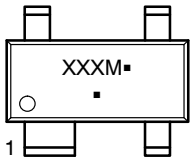


XXX = Specific Device Code
M = Month Code
▪ = Pb−Free Package

(Note: Microdot may be in either location)

### ORDERING INFORMATION

See detailed ordering and shipping information in the package dimensions section on page 8 of this data sheet.

© Semiconductor Components Industries, LLC, 2015

**Table 1. THRESHOLD SUFFIX SELECTOR DESCRIPTION**

| Nominal Threshold Voltage | Threshold Suffix Designation |
|---|---|
| 4.63 V | L |
| 3.08 V | T |
| 2.93 V | S |

**Table 2. PIN DESCRIPTION**

| Pin Number | Pin Name | Description |
|---|---|---|
| 1 | GND | Ground. |
| 2 | $\overline{\text{RESET}}$ | Active LOW reset. $\overline{\text{RESET}}$ is asserted if $V_{CC}$ falls below the reset threshold and remains low for at least 140 ms after $V_{CC}$ rises above the reset threshold. |
| 3 | $\overline{\text{MR}}$ | Manual Reset Input. A logic LOW on $\overline{\text{MR}}$ asserts RESET. RESET remains active as long as $\overline{\text{MR}}$ is LOW and for 140 ms after $\overline{\text{MR}}$ returns HIGH. The active low input has an internal 20 kΩ pull−up resistor. The input should be left open if not used. |
| 4 | $V_{CC}$ | Power supply voltage that is monitored. |

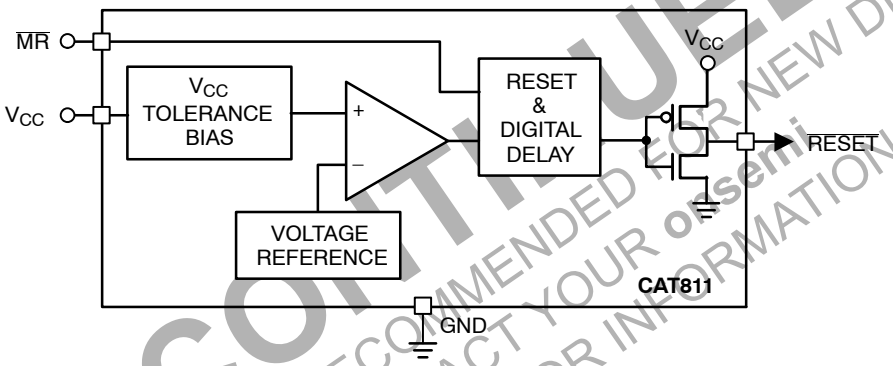


**Figure 1. Block Diagrams**

DISCONTINUED
THIS DEVICE IS NOT RECOMMENDED FOR NEW DESIGN
PLEASE CONTACT YOUR onsemi
REPRESENTATIVE FOR INFORMATION

**Table 3. ABSOLUTE MAXIMUM RATINGS**

| Parameters | Ratings | Units |
|---|---|---|
| Any pin with respect to ground | −0.3 to +6.0 | V |
| Input Current, $V_{CC}$ | 20 | mA |
| Output Current $\overline{RESET}$ | 20 | mA |
| Rate of Raise, $V_{CC}$ | 100 | V/μs |
| Continuous Power Dissipations<br>Derate 4 mW/°C above +70°C (SOT−143) | 320 | mW |
| Storage Temperature Range | −65 to +105 | °C |
| Operating Ambient Temperature Range | −40 to +85 | °C |
| Lead Soldering Temperature (10 seconds) | +300 | °C |

Stresses exceeding those listed in the Maximum Ratings table may damage the device. If any of these limits are exceeded, device functionality should not be assumed, damage may occur and reliability may be affected.

**Table 4. ELECTRICAL OPERATING CHARACTERISTICS**
($V_{CC}$ = Full range, $T_A$ = −40°C to +85°C unless otherwise noted. Typical values at $T_A$ = +25°C and $V_{CC}$ = 5 V for the L version, $V_{CC}$ = 3.3 V for the T/S versions.)

| Parameter | Symbol | Conditions | | Min | Typ | Max | Units |
|---|---|---|---|---|---|---|---|
| $V_{CC}$ Range | | $T_A$ = 0°C to +70°C | | 1.0 | | 5.5 | V |
| | | $T_A$ = −40°C to +85°C | | 1.2 | | 5.5 | |
| Supply Current | $I_{CC}$ | $T_A$ = −40°C to +85°C | $V_{CC}$ < 5.5 V, L | | 8 | 20 | μA |
| | | | $V_{CC}$ < 3.6 V, S/T | | 6 | 15 | |
| Reset Threshold Voltage | $V_{TH}$ | L Threshold | $T_A$ = +25°C | 4.56 | 4.63 | 4.70 | V |
| | | | $T_A$ = −40°C to +85°C | 4.50 | | 4.75 | |
| | | T Threshold | $T_A$ = +25°C | 3.04 | 3.08 | 3.11 | |
| | | | $T_A$ = −40°C to +85°C | 3.00 | | 3.15 | |
| | | S Threshold | $T_A$ = +25°C | 2.89 | 2.93 | 2.96 | |
| | | | $T_A$ = −40°C to +85°C | 2.85 | | 3.00 | |
| Reset Threshold Tempco | | | | | 30 | | ppm/°C |
| $V_{CC}$ to Reset Delay (Note 3) | | $V_{CC}$ = $V_{TH}$ to ($V_{TH}$ − 100 mV) | | | 20 | | μs |
| Reset Active Timeout Period | | $T_A$ = −40°C to +85°C | | 140 | 240 | 400 | ms |

1. Production testing done at $T_A$ = +25°C; limits over temperature guaranteed by design only.
2. Glitches of 100 ns or less typically will not generate a reset pulse.
3. $\overline{RESET}$ output for the CAT811.

DISCONTINUED
THIS DEVICE IS NOT RECOMMENDED FOR NEW DESIGN
PLEASE CONTACT YOUR onsemi REPRESENTATIVE FOR INFORMATION

**Table 4. ELECTRICAL OPERATING CHARACTERISTICS**
($V_{CC}$ = Full range, $T_A$ = −40°C to +85°C unless otherwise noted. Typical values at $T_A$ = +25°C and $V_{CC}$ = 5 V for the L version, $V_{CC}$ = 3.3 V for the T/S versions.)

| Parameter | Symbol | Conditions | Min | Typ | Max | Units |
|---|---|---|---|---|---|---|
| $\overline{\text{RESET}}$ Output Voltage Low (Push−pull, active LOW, CAT811) | $V_{OL}$ | $V_{CC} = V_{TH\ min}$, $I_{SINK}$ = 1.2 mA CAT811S/T | | | 0.3 | V |
| | | $V_{CC} = V_{TH\ min}$, $I_{SINK}$ = 3.2 mA CAT811L | | | 0.4 | |
| | | $V_{CC}$ > 1.0 V, $I_{SINK}$ = 50 μA | | | 0.3 | |
| $\overline{\text{RESET}}$ Output Voltage High (Push−pull, active LOW, CAT811) | $V_{OH}$ | $V_{CC} = V_{TH\ max}$, $I_{SOURCE}$ = 500 μA CAT811S/T | $0.8V_{CC}$ | | | V |
| | | $V_{CC} = V_{TH\ max}$, $I_{SOURCE}$ = 800 μA CAT811L | $V_{CC}$ − 1.5 | | | V |
| $\overline{\text{MR}}$ Minimum Pulse Width | $t_{MR}$ | | 10 | | | μs |
| $\overline{\text{MR}}$ Glitch Immunity | | (Note 2) | | 100 | | ns |
| $\overline{\text{MR}}$ to RESET Propagation Delay | $t_{MD}$ | (Note 3) | | 0.5 | | μs |
| $\overline{\text{MR}}$ Input Threshold | $V_{IH}$ | $V_{CC} > V_{TH\ (MAX)}$, CAT811L | 2.3V | | | V |
| | $V_{IL}$ | | | | 0.8 | |
| | $V_{IH}$ | $V_{CC} > V_{IH\ (MAX)}$, CAT811S/T | $0.7V_{CC}$ | | | |
| | $V_{IL}$ | | | | $0.25V_{CC}$ | |
| $\overline{\text{MR}}$ Pull−up Resistance | | | 10 | 20 | 75 | kΩ |

1. Production testing done at $T_A$ = +25°C; limits over temperature guaranteed by design only.
2. Glitches of 100 ns or less typically will not generate a reset pulse.
3. $\overline{\text{RESET}}$ output for the CAT811.

DISCONTINUED
THIS DEVICE IS NOT RECOMMENDED FOR NEW DESIGN
PLEASE CONTACT YOUR onsemi
REPRESENTATIVE FOR INFORMATION

## TYPICAL OPERATING CHARACTERISTICS

($V_{CC}$ = Full range, $T_A$ = −40°C to +85°C unless otherwise noted. Typical values at $T_A$ = +25°C and $V_{CC}$ = 5 V for the L version, $V_{CC}$ = 3.3 V for the T/S versions.)

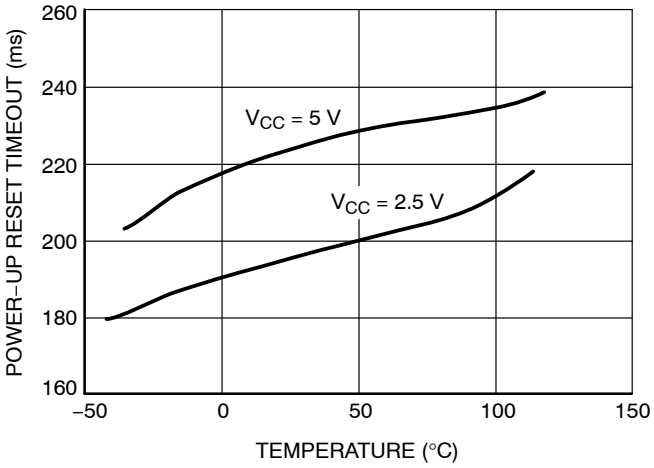


**Figure 2. Power−Up Reset Timeout vs. Temperature**

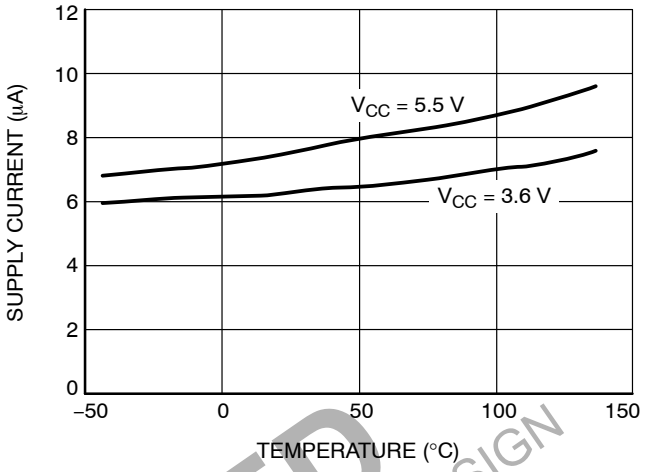


**Figure 3. Supply Current vs. Temperature (No Load, CAT811S/T)**

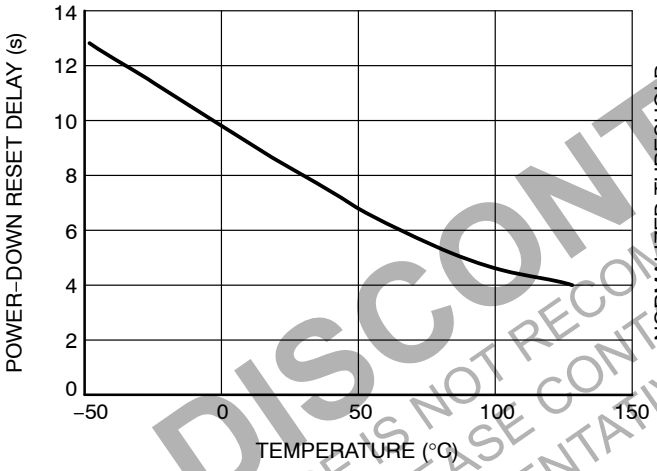


**Figure 4. Power−Down Reset Delay vs. Temperature (CAT811S/T)**

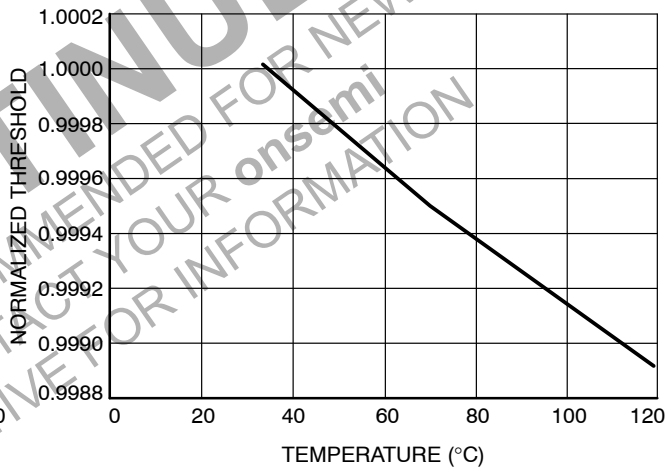


**Figure 5. Normalized Reset Threshold vs. Temperature**

DISCONTINUED
THIS DEVICE IS NOT RECOMMENDED FOR NEW DESIGN
PLEASE CONTACT YOUR onsemi
REPRESENTATIVE FOR INFORMATION

## DETAILED DESCRIPTION

### Reset Timing

The reset signal is asserted LOW for the CAT811 when the power supply voltage falls below the threshold trip voltage and remains asserted for at least 140 ms after the power supply voltage has risen above the threshold.

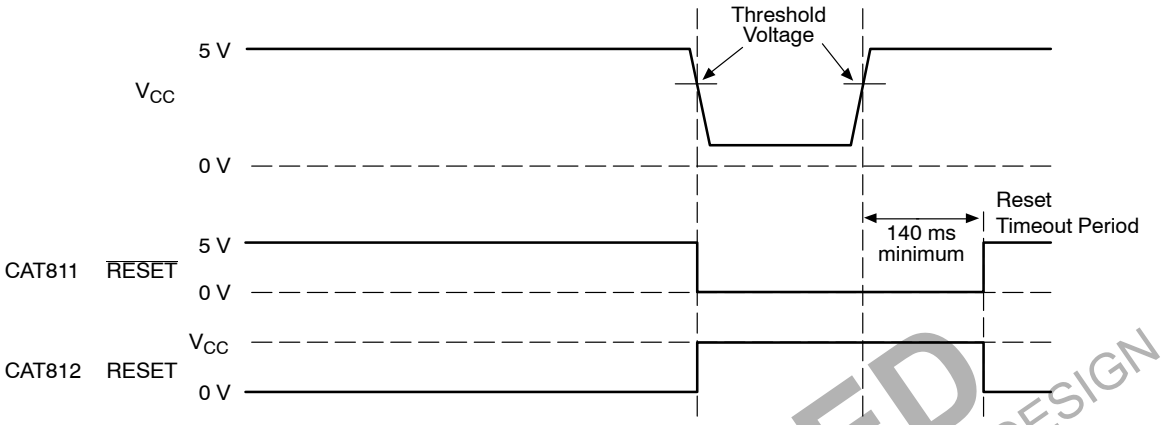


**Figure 6. Reset Timing Diagram**

### $V_{CC}$ Transient Response

The CAT811 protect µPs against brownout failure. Short duration transients of 4 µs or less and 100 mV amplitude typically do not cause a false RESET.

Figure 7 shows the maximum pulse duration of negative−going $V_{CC}$ transients that do not cause a reset condition. As the amplitude of the transient goes further below the threshold (increasing $V_{TH} - V_{CC}$), the maximum pulse duration decreases. In this test, the $V_{CC}$ starts from an initial voltage of 0.5 V above the threshold and drops below it by the amplitude of the overdrive voltage ($V_{TH} - V_{CC}$).

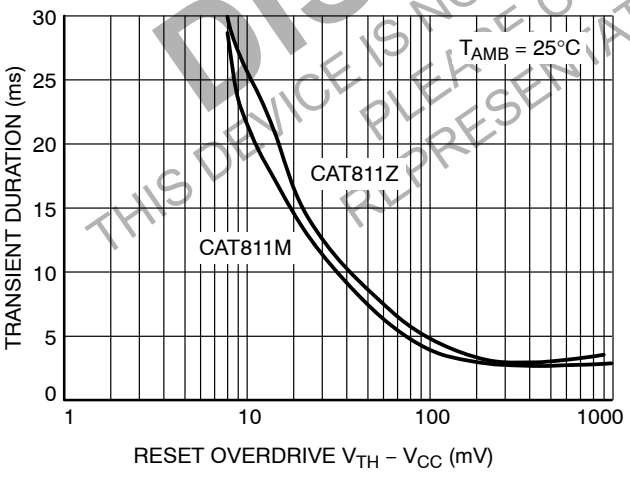


**Figure 7. Maximum Transient Duration without Causing a Reset Pulse vs. Reset Comparator Overdrive**

### Valid Reset with $V_{CC}$ under 1.0 V

To ensure that the CAT811 $\overline{\text{RESET}}$ pin is in a known state when $V_{CC}$ is under 1.0 V, a 100 kΩ pull−down resistor between $\overline{\text{RESET}}$ pin and GND is recommended; the value is not critical.

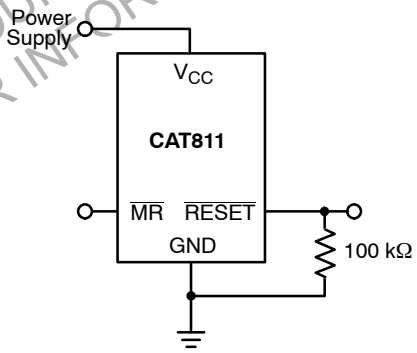


**Figure 8. $\overline{\text{RESET}}$ Valid with $V_{CC}$ Under 1.0 V**

DISCONTINUED
THIS DEVICE IS NOT RECOMMENDED FOR NEW DESIGN
PLEASE CONTACT YOUR onsemi
REPRESENTATIVE FOR INFORMATION

### Bi−directional Reset Pin Interfacing

The CAT811 can interface with μP/μC bi−directional reset pins by connecting a 4.7 kΩ resistor in series with the CAT811 reset output and the μP/μC bi−directional reset pin.

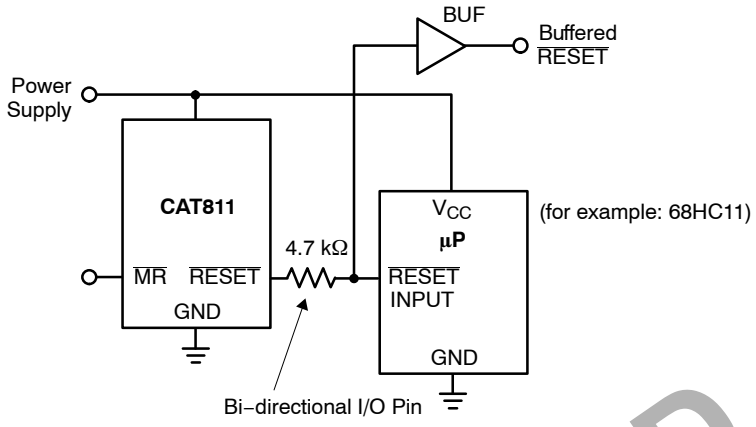


**Figure 9. Bi−directional Reset Pin Interfacing**

**Table 5. OTHER SUPERVISORY PRODUCTS**

| Function | CAT1161/3 | CAT1162 | CAT809 | CAT810 | CAT811 |
|---|---|---|---|---|---|
| With 16k Bit Serial EEPROM Memory | ✔ | ✔ | | | |
| Watchdog Timer | ✔ | | | | |
| Manual Reset Input | ✔ | ✔ | | | ✔ |
| Active Low Reset | | | ✔ | | ✔ |
| Active High Reset | | | | ✔ | |
| Dual Polarity Reset Outputs | ✔ | ✔ | | | |
| Package | 8−pin DIP and SOIC | 8−pin DIP and SOIC | 3−pin SOT−23 and SC70 | 3−pin SOT−23 and SC70 | 4−pin SOT−143 |

DISCONTINUED
THIS DEVICE IS NOT RECOMMENDED FOR NEW DESIGN
PLEASE CONTACT YOUR onsemi
REPRESENTATIVE FOR INFORMATION

## ORDERING INFORMATION

| Order Number | | Top Mark (Note 4) | | | | Quantity per Reel (Note 5) |
|---|---|---|---|---|---|---|
| NiPdAu | Voltage | NiPdAu | Output | Reset | Package | |
| CAT811LTBI−GT3 | 4.63 V | VEA | Manual Reset | LOW | SOT−143−4 | 3,000 |
| CAT811MTBI−GT3 | 4.38 V | VEA | | | | |
| CAT811JTBI−GT3 | 4.00 V | VEA | | | | |
| CAT811TTBI−GT3 | 3.08 V | VEA | | | | |
| CAT811STBI−GT3 | 2.93 V | VEA | | | | |
| CAT811RTBI−GT3 | 2.63 V | VEA | | | | |
| CAT811ZTBI−GT3 | 2.32 V | VEA | | | | |

4. Threshold and full part numbers will be provided on box and reel labels as well as all Shipping documents.
5. For information on tape and reel specifications, including part orientation and tape sizes, please refer to our Tape and Reel Packaging Specifications Brochure, BRD8011/D.
6. For detailed information and a breakdown of device nomenclature and numbering systems, please see the ON Semiconductor Device Nomenclature document, TND310/D, available at www.onsemi.com

DISCONTINUED
THIS DEVICE IS NOT RECOMMENDED FOR NEW DESIGN
PLEASE CONTACT YOUR onsemi
REPRESENTATIVE FOR INFORMATION

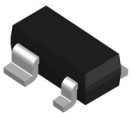

**SOT−143, 4 LEAD, 2.90x1.30x0.90, 1.92P**
CASE 527AF
ISSUE B

DATE 26 FEB 2024

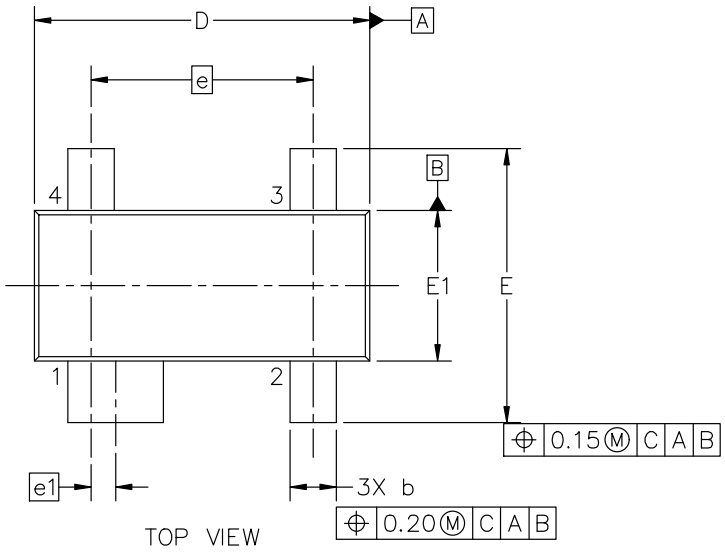


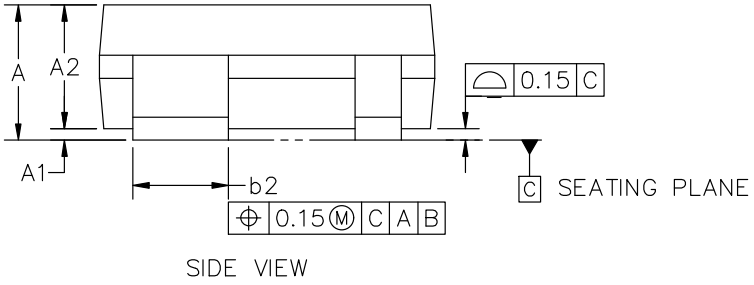


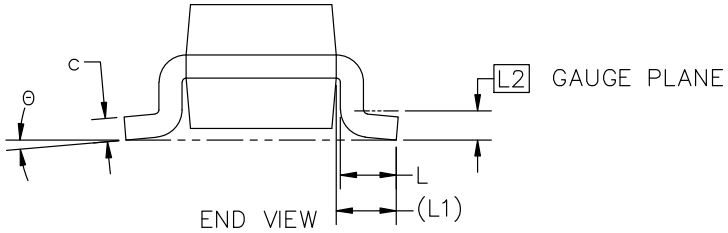


NOTES:

1. DIMENSION AND TOLERANCING PER ASME Y14.5M, 2018
2. CONTROLLING DIMENSION: MILLIMETERS

| SYMBOL | MIN | NOM | MAX |
|---|---|---|---|
| A | 0.80 | 1.01 | 1.22 |
| A1 | 0.05 | 0.10 | 0.15 |
| A2 | 0.75 | 0.90 | 1.07 |
| b | 0.30 | 0.40 | 0.50 |
| b2 | 0.76 | 0.83 | 0.89 |
| c | 0.08 | 0.14 | 0.20 |
| D | 2.80 | 2.90 | 3.04 |
| E | 2.10 | 2.37 | 2.64 |
| E1 | 1.20 | 1.30 | 1.40 |
| e | 1.92 BSC | | |
| e1 | 0.20 BSC | | |
| L | 0.40 | 0.50 | 0.60 |
| L1 | 0.54 REF | | |
| L2 | 0.25 BSC | | |
| Θ | 0° | – | 8° |

**GENERIC**
**MARKING DIAGRAM***

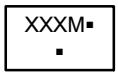


XXX = Specific Device Code
M = Month Code
▪ = Pb−Free Package

(Note: Microdot may be in either location)

*This information is generic. Please refer to device data sheet for actual part marking. Pb−Free indicator, “G” or microdot “▪”, may or may not be present. Some products may not follow the Generic Marking.

| | | |
|---|---|---|
| **DOCUMENT NUMBER:** | **98AON34306E** | Electronic versions are uncontrolled except when accessed directly from the Document Repository. Printed versions are uncontrolled except when stamped “CONTROLLED COPY” in red. |
| **DESCRIPTION:** | **SOT−143, 4 LEAD, 2.90x1.30x0.90, 1.92P** | **PAGE 1 OF 1** |

**onsemi** and onsemi are trademarks of Semiconductor Components Industries, LLC dba **onsemi** or its subsidiaries in the United States and/or other countries. **onsemi** reserves the right to make changes without further notice to any products herein. **onsemi** makes no warranty, representation or guarantee regarding the suitability of its products for any particular purpose, nor does **onsemi** assume any liability arising out of the application or use of any product or circuit, and specifically disclaims any and all liability, including without limitation special, consequential or incidental damages. **onsemi** does not convey any license under its patent rights nor the rights of others.

© Semiconductor Components Industries, LLC, 2019

**onsemi**, , and other names, marks, and brands are registered and/or common law trademarks of Semiconductor Components Industries, LLC dba "**onsemi**" or its affiliates and/or subsidiaries in the United States and/or other countries. **onsemi** owns the rights to a number of patents, trademarks, copyrights, trade secrets, and other intellectual property. A listing of **onsemi**'s product/patent coverage may be accessed at www.onsemi.com/site/pdf/Patent−Marking.pdf. **onsemi** reserves the right to make changes at any time to any products or information herein, without notice. The information herein is provided "as−is" and **onsemi** makes no warranty, representation or guarantee regarding the accuracy of the information, product features, availability, functionality, or suitability of its products for any particular purpose, nor does **onsemi** assume any liability arising out of the application or use of any product or circuit, and specifically disclaims any and all liability, including without limitation special, consequential or incidental damages. Buyer is responsible for its products and applications using **onsemi** products, including compliance with all laws, regulations and safety requirements or standards, regardless of any support or applications information provided by **onsemi**. "Typical" parameters which may be provided in **onsemi** data sheets and/or specifications can and do vary in different applications and actual performance may vary over time. All operating parameters, including "Typicals" must be validated for each customer application by customer's technical experts. **onsemi** does not convey any license under any of its intellectual property rights nor the rights of others. **onsemi** products are not designed, intended, or authorized for use as a critical component in life support systems or any FDA Class 3 medical devices or medical devices with a same or similar classification in a foreign jurisdiction or any devices intended for implantation in the human body. Should Buyer purchase or use **onsemi** products for any such unintended or unauthorized application, Buyer shall indemnify and hold **onsemi** and its officers, employees, subsidiaries, affiliates, and distributors harmless against all claims, costs, damages, and expenses, and reasonable attorney fees arising out of, directly or indirectly, any claim of personal injury or death associated with such unintended or unauthorized use, even if such claim alleges that **onsemi** was negligent regarding the design or manufacture of the part. **onsemi** is an Equal Opportunity/Affirmative Action Employer. This literature is subject to all applicable copyright laws and is not for resale in any manner.

## ADDITIONAL INFORMATION

**TECHNICAL PUBLICATIONS**:
**Technical Library:** www.onsemi.com/design/resources/technical−documentation
**onsemi Website:** www.onsemi.com

**ONLINE SUPPORT**: www.onsemi.com/support
**For additional information, please contact your local Sales Representative at** www.onsemi.com/support/sales