ON Semiconductor

Is Now



To learn more about onsemi™, please visit our website at
www.onsemi.com

onsemi and onsemi and other names, marks, and brands are registered and/or common law trademarks of Semiconductor Components Industries, LLC dba "**onsemi**" or its affiliates and/or subsidiaries in the United States and/or other countries. **onsemi** owns the rights to a number of patents, trademarks, copyrights, trade secrets, and other intellectual property. A listing of **onsemi** product/patent coverage may be accessed at www.onsemi.com/site/pdf/Patent-Marking.pdf. **onsemi** reserves the right to make changes at any time to any products or information herein, without notice. The information herein is provided "as-is" and **onsemi** makes no warranty, representation or guarantee regarding the accuracy of the information, product features, availability, functionality, or suitability of its products for any particular purpose, nor does **onsemi** assume any liability arising out of the application or use of any product or circuit, and specifically disclaims any and all liability, including without limitation special, consequential or incidental damages. Buyer is responsible for its products and applications using **onsemi** products, including compliance with all laws, regulations and safety requirements or standards, regardless of any support or applications information provided by **onsemi**. "Typical" parameters which may be provided in **onsemi** data sheets and/or specifications can and do vary in different applications and actual performance may vary over time. All operating parameters, including "Typicals" must be validated for each customer application by customer's technical experts. **onsemi** does not convey any license under any of its intellectual property rights nor the rights of others. **onsemi** products are not designed, intended, or authorized for use as a critical component in life support systems or any FDA Class 3 medical devices or medical devices with a same or similar classification in a foreign jurisdiction or any devices intended for implantation in the human body. Should Buyer purchase or use **onsemi** products for any such unintended or unauthorized application, Buyer shall indemnify and hold **onsemi** and its officers, employees, subsidiaries, affiliates, and distributors harmless against all claims, costs, damages, and expenses, and reasonable attorney fees arising out of, directly or indirectly, any claim of personal injury or death associated with such unintended or unauthorized use, even if such claim alleges that **onsemi** was negligent regarding the design or manufacture of the part. **onsemi** is an Equal Opportunity/Affirmative Action Employer. This literature is subject to all applicable copyright laws and is not for resale in any manner. Other names and brands may be claimed as the property of others.

CAT823, CAT824, CAT825

System Supervisory Voltage Reset with Watchdog and Manual Reset

ON Semiconductor®

http://onsemi.com



SC−70
SD SUFFIX
CASE 419AC



TSOT−23
TD SUFFIX
CASE 419AE

Description

The CAT823, CAT824, and CAT825 provide basic reset and monitoring functions for the electronic systems. Each device monitors the system voltage and maintains a reset output until that voltage reaches the device's specified trip value and then maintains the reset output active condition until the device's internal timer, after a minimum timer of 140 ms; to allow the systems power supply to stabilize.

The CAT823 and CAT824 also have a watchdog input which can be used to monitor a system signal and cause a reset to be issued if the signal fails to change state prior to a timeout condition.

The CAT823 and CAT825 also provide a manual reset input which can be used to initiate reset if pulled low. This input can be directly attached to a push−button or a processor signal.

Features

- Automatically Restarts Microprocessor after Power Failure
- Monitors Pushbutton for External Override
- Accurate Under Voltage System Monitoring
- Brownout Detection System Reset for use with 3.0, 3.3, and 5.0 Volt Systems
- Pin and Function Compatible with the MAX823/24/25 Products
- Operating Range from −40°C to +85°C
- Available in TSOT−23 5−lead and SC−70 Packages
- These Devices are Pb−Free, Halogen Free/BFR Free and are RoHS Compliant

Applications

- Microprocessor and Microcontroller Based Systems
- Intelligent Instruments
- Control Systems
- Critical μP Monitors
- Portable Equipment

PIN FUNCTIONS

Pin Name	Function
$\overline{\text{RESET}}$	CMOS Push−Pull Active Low Reset Output
GND	Ground
$\overline{\text{MR}}$	Manual Reset input − Pulled high Internally by a 52 kΩ resistor designed to be driven low by a mechanical pushbutton, open drain output or CMOS output.
RESET	CMOS Push−Pull Active High Reset Output
WDI	Watchdog Timer Input − Designed to be driven by a processor output or can be disabled by tri−stating or leaving open.
V_{CC}	Power Supply

PIN CONNECTIONS

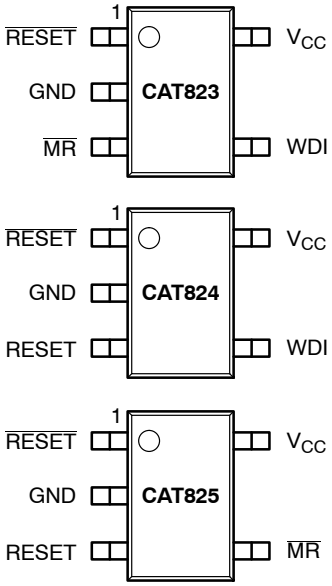

(Top Views)

MARKING DIAGRAM

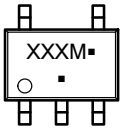

XXX = Specific Device Code
M = Date Code
▪ = Pb−Free Package*

(*Note: Microdot may be in either location)

ORDERING INFORMATION

See detailed ordering and shipping information in the package dimensions section on page 11 of this data sheet.

© Semiconductor Components Industries, LLC, 2012

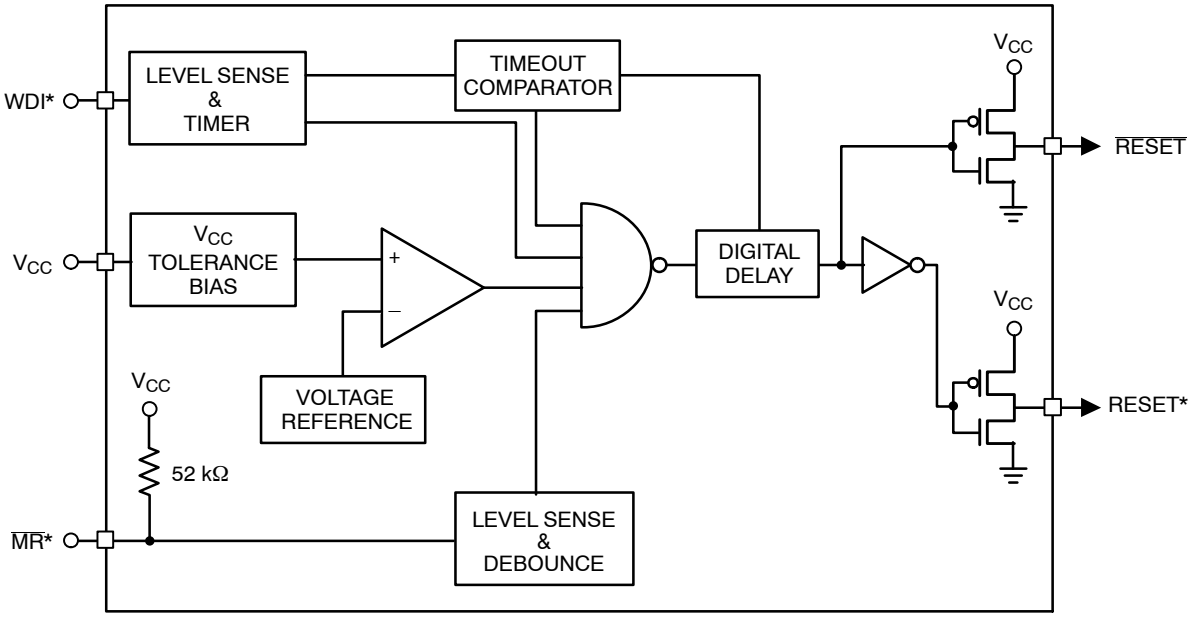

* Functions Available by Device

Figure 1. Block Diagram

Device	$\overline{\text{RESET}}$	RESET	$\overline{\text{MR}}$	WDI
CAT823	x		x	x
CAT824	x	x		x
CAT825	x	x	x	

Table 1. ABSOLUTE MAXIMUM RATINGS

Parameters	Ratings	Units
Supply Voltage	6	V
All other pins	−0.3 to (V_{CC} + 0.3)	V
Input Current, V_{CC}	20	mA
Output Current RESET, $\overline{\text{RESET}}$	20	mA
Continuous Power Dissipations (T_A = +70°C) SC−70 5−lead (derate 3.1 mW/°C above +70°C) TSOT−23 5−lead (derate 7.1 mW/°C above +70°C)	 247 571	mW
Storage Temperature	−65 to 150	°C
Operating Ambient Temperature	−40 to +85	°C
Lead Soldering (10 seconds max)	+300	°C
ESD Rating: Low Voltage Pins Human Body Model Machine Model	 2000 200	V

Stresses exceeding Maximum Ratings may damage the device. Maximum Ratings are stress ratings only. Functional operation above the Recommended Operating Conditions is not implied. Extended exposure to stresses above the Recommended Operating Conditions may affect device reliability.

Table 2. RECOMMENDED OPERATING CONDITIONS

Parameter	Range	Units
V_{CC} (T_A = 0°C to +70°C)	1.0 to 5.5	V
V_{CC} (T_A = −40°C to +85°C)	1.2 to 5.5	V
All Other Pins	−0.1 to (V_{CC} + 0.1)	V
Ambient Temperature	−40 to +85	°C

Table 3. ELECTRICAL OPERATING CHARACTERISTICS (DC Characteristics: V_{CC} = 3.0 V to 5.5 V for L/M versions; V_{CC} = 2.0 V to 3.6 V for the R/S/T/U/Y/Z version, −40°C ≤ T_A ≤ +85°C unless otherwise noted. Typical Values at T_A = 25°C and V_{CC} = 5 V for L/M versions; V_{CC} = 3.3 V for the T/S versions; V_{CC} = 3.0 V for the R version; and V_{CC} = 2.5 V for the U/Y/Z versions.) (Note 1)

Symbol	Parameter	Conditions	Min	Typ	Max	Units
I_{CC}	Supply Current	CAT823 (L/M Versions) CAT824 (L/M Versions)		6	17	μA
		CAT823 (R/S/T/Y/Z Versions) CAT824 (R/S/T/U/Y/Z Versions)		4	12	
		CAT825 (L/M Versions)		3	8	
		CAT825 (R/S/T/Y/Z Versions)		2	6	
V_{RST}	Reset Threshold	CAT82_L at −40°C ≤ T_A ≤ +85°C	4.50	4.63	4.75	V
		CAT82_M at −40°C ≤ T_A ≤ +85°C	4.25	4.38	4.50	
		CAT82_T at −40°C ≤ T_A ≤ +85°C	3.00	3.08	3.15	
		CAT82_S at −40°C ≤ T_A ≤ +85°C	2.85	2.93	3.00	
		CAT82_R at −40°C ≤ T_A ≤ +85°C	2.55	2.63	2.70	
		CAT82_Z at −40°C ≤ T_A ≤ +85°C	2.25	2.32	2.38	
		CAT82_Y at −40°C ≤ T_A ≤ +85°C	2.13	2.19	2.25	
		CAT824U at −40°C ≤ T_A ≤ +85°C	1.95	2.00	2.05	
	Reset Threshold Tempco			40		ppm/°C
	Reset Threshold Hysteresis	CAT82_L/M		10		mV
		CAT82_R/S/T/Y/Z, CAT824U		5		
t_{RD}	V_{CC} to Reset Delay (Note 2)	V_{CC} = V_{TH} to (V_{TH} − 100 mV)		20		μs
t_{RP}	Reset Active Timeout Period		140	200	400	ms
V_{OH}	$\overline{\text{RESET}}$ Output High Voltage	CAT82_L/M, V_{CC} = $V_{RST\ max}$, I_{SOURCE} = −120 μA	V_{CC} − 1.5 V			V
		CAT82_T/S/R/Z/Y, CAT824U, V_{CC} = $V_{RST\ max}$, I_{SOURCE} = −30 μA	0.8 x V_{CC}			
V_{OL}	$\overline{\text{RESET}}$ Output Low Voltage	CAT82_L/M, V_{CC} = $V_{RST\ min}$, I_{SINK} = 3.2 mA			0.4	V
		CAT82_T/S/R/Z/Y, CAT824U, V_{CC} = $V_{RST\ min}$, I_{SINK} = 1.2 mA			0.3	
		T_A = 0°C to +70°C, V_{CC} = 1 V, V_{CC} falling, I_{SINK} = 50 μA			0.3	
		T_A = T_{MIN} to T_{MAX}, V_{CC} = 1.2 V, V_{CC} falling, I_{SINK} = 100 μA			0.3	
I_{SOURCE}	$\overline{\text{RESET}}$ Output Short−Circuit Current	CAT82_L/M, Reset = 0 V, V_{CC} = 5.5 V			1.5	mA
		CAT82_L/M, Reset = 0 V, V_{CC} = 3.6 V			0.8	
V_{OH}	Reset Output Voltage	V_{CC} > 1.8 V, I_{SOURCE} = −150 μA	0.8 x V_{CC}			V
V_{OL}		CAT824L/M & CAT825L/M, V_{CC} = $V_{RST\ max}$, I_{SINK} = 3.2 mA			0.4	
		CAT824R/S/T/U/Y/Z & CAT825R/S/T/Y/Z, V_{CC} = $V_{RST\ max}$, I_{SINK} = 1.2 mA			0.3	

1. Over−temperature limits are guaranteed by design and not production tested.
2. The RESET short−circuit current is the maximum pull−up current when reset is driven low by a bidirectional output.
3. WDI is internally serviced within the watchdog period if WDI is left open.
4. The WDI input current is specified as an average input current when the WDI input is driven high or low. The WDI input if connected to a three−stated output device can be disabled in the tristate mode as long as the leakage current is less than 10 μA and a maximum capacitance of less than 200 pF. To clock the WDI input in the active mode the drive device must be able to source or sink at least 200 μA when active.

Table 3. ELECTRICAL OPERATING CHARACTERISTICS (DC Characteristics: V_{CC} = 3.0 V to 5.5 V for L/M versions; V_{CC} = 2.0 V to 3.6 V for the R/S/T/U/Y/Z version, −40°C ≤ T_A ≤ +85°C unless otherwise noted. Typical Values at T_A = 25°C and V_{CC} = 5 V for L/M versions; V_{CC} = 3.3 V for the T/S versions; V_{CC} = 3.0 V for the R version; and V_{CC} = 2.5 V for the U/Y/Z versions.) (Note 1)

Symbol	Parameter	Conditions	Min	Typ	Max	Units
WATCHDOG INPUT (CAT823 & CAT824)						
t_{WD}	Watchdog Timeout Period		1.12	1.60	3.20	s
t_{WDI}	WDI Pulse Width	V_{IL} = 0.4 V, V_{IH} = 0.8 x V_{CC}	50			ns
V_{IL}	WDI Input Voltage (Note 3)				0.3 x V_{CC}	V
V_{IH}			0.7 x V_{CC}			
	WDI Input Current (Note 4)	WDI = V_{CC}, Time Average		120	160	μA
		WDI = 0 V, Time Average	−20	−15		
MANUAL RESET INPUT (CAT823 & CAT825)						
V_{IL}	$\overline{MR}$ Input Voltage				0.3 x V_{CC}	V
V_{IH}			0.7 x V_{CC}			
t_{PB}	$\overline{MR}$ Pulse Width		1			μs
t_{PDLY}	$\overline{MR}$ low to Reset Delay				5	μs
	$\overline{MR}$ Noise Immunity	Pulse Width with No Reset		100		ns
	$\overline{MR}$ Pullup Resistance (internal)		35	52	75	kΩ

1. Over−temperature limits are guaranteed by design and not production tested.
2. The RESET short−circuit current is the maximum pull−up current when reset is driven low by a bidirectional output.
3. WDI is internally serviced within the watchdog period if WDI is left open.
4. The WDI input current is specified as an average input current when the WDI input is driven high or low. The WDI input if connected to a three−stated output device can be disabled in the tristate mode as long as the leakage current is less than 10 μA and a maximum capacitance of less than 200 pF. To clock the WDI input in the active mode the drive device must be able to source or sink at least 200 μA when active.

TYPICAL ELECTRICAL OPERATING CHARACTERISTICS

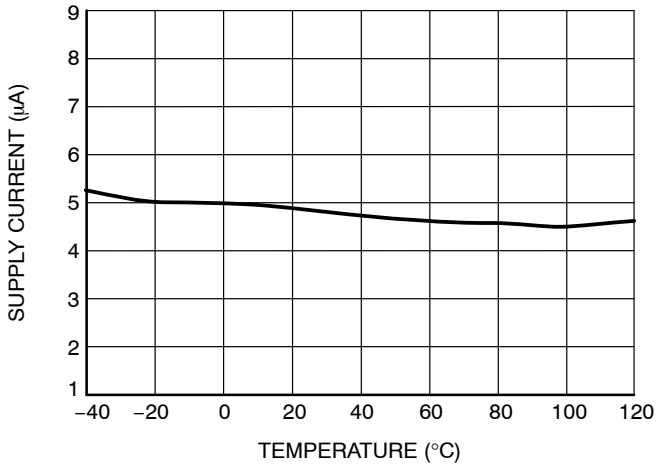

Figure 2. V_{CC} Supply Current vs. Temperature

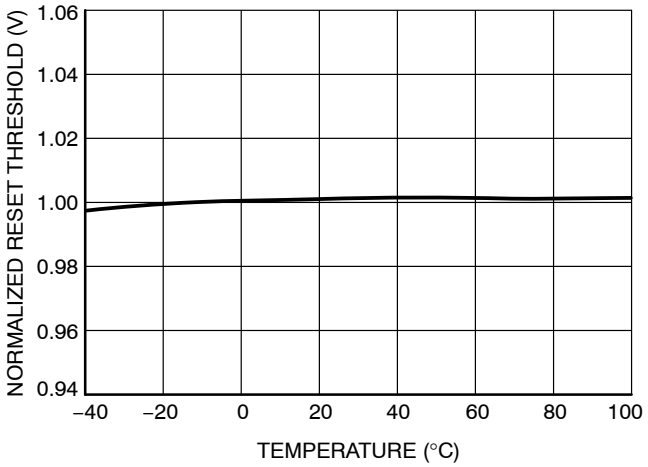

Figure 3. Normalized Reset Threshold Voltage vs. Temperature

FUNCTIONAL DESCRIPTION

Processor RESET

The CAT823−825 detect supply voltage (V_{CC}) conditions that are below the specified voltage trip value (V_{RST}) and provide a reset output to maintain correct system operation. On power−up, $\overline{\text{RESET}}$ (and RESET if available) are kept active for a minimum delay t_{RP} of 140 ms after the supply voltage (V_{CC}) rises above V_{RST} to allow the power supply and processor to stabilize. When V_{CC} drops below the voltage trip value (V_{RST}), the reset output signals $\overline{\text{RESET}}$ (and RESET) are pulled active. $\overline{\text{RESET}}$ (and RESET if available) is specifically designed to provide the reset input signals for processors. This provides reliable and consistent operation as power is turned on, off or during brownout conditions by maintaining the processor operation in known conditions.

Manual RESET

The CAT823 and CAT825 each have a Manual Reset ($\overline{\text{MR}}$) input to allow for alternative control of the reset outputs. The $\overline{\text{MR}}$ input is designed for direct connection to a pushbutton (see Figure 4). The $\overline{\text{MR}}$ input is internally pulled up by 52 kΩ resistor and must be pulled low to cause the reset outputs to go active. Internally, this input is debounced and timed such that $\overline{\text{RESET}}$ (and RESET) signals of at least 140 ms minimum will be generated. The min 140 ms t_{RP} delay commences as the Manual Reset input is released from the low level. (see Figure 5)

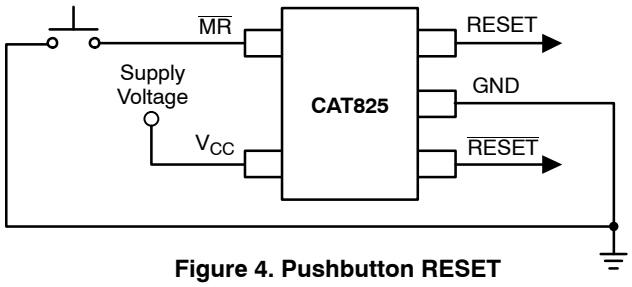

Figure 4. Pushbutton RESET

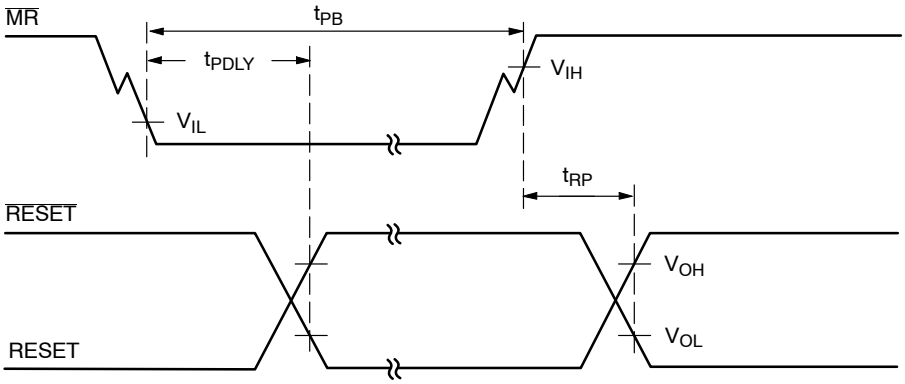

Figure 5. Timing Diagram – Pushbutton RESET

Watchdog Timer

The CAT823 and CAT824 provide a Watchdog input (WDI). The watchdog timer function forces $\overline{\text{RESET}}$ (and RESET in the CAT824) signals active when the WDI input does not have a transition from low−to−high or high−to−low within 1.12 seconds. Timeout of the watchdog starts when $\overline{\text{RESET}}$ (RESET on the CAT824) becomes inactive. If a transition occurs on the WDI input pin prior to the watchdog time−out, the watchdog timer is reset and begins to time−out again. If the watchdog timer is allowed to time−out, then the reset output(s) will go active for t_{RP} and once released will repeat the watchdog timeout process.

Figure 6 below shows a typical implementation of a watchdog function. Any processor signal that repeats dependant on the normal operation of the processor or directed by the software operating on the processor can be used to strobe the watchdog input. The most reliable is a dedicated I/O output transitioned by a specific software instruction.

The watchdog can be disabled by floating (or tri−stating) the WDI input (see Figure 7). If the watchdog is disabled the WDI pin will be pulled low for the first 7/8th's of the watchdog period (t_{WD}) and pulled high for the last 1/8th of the watchdog period. This pulling low of the WDI input and then high is used to detect an open or tri−state condition and will continue to repeat until the WDI input is driven high or low.

For most efficient operation of devices with the watchdog function the WDI input should be held low the majority of the time and only strobed high as required to reset the watchdog timer.

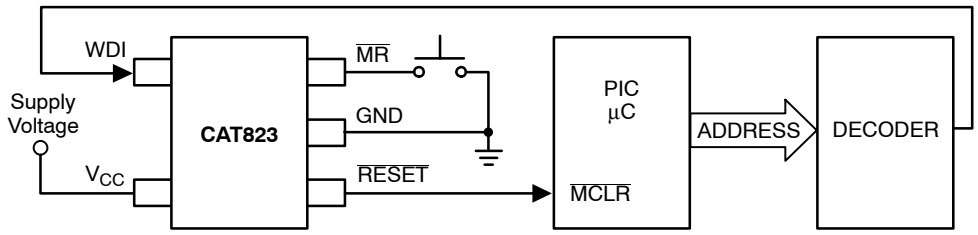

Figure 6. Watchdog Timer

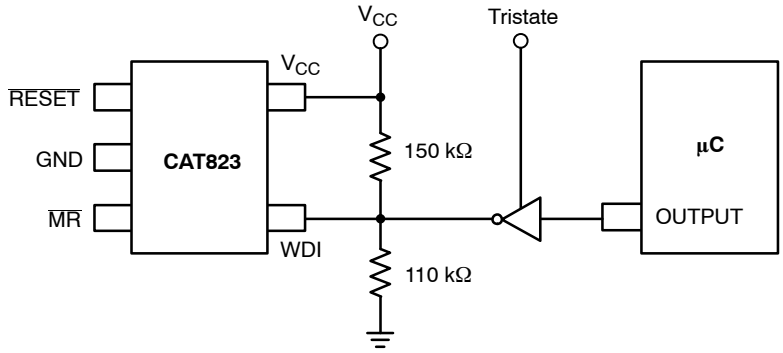

Figure 7. Watchdog Disable Circuit

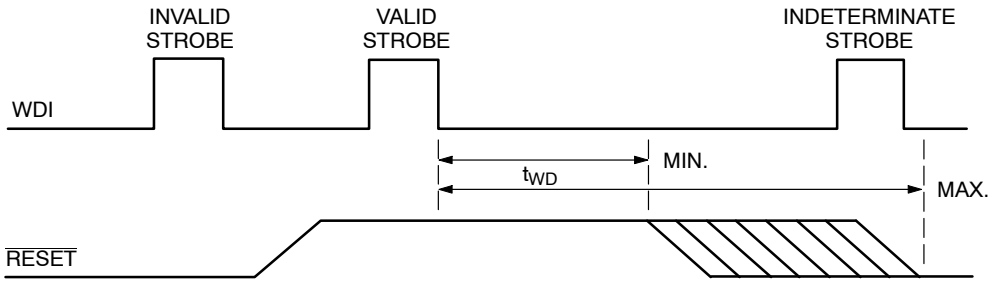

Figure 8. Timing Diagram – Strobe Input

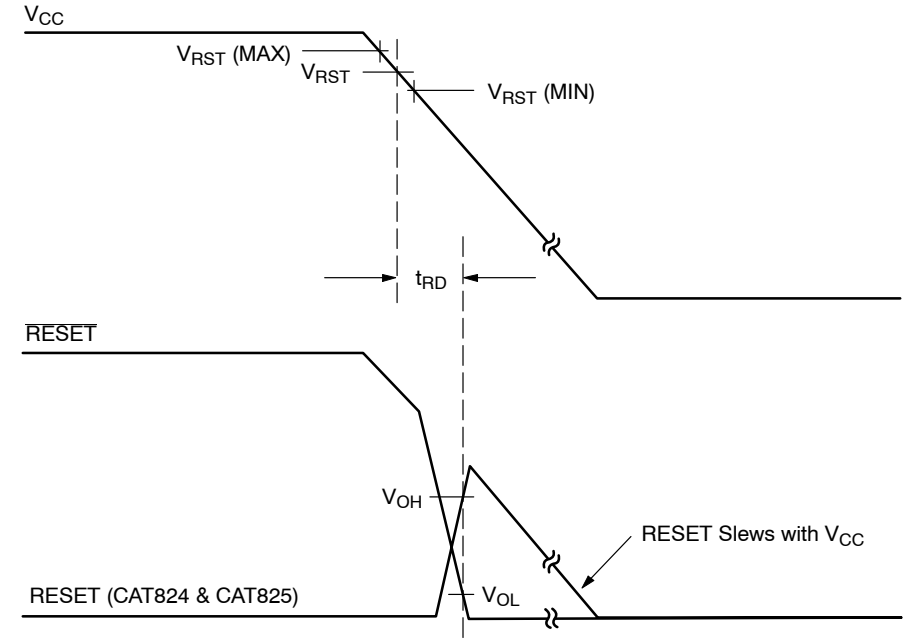

Figure 9. Timing Diagram – Power Down

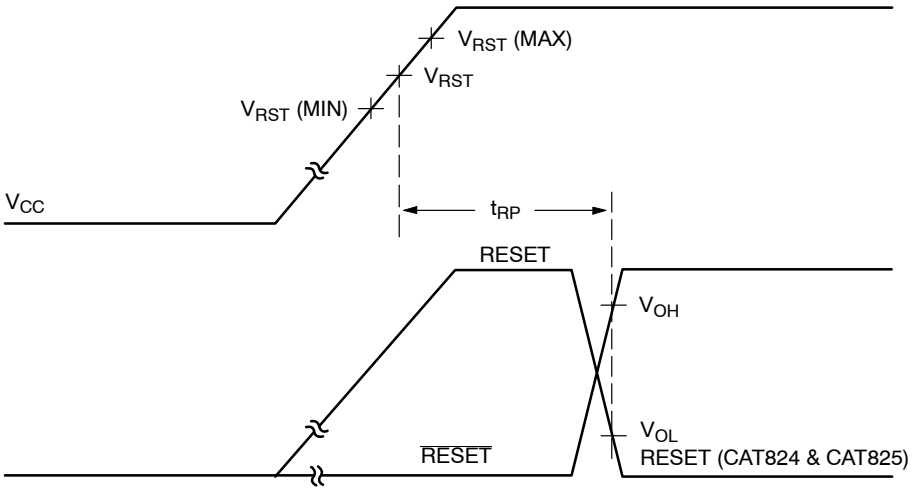

Figure 10. Timing Diagram – Power Up

Application Notes

μP's with Bidirectional Reset Pins

The $\overline{\text{RESET}}$ output can be pulled low by processors like the 68HC11 allowing for a system reset issued by the processor. The maximum pullup current that can be sourced by the CAT82_L/M is 1.5 mA (and by the CAT82_T/R/S/Z/Y is 800 μA) allowing the processor to pull the output low even when the CAT82x is pulling it high.

Power Transients

Generally short duration negative−going transients of less than 2 μs on the power supply at V_{RST} minimum will not cause a reset condition. However the lower the voltage of the transient the shorter the required time to cause a reset output. These issues can usually be remedied by the proper location of bypass capacitance on the circuit board.

Output Valid Conditions

The $\overline{\text{RESET}}$ output uses a push−pull output which can maintain a valid output down to a V_{CC} of 1.0 volts. To sink current below 0.8 V a resistor can be connected from $\overline{\text{RESET}}$ to Ground (see Figure 11.) This arrangement will maintain a valid value on the $\overline{\text{RESET}}$ output during both power up and down but will draw current when the $\overline{\text{RESET}}$ output is in the high state. A resistor value of about 100 kΩ should be adequate in most situations to maintain a low condition valid output down to V_{CC} equal to 0 V.

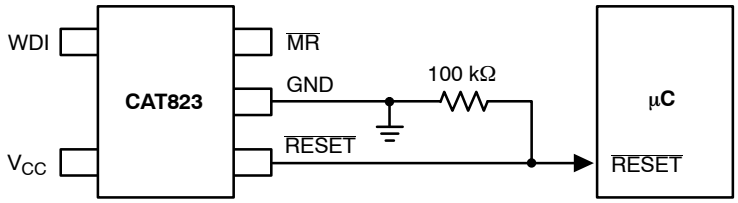

Figure 11. $\overline{\text{RESET}}$ Valid to 0 Volts V_{CC}

PACKAGE DIMENSIONS

SC−70, 5 Lead, 1.25x2
CASE 419AC−01
ISSUE O

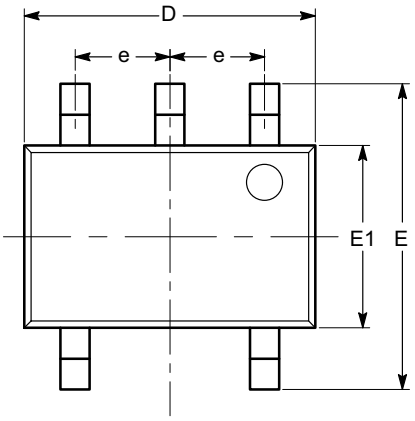

TOP VIEW

SYMBOL	MIN	NOM	MAX
A	0.80		1.10
A1	0.00		0.10
A2	0.80		1.00
b	0.15		0.30
c	0.10		0.18
D	1.80	2.00	2.20
E	1.80	2.10	2.40
E1	1.15	1.25	1.35
e		0.65 BSC	
L	0.26	0.36	0.46
L1		0.42 REF	
L2		0.15 BSC	
θ	0°		8°
θ1	4°		10°

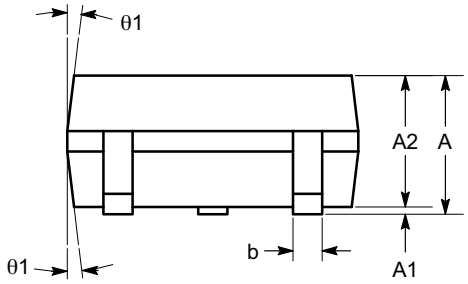

SIDE VIEW

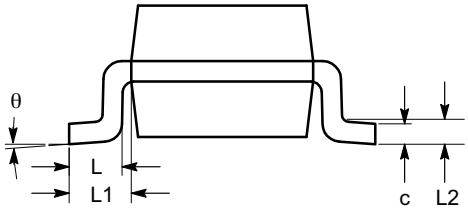

END VIEW

Notes:
(1) All dimensions are in millimeters. Angles in degrees.
(2) Complies with JEDEC MO-203.

PACKAGE DIMENSIONS

TSOT−23, 5 LEAD
CASE 419AE−01
ISSUE O

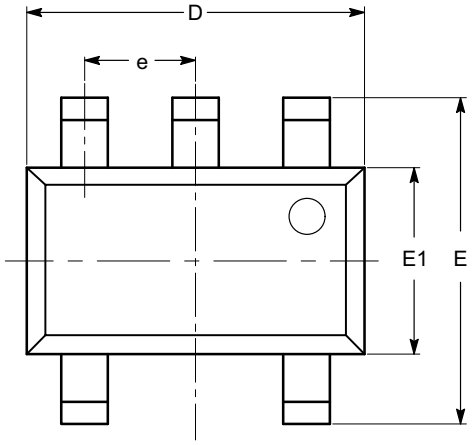

TOP VIEW

SYMBOL	MIN	NOM	MAX
A			1.00
A1	0.01	0.05	0.10
A2	0.80	0.87	0.90
b	0.30		0.45
c	0.12	0.15	0.20
D	2.90 BSC		
E	2.80 BSC		
E1	1.60 BSC		
e	0.95 TYP		
L	0.30	0.40	0.50
L1	0.60 REF		
L2	0.25 BSC		
θ	0°		8°

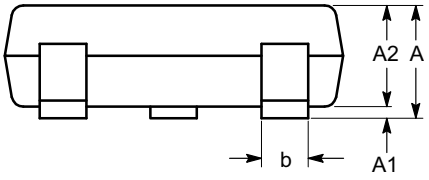

SIDE VIEW

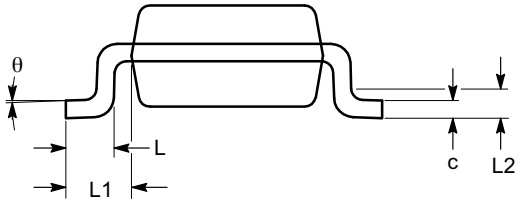

END VIEW

Notes:
(1) All dimensions are in millimeters. Angles in degrees.
(2) Complies with JEDEC MO-193.

ORDERING INFORMATION

Order Number		Top Mark	Inputs		Outputs			Quantity per Reel
NiPdAu	Voltage	NiPdAu	MR	WDI	$\overline{\text{RESET}}$	RESET	Package	
CAT823LTDI−GT3	4.63 V	ETA	*	*	*		TSOT−23−5	3,000
CAT823MTDI−GT3	4.38 V	ETA	*	*	*			
CAT823TTDI−GT3	3.08 V	ETA	*	*	*			
CAT823STDI−GT3	2.93 V	ETA	*	*	*			
CAT823RTDI−GT3	2.63 V	ETA	*	*	*			
CAT823ZTDI−GT3	2.32 V	ETA	*	*	*			
CAT823YTDI−GT3	2.19 V	ETA	*	*	*			
CAT823LSDI−GT3	4.63 V	ETA	*	*	*		SC−70−5	
CAT823MSDI−GT3	4.38 V	ETA	*	*	*			
CAT823TSDI−GT3	3.08 V	ETA	*	*	*			
CAT823SSDI−GT3	2.93 V	ETA	*	*	*			
CAT823RSDI−GT3	2.63 V	ETA	*	*	*			
CAT823ZSDI−GT3	2.32 V	ETA	*	*	*			
CAT823YSDI−GT3	2.19 V	ETA	*	*	*			
CAT824LTDI−GT3	4.63 V	EFA		*	*	*	TOST−23−5	3,000
CAT824MTDI−GT3	4.38 V	EFA		*	*	*		
CAT824TTDI−GT3	3.08 V	EFA		*	*	*		
CAT824STDI−GT3	2.93 V	EFA		*	*	*		
CAT824RTDI−GT3	2.63 V	EFA		*	*	*		
CAT824ZTDI−GT3	2.32 V	EFA		*	*	*		
CAT824YTDI−GT3	2.19 V	EFA		*	*	*		
CAT824UTDI−GT3	2.00 V	EFA		*	*	*		
CAT824LSDI−GT3	4.63 V	EFA		*	*	*	SC−70−5	
CAT824MSDI−GT3	4.38 V	EFA		*	*	*		
CAT824TSDI−GT3	3.08 V	EFA		*	*	*		
CAT824SSDI−GT3	2.93 V	EFA		*	*	*		
CAT824RSDI−GT3	2.63 V	EFA		*	*	*		
CAT824ZSDI−GT3	2.32 V	EFA		*	*	*		
CAT824YSDI−GT3	2.19 V	EFA		*	*	*		

5. All packages are RoHS−compliant (Lead−free, Halogen−free).
6. The standard lead finish is NiPdAu.
7. Contact factory for package availability.
8. For information on tape and reel specifications, including part orientation and tape sizes, please refer to our Tape and Reel Packaging Specifications Brochure, BRD8011/D.
9. For detailed information and a breakdown of device nomenclature and numbering systems, please see the ON Semiconductor Device Nomenclature document, TND310/D, available at www.onsemi.com

ORDERING INFORMATION

Order Number		Top Mark	Inputs		Outputs			
NiPdAu	Voltage	NiPdAu	MR	WDI	$\overline{\text{RESET}}$	RESET	Package	Quantity per Reel
CAT825LTDI−GT3	4.63 V	ECA	*		*	*	TSOT−23−5	3,000
CAT825MTDI−GT3	4.38 V	ECA	*		*	*		
CAT825TTDI−GT3	3.08 V	ECA	*		*	*		
CAT825STDI−GT3	2.93 V	ECA	*		*	*		
CAT825RTDI−GT3	2.63 V	ECA	*		*	*		
CAT825ZTDI−GT3	2.32 V	ECA	*		*	*		
CAT825YTDI−GT3	2.19 V	ECA	*		*	*		
CAT825LSDI−GT3	4.63 V	ECA	*		*	*	SC−70−5	
CAT825MSDI−GT3	4.38 V	ECA	*		*	*		
CAT825TSDI−GT3	3.08 V	ECA	*		*	*		
CAT825SSDI−GT3	2.93 V	ECA	*		*	*		
CAT825RSDI−GT3	2.63 V	ECA	*		*	*		
CAT825ZSDI−GT3	2.32 V	ECA	*		*	*		
CAT825YSDI−GT3	2.19 V	ECA	*		*	*		

5. All packages are RoHS−compliant (Lead−free, Halogen−free).
6. The standard lead finish is NiPdAu.
7. Contact factory for package availability.
8. For information on tape and reel specifications, including part orientation and tape sizes, please refer to our Tape and Reel Packaging Specifications Brochure, BRD8011/D.
9. For detailed information and a breakdown of device nomenclature and numbering systems, please see the ON Semiconductor Device Nomenclature document, TND310/D, available at www.onsemi.com

ON Semiconductor and ON are registered trademarks of Semiconductor Components Industries, LLC (SCILLC). SCILLC reserves the right to make changes without further notice to any products herein. SCILLC makes no warranty, representation or guarantee regarding the suitability of its products for any particular purpose, nor does SCILLC assume any liability arising out of the application or use of any product or circuit, and specifically disclaims any and all liability, including without limitation special, consequential or incidental damages. “Typical” parameters which may be provided in SCILLC data sheets and/or specifications can and do vary in different applications and actual performance may vary over time. All operating parameters, including “Typicals” must be validated for each customer application by customer’s technical experts. SCILLC does not convey any license under its patent rights nor the rights of others. SCILLC products are not designed, intended, or authorized for use as components in systems intended for surgical implant into the body, or other applications intended to support or sustain life, or for any other application in which the failure of the SCILLC product could create a situation where personal injury or death may occur. Should Buyer purchase or use SCILLC products for any such unintended or unauthorized application, Buyer shall indemnify and hold SCILLC and its officers, employees, subsidiaries, affiliates, and distributors harmless against all claims, costs, damages, and expenses, and reasonable attorney fees arising out of, directly or indirectly, any claim of personal injury or death associated with such unintended or unauthorized use, even if such claim alleges that SCILLC was negligent regarding the design or manufacture of the part. SCILLC is an Equal Opportunity/Affirmative Action Employer. This literature is subject to all applicable copyright laws and is not for resale in any manner.

PUBLICATION ORDERING INFORMATION

LITERATURE FULFILLMENT:
Literature Distribution Center for ON Semiconductor
P.O. Box 5163, Denver, Colorado 80217 USA
Phone: 303−675−2175 or 800−344−3860 Toll Free USA/Canada
Fax: 303−675−2176 or 800−344−3867 Toll Free USA/Canada
Email: orderlit@onsemi.com

N. American Technical Support: 800−282−9855 Toll Free USA/Canada
Europe, Middle East and Africa Technical Support:
Phone: 421 33 790 2910
Japan Customer Focus Center
Phone: 81−3−5817−1050

ON Semiconductor Website: **www.onsemi.com**

Order Literature: http://www.onsemi.com/orderlit

For additional information, please contact your local Sales Representative

CAT823/D