Single 1 A High-Speed, Low-Side Gate Driver

FAN3111C, FAN3111E



SOT23−5
CASE 527AH

Description

The FAN3111 1 A gate driver is designed to drive an N−channel enhancement−mode MOSFET in low−side switching applications.

Two input options are offered: FAN3111C has dual CMOS inputs with thresholds referenced to V_{DD} for use with PWM controllers and other input−signal sources that operate from the same supply voltage as the driver. For use with low−voltage controllers and other inputsignal sources that operate from a lower supply voltage than the driver, that supply voltage may also be used as the reference for the input thresholds of the FAN3111E. This driver has a single, non−inverting, low−voltage input plus a DC input V_{XREF} for an external reference voltage in the range 2 to 5 V.

The FAN3111 is available in a lead−free finish industry−standard 5−pin SOT23.

Features

- 1.4 A Peak Sink/Source at V_{DD} = 12 V
- 1.1 A Sink/0.9 A Source at V_{OUT} = 6 V
- 4.5 to 18 V Operating Range
- FAN3111C Compatible with FAN3100C Footprint
- Two Input Configurations:
  - Dual CMOS Inputs Allow Configuration as Non−Inverting or Inverting with Enable Function
  - Single Non−Inverting, Low−Voltage Input for Compatibility with Low−Voltage Controllers
- Small Footprint Facilitates Distributed Drivers for Parallel Power Devices
- 15 ns Typical Delay Times
- 9 ns Typical Rise/8 ns Typical Fall times with 470 pF Load
- 5−Pin SOT23 Package
- Rated from –40°C to 125°C Ambient
- These Devices are Pb−Free and Halogen Free

Applications

- Switch−Mode Power Supplies
- Synchronous Rectifier Circuits
- Pulse Transformer Driver
- Logic to Power Buffer
- Motor Control

PIN ASSIGNMENT

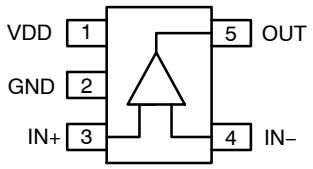

FAN3111C (Top View)

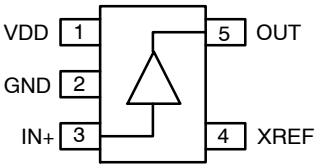

FAN3111E (Top View)

MARKING DIAGRAM

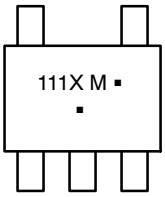

111X = Specific Device Code
X = C or E
M = Date Code
▪ = Pb−Free Package

(Note: Microdot may be in either location)

ORDERING INFORMATION

See detailed ordering and shipping information on page 16 of this data sheet.

© Semiconductor Components Industries, LLC, 2008

THERMAL CHARACTERISTICS (Note 1)

Package	Θ_{JL} (Note 2)	Θ_{JT} (Note 3)	Θ_{JA} (Note 4)	Ψ_{JB} (Note 5)	Ψ_{JT} (Note 6)	Unit
5−Pin SOT23	58	102	161	53	6	°C/W

1. Estimates derived from thermal simulation; actual values depend on the application.
2. Theta_JL (Θ_{JL}): Thermal resistance between the semiconductor junction and the bottom surface of all the leads (including any thermal pad) that are typically soldered to a PCB.
3. Theta_JT (Θ_{JT}): Thermal resistance between the semiconductor junction and the top surface of the package, assuming it is held at a uniform temperature by a top−side heatsink.
4. Theta_JA (Θ_{JA}): Thermal resistance between junction and ambient, dependent on the PCB design, heat sinking, and airflow. The value given is for natural convection with no heatsink using a 2S2P board, as specified in JEDEC standards JESD51−2, JESD51−5, and JESD51−7, as appropriate.
5. Psi_JB (Ψ_{JB}): Thermal characterization parameter providing correlation between semiconductor junction temperature and an application circuit board reference point for the thermal environment defined in Note 4. For the MLP−8 package, the board reference is defined as the PCB copper connected to the thermal pad and protruding from either end of the package. For the SOIC−8 package, the board reference is defined as the PCB copper adjacent to pin 6.
6. Psi_JT (Ψ_{JT}): Thermal characterization parameter providing correlation between the semiconductor junction temperature and the center of the top of the package for the thermal environment defined in Note 4.

PIN DEFINITIONS

Pin Number	Name	Description
1	VDD	Supply Voltage. Provides power to the IC.
2	GND	Ground. Common ground reference for input and output circuits.
3	IN+	Non−Inverting Input. Connect to VDD to enable output.
4	IN−	FAN3111C Inverting Input. Connect to GND to enable output.
	XREF	FAN3111E External Reference Voltage. Reference for input thresholds, 2 V to 5 V.
5	OUT	Gate Drive Output. Held low unless required inputs are present.

OUTPUT LOGIC WITH DUAL−INPUT CONFIGURATION

IN+	IN−	OUT
0 (Note 7)	0	0
0 (Note 7)	1 (Note 7)	0
1	0	1
1	1 (Note 7)	0

7. Default input signal if no external connection is made.

BLOCK DIAGRAMS

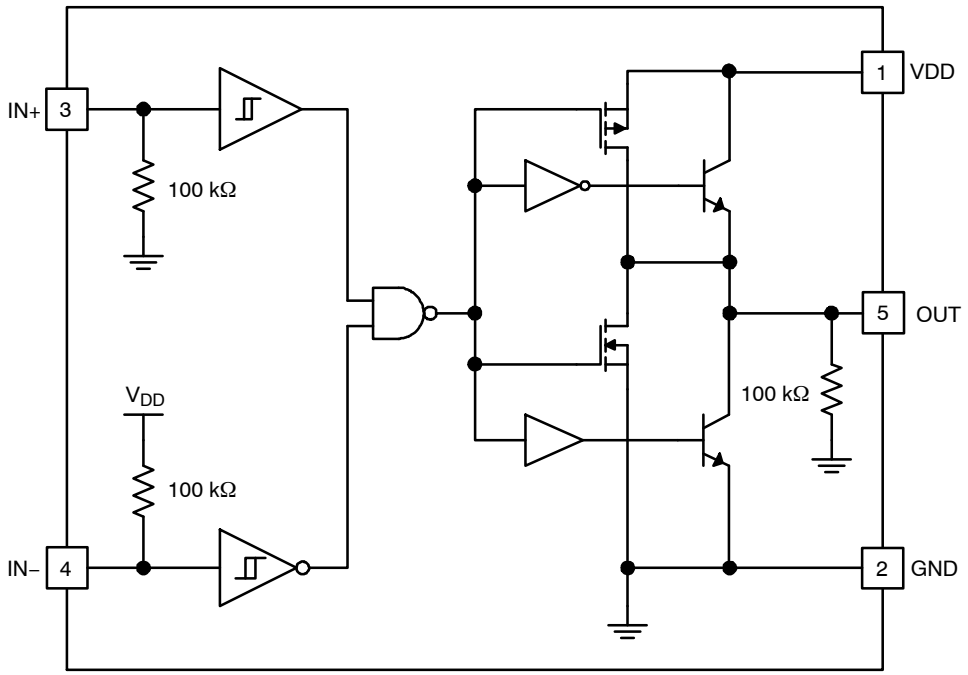

Figure 1. FAN3111C Simplified Block Diagram

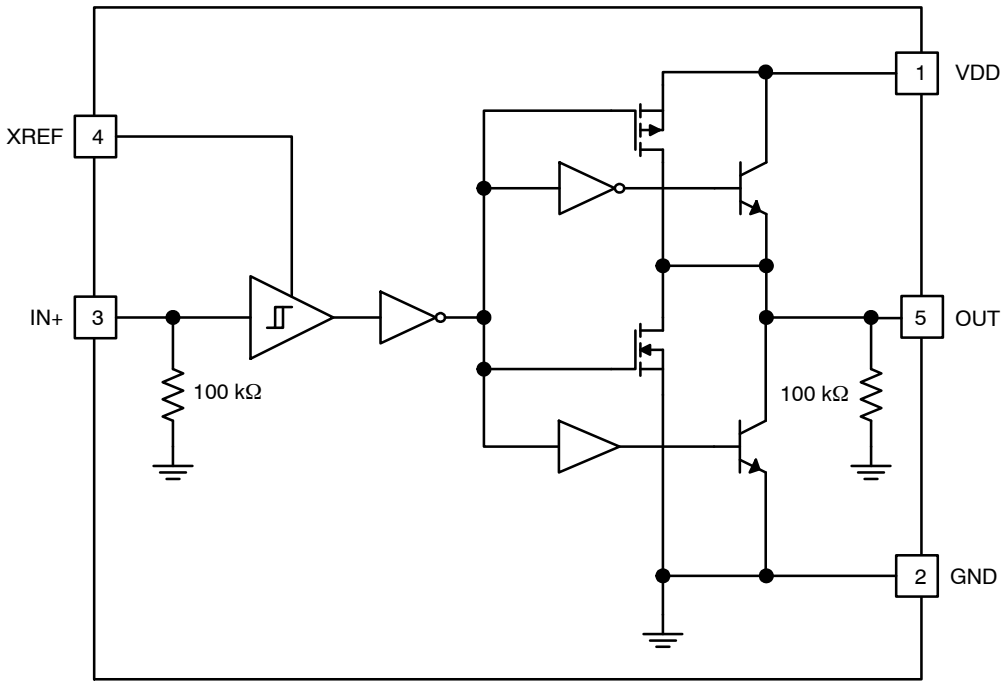

Figure 2. FAN3111E Simplified Block Diagram

ABSOLUTE MAXIMUM RATINGS

Symbol	Parameter		Min	Max	Unit
V_{DD}	VDD to GND		−0.3	20.0	V
V_{IN}	Voltage on IN to GND	FAN3111C	−0.3	V_{DD} + 0.3	V
		FAN3111E	−0.3	V_{XREF} + 0.3	V
V_{XREF}	Voltage on XREF to GND	FAN3111E	−0.3	5.5	V
V_{OUT}	Voltage on OUT to GND		−0.3	V_{DD} + 0.3	V
T_L	Lead Soldering Temperature (10 Seconds)		–	+260	°C
T_J	Junction Temperature		–	+150	°C
T_{STG}	Storage Temperature		−65	+150	°C

Stresses exceeding those listed in the Maximum Ratings table may damage the device. If any of these limits are exceeded, device functionality should not be assumed, damage may occur and reliability may be affected.

RECOMMENDED OPERATING CONDITIONS

Symbol	Parameter		Min	Max	Unit
V_{DD}	Supply Voltage Range		4.5	18.0	V
V_{IN}	Input Voltage IN	FAN3111C	0	V_{DD}	V
		FAN3111E	0	V_{XREF}	V
V_{XREF}	External Reference Voltage XREF	FAN3111E	2.0	5.0	V
T_A	Operating Ambient Temperature		−40	+125	°C

Functional operation above the stresses listed in the Recommended Operating Ranges is not implied. Extended exposure to stresses beyond the Recommended Operating Ranges limits may affect device reliability.

ELECTRICAL CHARACTERISTICS (V_{DD} = 12 V, V_{XREF} = 3.3 V, T_J = −40°C to +125°C unless otherwise noted. Currents are defined as positive into the device and negative out of the device.)

Symbol	Parameter	Test Condition	Min	Typ	Max	Unit
SUPPLY						
V_{DD}	Operating Range		4.5		18.0	V
I_{DD}	Static Supply Current	Inputs Not Connected		5	10	μA
INPUTS (FAN3111C)						
V_{IL_C}	IN Logic, Low−Voltage Threshold		30	38		$\%V_{DD}$
V_{IH_C}	IN Logic, High−Voltage Threshold			55	70	$\%V_{DD}$
I_{INL}	IN Current, Low	IN from 0 to V_{DD}	−1		175	μA
I_{INH}	IN Current, High	IN from 0 to V_{DD}	−175		1	μA
V_{HYS_C}	Input Hysteresis Voltage			17		$\%V_{DD}$
INPUTS (FAN3111E)						
V_{IL_E}	IN Logic, Low−Voltage Threshold		25	30		$\%V_{XREF}$
V_{IH_E}	IN Logic, High−Voltage Threshold			50	60	$\%V_{XREF}$
I_{INL}	IN Current, Low	IN from 0 to V_{XREF}	−1		50	μA
I_{INH}	IN Current, High	IN from 0 to V_{XREF}	−50		1	μA
V_{HYS_E}	Input Hysteresis Voltage			20		$\%V_{XREF}$
OUTPUTS						
I_{SINK}	OUT Current, Mid−Voltage, Sinking (Note 8)	OUT at V_{DD}/2, C_{LOAD} = 47 nF, f = 1 kHz		1.1		A
I_{SOURCE}	OUT Current, Mid−Voltage, Sourcing (Note 8)	OUT at V_{DD}/2, C_{LOAD} = 47 nF, f = 1 kHz		−0.9		A

ELECTRICAL CHARACTERISTICS (V_{DD} = 12 V, V_{XREF} = 3.3 V, T_J = −40°C to +125°C unless otherwise noted. Currents are defined as positive into the device and negative out of the device.) (continued)

Symbol	Parameter	Test Condition	Min	Typ	Max	Unit
OUTPUTS						
I_{PK_SINK}	OUT Current, Peak, Sinking (Note 8)	C_{LOAD} = 47 nF, f = 1kHz		1.4		A
I_{PK_SOURCE}	OUT Current, Peak, Sourcing (Note 8)	C_{LOAD} = 47 nF, f = 1 kHz		−1.4		A
t_{RISE}	Output Rise Time (Note 9)	C_{LOAD} = 470 pF		9	18	ns
t_{FALL}	Output Fall Time (Note 9)	C_{LOAD} = 470 pF		8	17	ns
t_{D1}, t_{D2}	Output Prop. Delay (Note 9)	**FAN3111C:** 0–12 V_{IN}, 1 V/ns Slew Rate		15	30	ns
		FAN3111E: 0–3.3 V_{IN}, 1 V/ns Slew Rate				
I_{RVS}	Output Reverse Current Withstand (Note 8)			250		mA

Product parametric performance is indicated in the Electrical Characteristics for the listed test conditions, unless otherwise noted. Product performance may not be indicated by the Electrical Characteristics if operated under different conditions.

8. Not tested in production.
9. *See Timing Diagrams*.

TIMING DIAGRAMS

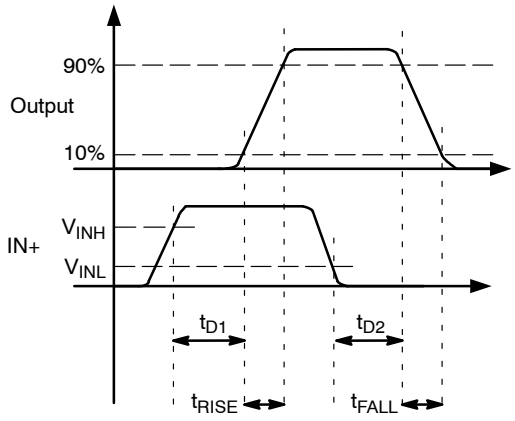

Figure 3. Non−Inverting Waveforms

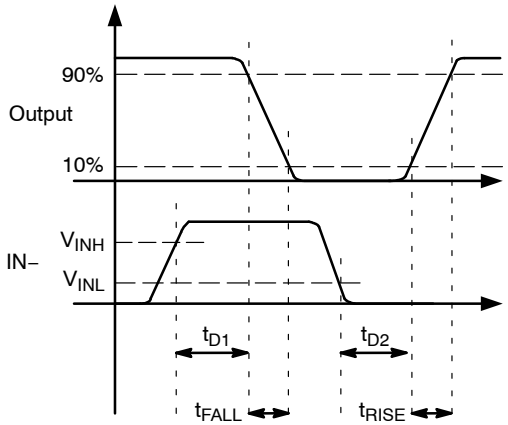

Figure 4. Inverting Waveforms

TYPICAL PERFORMANCE CHARACTERISTICS

(Typical characteristics are provided at 25°C and V_{DD} = 12 V and V_{XREF} = 3.3 V unless otherwise noted)

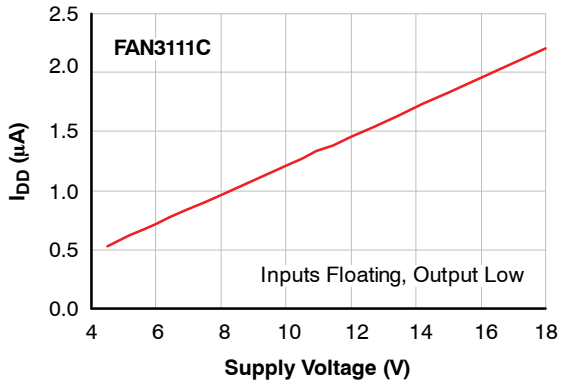

Figure 5. I_{DD} (Static) vs. Supply Voltage

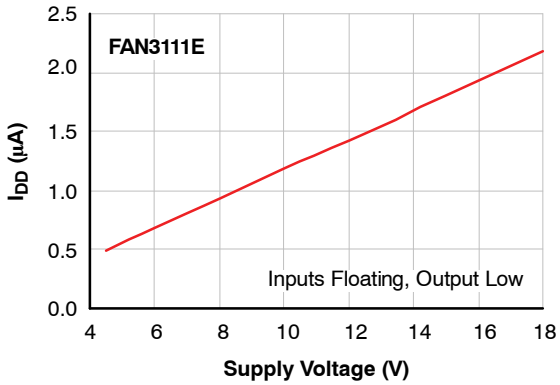

Figure 6. I_{DD} (Static) vs. Supply Voltage

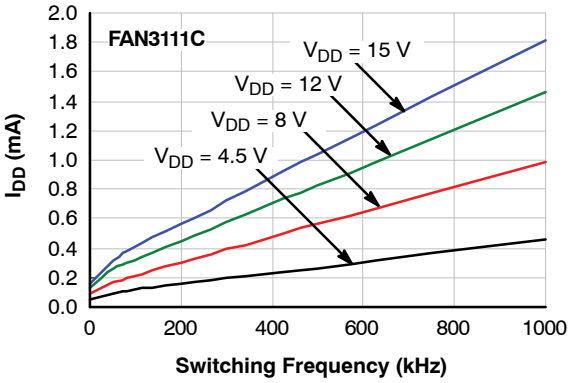

Figure 7. I_{DD} (No−Load) vs. Frequency

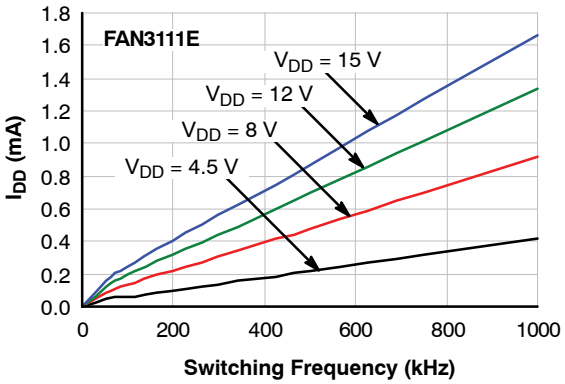

Figure 8. I_{DD} (No−Load) vs. Frequency

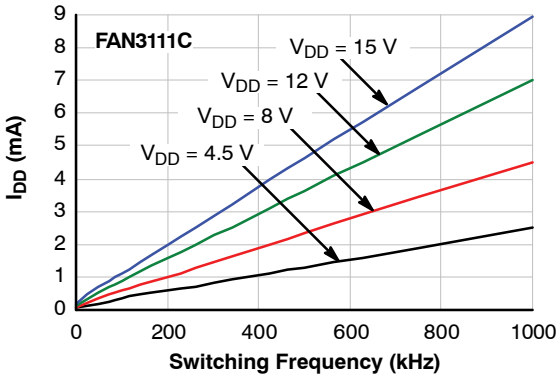

Figure 9. I_{DD} (470 pF Load) vs. Frequency

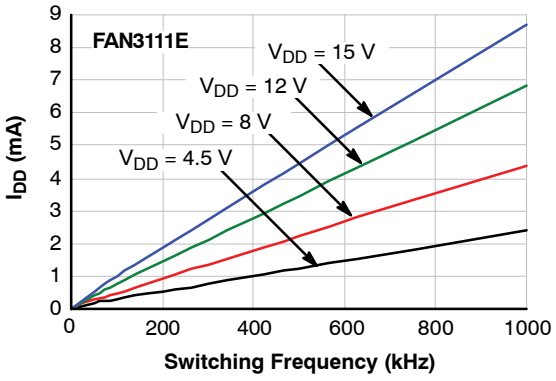

Figure 10. I_{DD} (470 pF Load) vs. Frequency

TYPICAL PERFORMANCE CHARACTERISTICS (continued)

(Typical characteristics are provided at 25°C and V_{DD} = 12 V and V_{XREF} = 3.3 V unless otherwise noted)

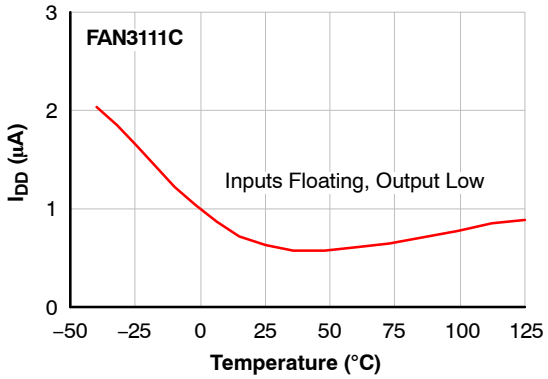

Figure 11. I_{DD} (Static) vs. Temperature

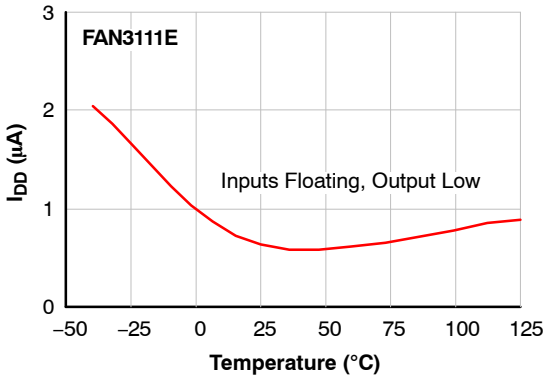

Figure 12. I_{DD} (Static) vs. Temperature

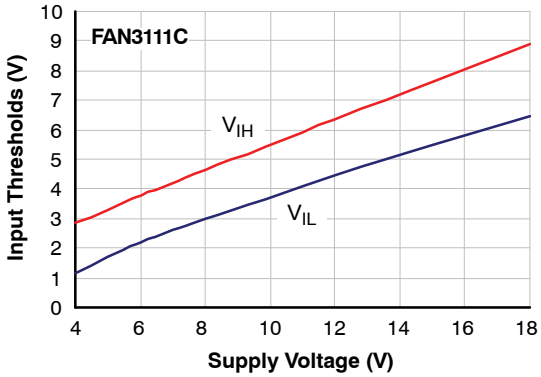

Figure 13. Input Thresholds vs. Supply Voltage

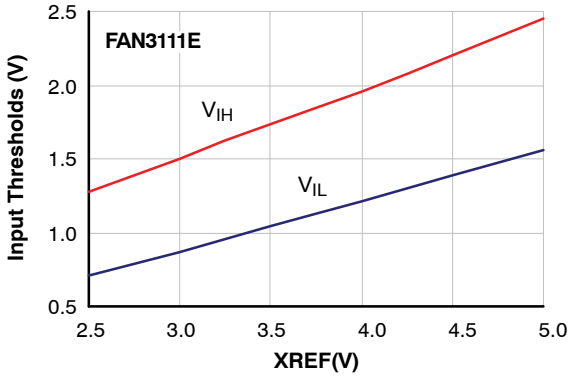

Figure 14. Input Thresholds vs. XREF Voltage

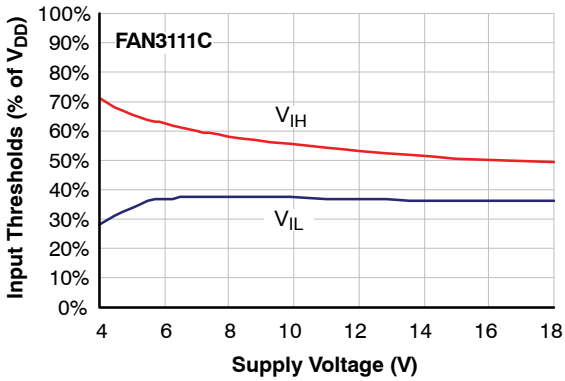

Figure 15. Input Thresholds % vs. Supply Voltage

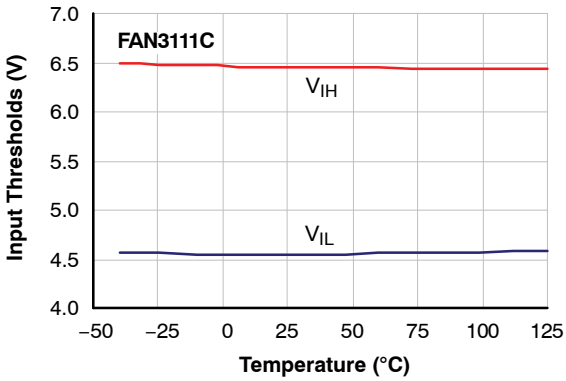

Figure 16. Input Thresholds vs. Temperature

TYPICAL PERFORMANCE CHARACTERISTICS (continued)

(Typical characteristics are provided at 25°C and V_{DD} = 12 V and V_{XREF} = 3.3 V unless otherwise noted)

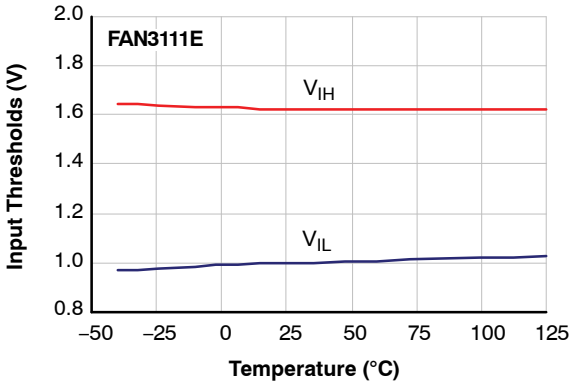

Figure 17. Input Thresholds vs. Temperature

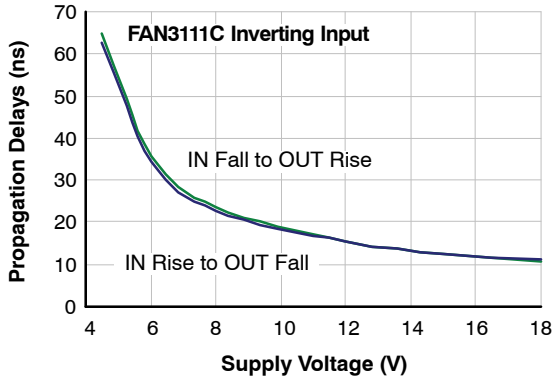

Figure 18. Propagation Delays vs. Supply Voltage

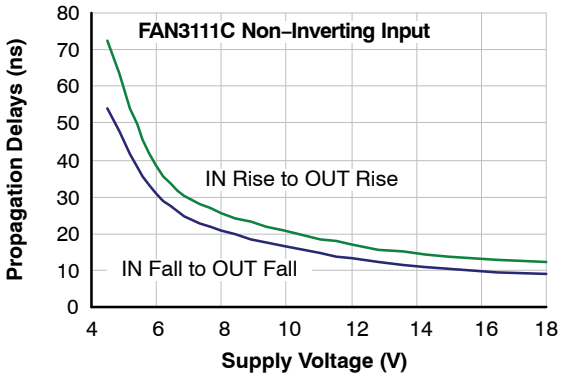

Figure 19. Propagation Delays vs. Supply Voltage

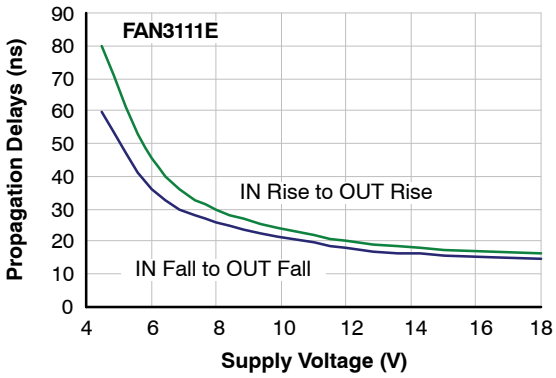

Figure 20. Propagation Delays vs. Supply Voltage

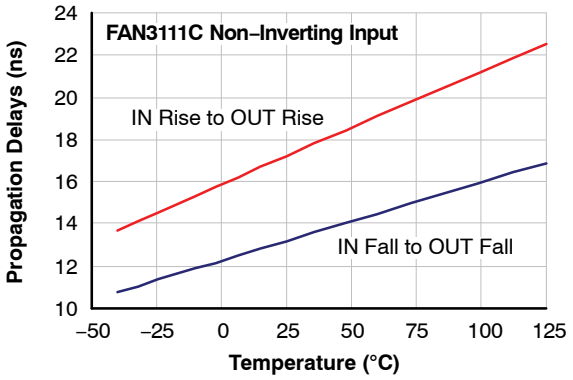

Figure 21. Propagation Delays vs. Temperature

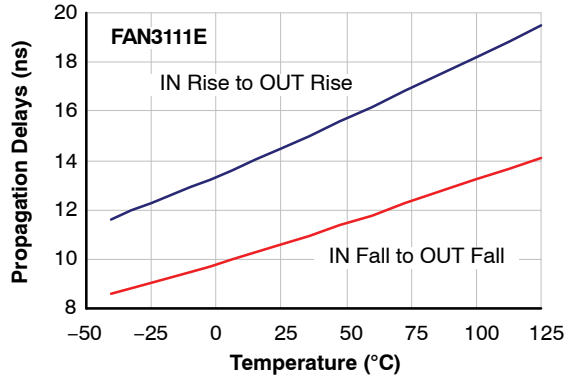

Figure 22. Propagation Delays vs. Temperature

TYPICAL PERFORMANCE CHARACTERISTICS (continued)

(Typical characteristics are provided at 25°C and V_{DD} = 12 V and V_{XREF} = 3.3 V unless otherwise noted)

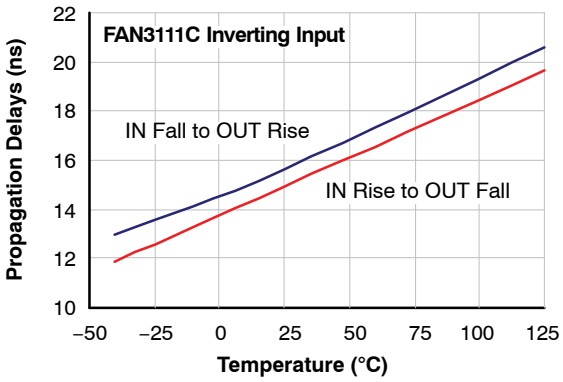

Figure 23. Propagation Delays vs. Temperature

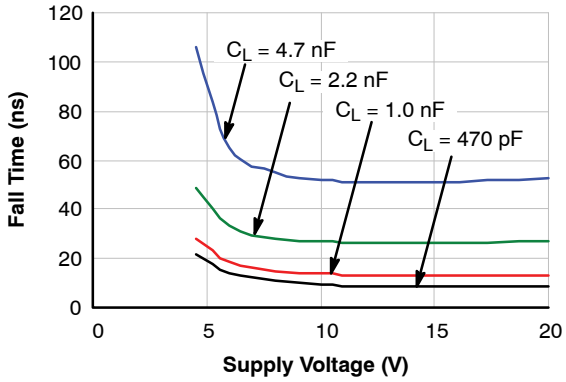

Figure 24. Fall Time vs. Supply Voltage

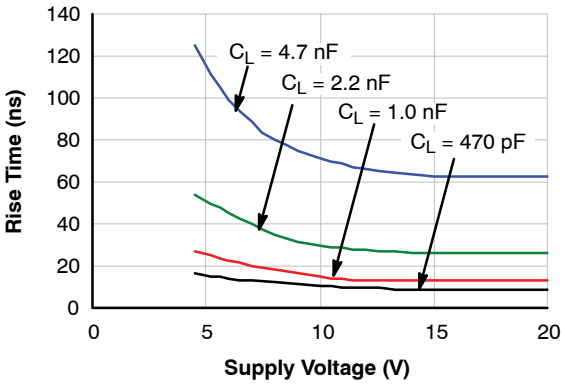

Figure 25. Rise Time vs. Supply Voltage

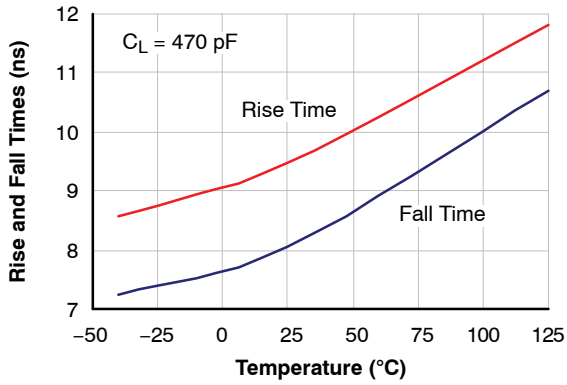

Figure 26. Rise and Fall Times vs. Temperature

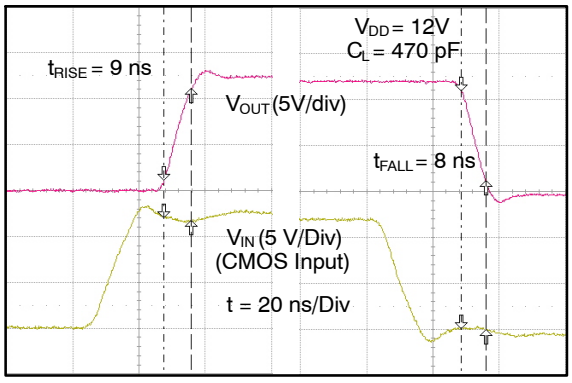

Figure 27. Rise and Fall Waveforms (470 pF)

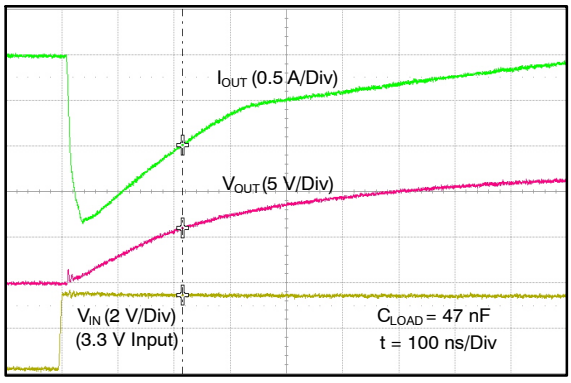

Figure 28. Quasi−Static Source Current (V_{DD} = 12 V)

TYPICAL PERFORMANCE CHARACTERISTICS (continued)

(Typical characteristics are provided at 25°C and V_{DD} = 12 V and V_{XREF} = 3.3 V unless otherwise noted)

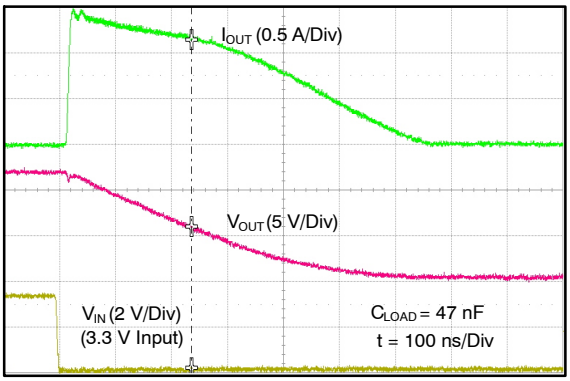

Figure 29. Quasi−Static Sink Current (V_{DD} = 12 V)

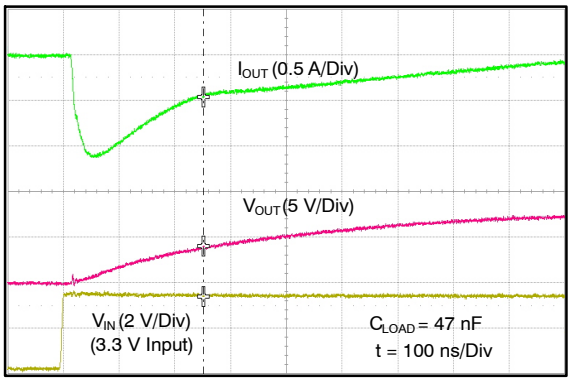

Figure 30. Quasi−Static Source Current (V_{DD} = 8 V)

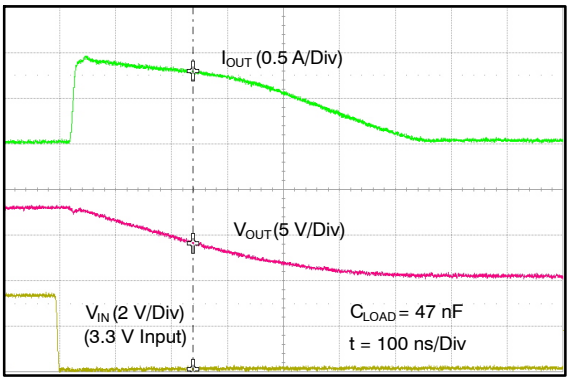

Figure 31. Quasi−Static Sink Current (V_{DD} = 8 V)

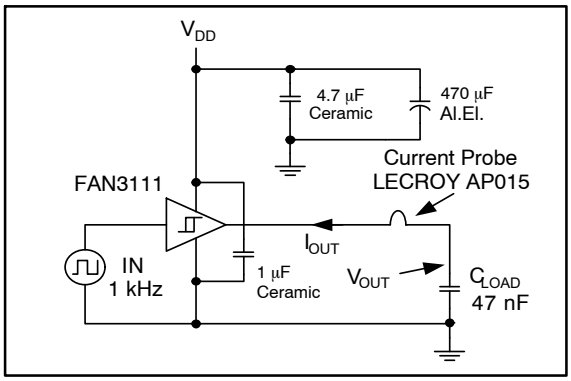

Figure 32. Quasi−Static I_{OUT}/V_{OUT} Test Circuit

APPLICATIONS INFORMATION

The FAN3111 offers CMOS− or logic−level−compatible input thresholds. In the FAN3111C, the logic input thresholds are dependent on the V_{DD} level and, with V_{DD} of 12 V, the logic rising−edge threshold is approximately 55% of V_{DD} and the input falling−edge threshold is approximately 38% of V_{DD}. The CMOS input configuration offers a hysteresis voltage of approximately 17% of V_{DD}. The CMOS inputs can be used with relatively slow edges (approaching DC) if good decoupling and bypass techniques are incorporated in the system design to prevent noise from violating the input−voltage hysteresis window. This allows setting precise timing intervals by fitting an R−C circuit between the controlling signal and the IN pin of the driver. The slow rising edge at the IN pin of the driver introduces a delay between the controlling signal and the OUT pin of the driver.

In the FAN3111E, the input thresholds are dependent on the VXREF voltage that typically is chosen between 2 V and 5 V. This range of V_{XREF} allows compatibility with TTL and other logic levels up to 5 V by connecting the XREF pin to the same source as the logic circuit that drives the FAN3111E input stage. The logic rising edge threshold is approximately 50% of V_{XREF} and the input falling−edge threshold is approximately 30% of V_{XREF}. The TTL−like input configuration offers a hysteresis voltage of approximately 20% of V_{XREF}.

Startup Operation

The FAN3111 internal logic is optimized to drive ground referenced N−channel MOSFETs as V_{DD} supply voltage rises during startup operation. As V_{DD} rises from 0 V to approximately 2 V, the OUT pin is held LOW by an internal resistor, regardless of the state of the input pins. When the internal circuitry becomes active at approximately 2 V, the output assumes the state commanded by the inputs.

Figure 33 illustrates FAN3111C startup operation with VDD increasing from 0 to 12 V, with the output commanded to the low level (IN+ and IN− tied to ground). Note that OUT is held LOW to maintain an N−channel MOSFET in the OFF state.

Figure 34 illustrates startup operation as V_{DD} increases from 0 to 12 V with the output commanded to the high level (IN+ tied to V_{DD}, IN− tied to GND). This configuration might not be suitable for driving high−side P−channel MOSFETs because the low output voltage of the driver would attempt to turn the P−channel MOSFET on with low V_{DD} levels.

Figure 35 illustrates FAN3111E startup operation with the output commanded to the low level (IN+ tied to ground) and the voltage on XREF ramped from 0 to 3.3 V.

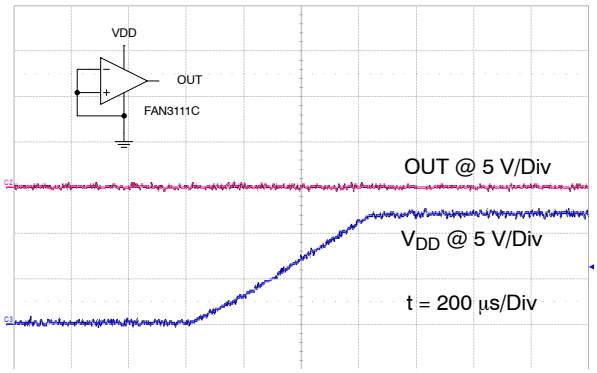

Figure 33. FAN3111C Startup Operation

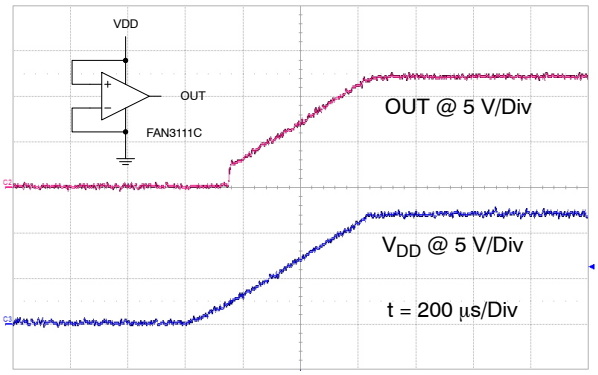

Figure 34. Startup Operation as V_{DD} Increases

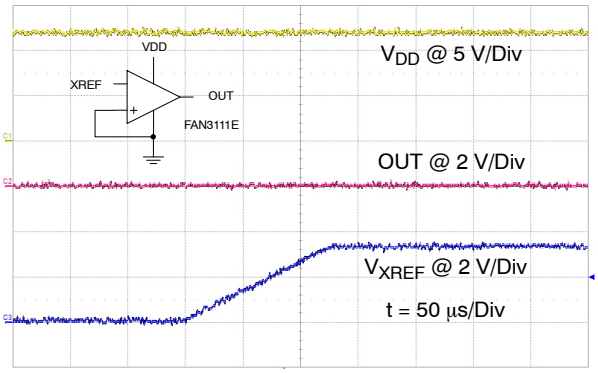

Figure 35. FAN3111E Startup Operation

MillerDrive™ Gate−Drive Technology

FAN3111 drivers incorporate the MillerDrive architecture shown in Figure 36 for the output stage, a combination of bipolar and MOS devices capable of providing large currents over a wide range of supply−voltage and temperature variations. The bipolar devices carry the bulk of the current as OUT swings between

1/3 to 2/3 V_{DD} and the MOS devices pull the output to the high or low rail.

The purpose of the MillerDrive architecture is to speed up switching by providing the highest current during the Miller plateau region when the gate−drain capacitance of the MOSFET is being charged or discharged as part of the turn−on/turn−off process. For applications with zero voltage switching during the MOSFET turn−on or turn−off interval, the driver supplies high peak current for fast switching even though the Miller plateau is not present. This situation often occurs in synchronous rectifier applications because the body diode is generally conducting before the MOSFET is switched on.

The output−pin slew rate is determined by V_{DD} voltage and the load on the output. It is not user adjustable, but if a slower rise or fall time at the MOSFET gate is needed, a series resistor can be added.

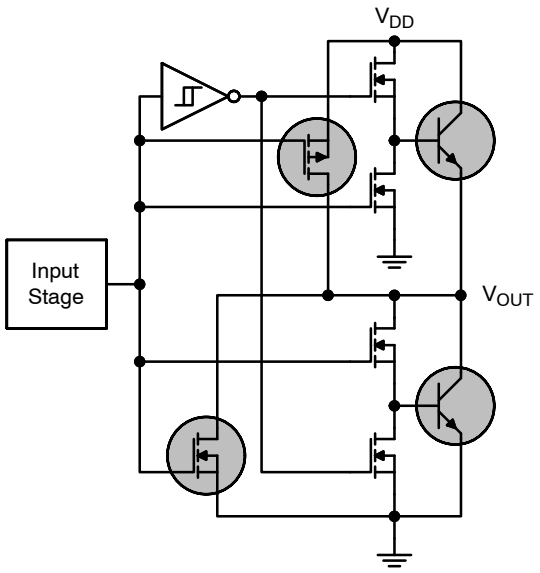

Figure 36. MillerDrive Output Architecture

V_{DD} Bypass Capacitor Guidelines

To enable this IC to turn a power device on quickly, a local, high−frequency, bypass capacitor C_{BYP} with low ESR and ESL should be connected between the V_{DD} and GND pins with minimal trace length. This capacitor is in addition to bulk electrolytic capacitance of 10 μF to 47 μF often found on driver and controller bias circuits.

A typical criterion for choosing the value of C_{BYP} is to keep the ripple voltage on the V_{DD} supply ±5%. Often this is achieved with a value ≥ 20 times the equivalent load capacitance C_{EQV}, defined here as Q_{gate}/V_{DD}. Ceramic capacitors of 0.1 μF to 1 μF or larger are common choices, as are dielectrics, such as X5R and X7R, which have good temperature characteristics and high pulse current capability.

If circuit noise affects normal operation, the value of CBYP may be increased to 50−100 times the C_{EQV} or C_{BYP} may be split into two capacitors. One should be a larger value, based on equivalent load capacitance, and the other a smaller value, such as 1−10 nF, mounted closest to the V_{DD} and GND pins to carry the higher−frequency components of the current pulses.

Layout and Connection Guidelines

The FAN3111 incorporates fast reacting input circuits, short propagation delays, and output stages capable of delivering current peaks over 1 A to facilitate voltage transition times from under 10 ns to over 100 ns. The following layout and connection guidelines are strongly recommended:

- Keep high−current output and power ground paths separate from logic input signals and signal ground paths. This is especially critical when dealing with TTL−level logic thresholds.
- Keep the driver as close to the load as possible to minimize the length of high−current traces. This reduces the series inductance to improve high−speed switching, while reducing the loop area that can radiate EMI to the driver inputs and other surrounding circuitry.
- Many high−speed power circuits can be susceptible to noise injected from their own output or other external sources, possibly causing output re−triggering. These effects can be especially obvious if the circuit is tested in breadboard or non−optimal circuit layouts with long input, enable, or output leads. For best results, make connections to all pins as short and direct as possible.
- The turn−on and turn−off current paths should be minimized as discussed in the following sections.

Figure 37 shows the pulsed gate−drive current path when the gate driver is supplying gate charge to turn the MOSFET on. The current is supplied from the local bypass capacitor, C_{BYP}, and flows through the driver to the MOSFET gate and to ground. To reach the high peak currents possible, the resistance and inductance in the path should be minimized. The localized C_{BYP} acts to contain the high peak−current pulses within this driver−MOSFET circuit, preventing them from disturbing the sensitive analog circuitry in the PWM controller.

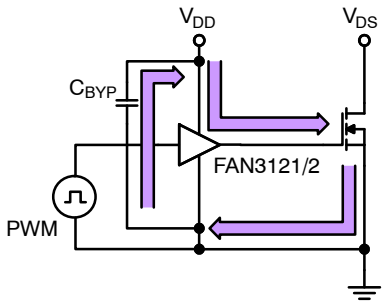

Figure 37. Current Path for MOSFET Turn−On

Figure 38 shows the current path when the gate driver turns the MOSFET off. Ideally, the driver shunts the current directly to the source of the MOSFET in a small circuit loop. For fast turn−off times, the resistance and inductance in this path should be minimized.

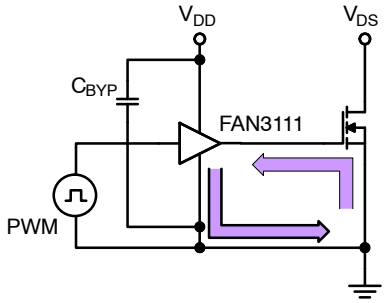

Figure 38. Current Path for MOSFET Turn−Off

Truth Table of Logic Operation

The FAN3111 truth table indicates the operational states using the dual−input configuration. In a non−inverting driver configuration, the IN− pin should be a logic low signal. If the IN− pin is connected to logic high, a disable function is realized, and the driver output remains low regardless of the state of the IN+ pin.

Table 1. FAN3111 TRUTH TABLE

IN+	IN−	OUT
0	0	0
0	1	0
1	0	1
1	1	0

In the non−inverting driver configuration in Figure 39, the IN− pin is tied to ground and the input signal (PWM) is applied to the IN+ pin. The IN− pin can be connected to logic high to disable the driver and the output remains low, regardless of the state of the IN+ pin.

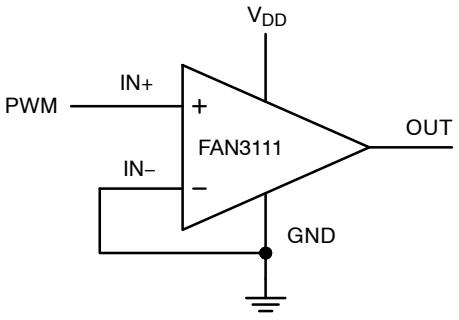

Figure 39. Dual−Input Driver Enabled, Non−Inverting Configuration

In the inverting driver application shown in Figure 40, the IN+ pin is tied high. Pulling the IN+ pin to GND forces the output low, regardless of the state of the IN− pin.

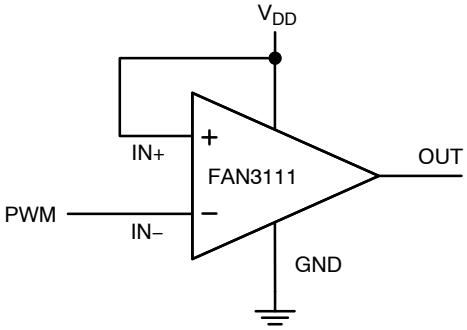

Figure 40. Dual−Input Driver Enabled, Inverting Configuration

Thermal Guidelines

Gate drivers used to switch MOSFETs and IGBTs at high frequencies can dissipate significant amounts of power. It is important to determine the driver power dissipation and the resulting junction temperature in the application to ensure that the part is operating within acceptable temperature limits.

The total power dissipation in a gate driver is the sum of three components; P_{GATE}, $P_{QUIESCENT}$, and $P_{DYNAMIC}$:

$$P_{TOTAL} = P_{GATE} + P_{DYNAMIC} \quad \text{(eq. 1)}$$

Gate Driving Loss: The most significant power loss results from supplying gate current (charge per unit time) to switch the load MOSFET on and off at the switching frequency. The power dissipation that results from driving a MOSFET at a specified gate−source voltage, V_{GS}, with gate charge, Q_G, at switching frequency, f_{SW}, is determined by:

$$P_{GATE} = Q_G \cdot V_{GS} \cdot f_{SW} \quad \text{(eq. 2)}$$

Dynamic Pre−drive/Shoot−through Current: A power loss resulting from internal current consumption under dynamic operating conditions, including pin pull−up/pull−down resistors, can be obtained using the graphs in Figure 9 and Figure 10 in Typical Performance Characteristics to determine the current $I_{DYNAMIC}$ drawn from V_{DD} under actual operating conditions:

$$P_{DYMANIC} = I_{DYNAMIC} \cdot V_{DD} \quad \text{(eq. 3)}$$

Once the power dissipated in the driver is determined, the driver junction temperature rise with respect to the device lead can be evaluated using thermal equation:

$$T_J = P_{TOTAL} \cdot \theta_{JB} + T_B \quad \text{(eq. 4)}$$

where:

T_J = driver junction temperature;

θ_{JL} = thermal resistance from junction to lead;

T_L = lead temperature of device in application.

The power dissipated in a gate−drive circuit is independent of the drive−circuit resistance and is split proportionately among the resistances present in the driver, any discrete series resistor present, and the gate resistance

internal to the power switching MOSFET. Power dissipated in the driver may be estimated using the following equation:

$$P_{PKG} = P_{TOTAL}\left(\frac{R_{OUT,DRIVER}}{R_{OUT,DRIVER} + R_{EXT} + R_{GATE,FET}}\right) \quad \text{(eq. 5)}$$

where:

P_{PKG} = power dissipated in the driver package;

$R_{OUT,DRIVER}$ = estimated driver impedance derived from I_{OUT} vs. V_{OUT} waveforms;

R_{EXT} = external series resistance connected between the driver output and the gate of the MOSFET; and

$R_{GATE,FET}$ = resistance internal to the load MOSFET gate and source connections.

TYPICAL APPLICATION DIAGRAMS

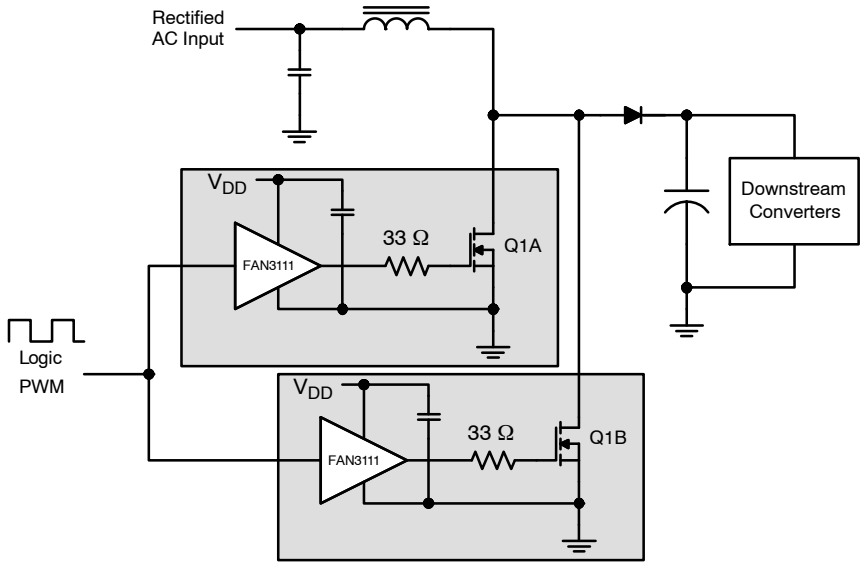

Figure 41. PFC Boost Circuit Utilizing Distributed Drivers for Parallel Power Switches Q1A and Q1B

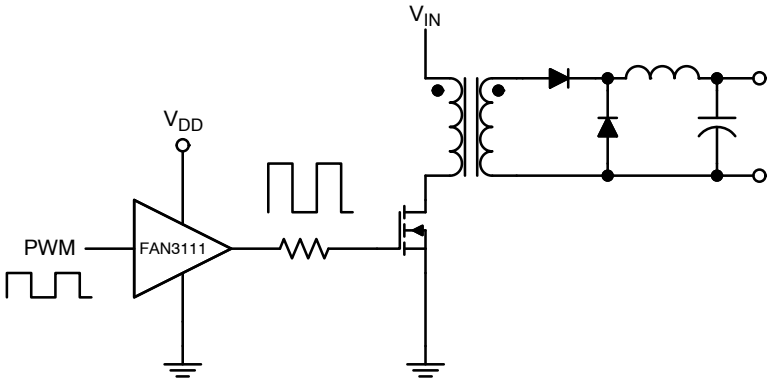

Figure 42. Driver for Forward Converter Low−Side Switch

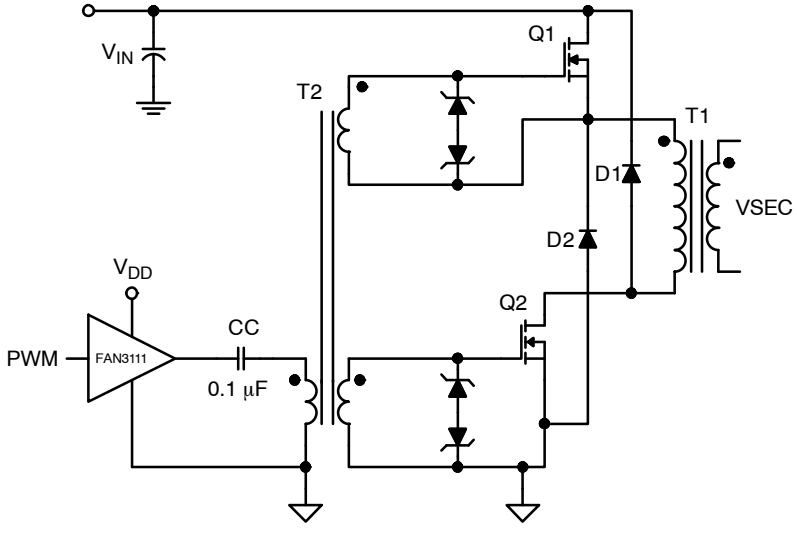

Figure 43. Driver for Two−Transistor, Forward−Converter Gate Transformer

ORDERING INFORMATION

Part Number	Input Threshold	Package	Shipping†
FAN3111CSX	CMOS	5−Pin SOT23	3,000 / Tape & Reel
FAN3111ESX	External	5−Pin SOT23	3,000 / Tape & Reel

†For information on tape and reel specifications, including part orientation and tape sizes, please refer to our Tape and Reel Packaging Specifications Brochure, BRD8011/D.

Table 2. RELATED PRODUCTS

Part Number	Type	Gate Drive (Note 10) (Sink/Src)	Input Threshold	Logic	Package
FAN3111C	**Single 1 A**	**+1.1 A/−0.9 A**	**CMOS**	**Single Channel of Dual−Input/Single−Output**	**SOT23−5**
FAN3111E	**Single 1 A**	**+1.1 A/−0.9 A**	**External (Note 11)**	**Single Non−Inverting Channel with External Reference**	**SOT23−5**
FAN3100C	Single 2 A	+2.5 A/−1.8 A	CMOS	Single Channel of Two−Input/One−Output	SOT23−5, MLP6
FAN3100T	Single 2 A	+2.5 A/−1.8 A	TTL	Single Channel of Two−Input/One−Output	SOT23−5, MLP6
FAN3226C	Dual 2 A	+2.4 A/−1.6 A	CMOS	Dual Inverting Channels + Dual Enable	SOIC8, MLP8
FAN3226T	Dual 2 A	+2.4 A/−1.6 A	TTL	Dual Inverting Channels + Dual Enable	SOIC8, MLP8
FAN3227C	Dual 2 A	+2.4 A/−1.6 A	CMOS	Dual Non−Inverting Channels + Dual Enable	SOIC8, MLP8
FAN3227T	Dual 2 A	+2.4 A/−1.6 A	TTL	Dual Non−Inverting Channels + Dual Enable	SOIC8, MLP8
FAN3228C	Dual 2 A	+2.4 A/−1.6 A	CMOS	Dual Channels of Two−Input/One−Output, Pin Config.1	SOIC8, MLP8
FAN3228T	Dual 2 A	+2.4 A/−1.6 A	TTL	Dual Channels of Two−Input/One−Output, Pin Config.1	SOIC8, MLP8
FAN3229C	Dual 2 A	+2.4 A/−1.6 A	CMOS	Dual Channels of Two−Input/One−Output, Pin Config.2	SOIC8, MLP8
FAN3229T	Dual 2 A	+2.4 A/−1.6 A	TTL	Dual Channels of Two−Input/One−Output, Pin Config.2	SOIC8, MLP8
FAN3268T	Dual 2 A	+2.4 A/−1.6 A	TTL	18 V Half−Bridge Driver: Non−Inverting Channel (NMOS) and Inverting Channel (PMOS) + Dual Enables	SOIC8
FAN3223C	Dual 4 A	+4.3 A/−2.8 A	CMOS	Dual Inverting Channels + Dual Enable	SOIC8, MLP8
FAN3223T	Dual 4 A	+4.3 A/−2.8 A	TTL	Dual Inverting Channels + Dual Enable	SOIC8, MLP8
FAN3224C	Dual 4 A	+4.3 A/−2.8 A	CMOS	Dual Non−Inverting Channels + Dual Enable	SOIC8, MLP8
FAN3224T	Dual 4 A	+4.3 A/−2.8 A	TTL	Dual Non−Inverting Channels + Dual Enable	SOIC8, MLP8
FAN3225C	Dual 4 A	+4.3 A/−2.8 A	CMOS	Dual Channels of Two−Input/One−Output	SOIC8, MLP8
FAN3225T	Dual 4 A	+4.3 A/−2.8 A	TTL	Dual Channels of Two−Input/One−Output	SOIC8, MLP8
FAN3121C	Single 9 A	+9.7 A/−7.1 A	CMOS	Single Inverting Channel + Enable	SOIC8, MLP8
FAN3121T	Single 9 A	+9.7 A/−7.1 A	TTL	Single Inverting Channel + Enable	SOIC8, MLP8
FAN3122T	Single 9 A	+9.7 A/−7.1 A	CMOS	Single Non−Inverting Channel + Enable	SOIC8, MLP8
FAN3122C	Single 9 A	+9.7 A/−7.1 A	TTL	Single Non−Inverting Channel + Enable	SOIC8, MLP8

10. Typical currents with OUT at 6 V and V_{DD} = 12 V.
11. Thresholds proportional to an externally supplied reference voltage.

MillerDrive is a trademark of Semiconductor Components Industries, LLC dba “**onsemi**” or its affiliates and/or subsidiaries in the United States and/or other countries.

MECHANICAL CASE OUTLINE
PACKAGE DIMENSIONS

ON Semiconductor®

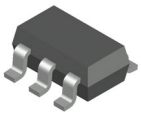

SOT−23, 5 Lead
CASE 527AH
ISSUE A

DATE 09 JUN 2021

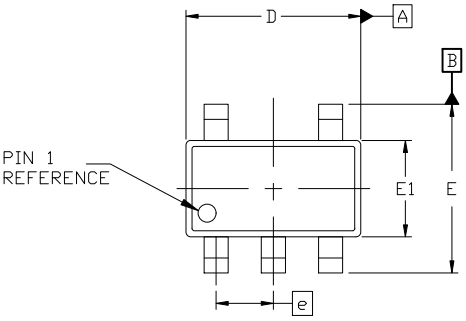

TOP VIEW

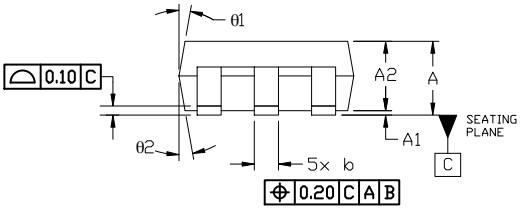

SIDE VIEW

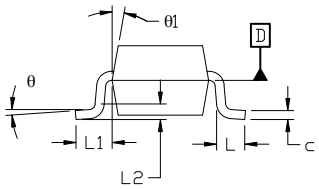

END VIEW

NOTES:
1. DIMENSIONING AND TOLERANCING PER ASME Y14.5M, 19894
2. CONTROLLING DIMENSION: MILLIMETERS
3. MAXIMUM LEAD THICKNESS INCLUDES LEAD FINISH THICKNESS. MINIMUM LEAD THICKNESS IS THE MINIMUM THICKNESS OF THE BASE MATERIAL.
4. DIMENSIONS D AND E1 DO NOT INCLUDE MOLD FLASH, PROTRUSIONS, OR GATE BURRS. MOLD FLASH, PROTRUSIONS, OR GATE BURRS SHALL NOT EXCEED 0.25 PER SIDE. D AND E1 DIMENSIONS ARE DETERMINED AT DATUM D.
5. DIMENSION 'b' DOES NOT INCLUDE DAMBAR PROTRUSION. ALLOWABLE DAMBAR PROTRUSION SHALL BE 0.08mm TOTAL IN EXCESS OF THE 'b' DIMENSION AT MAXIMUM MATERIAL CONDITION. MINIMUM SPACE BETWEEN PROTRUSION AND AN ADJACENT LEAD SHALL NOT BE LESS THAN 0.07mm.

	MILLIMETERS		
DIM	MIN.	NOM.	MAX.
A	0.90	—	1.45
A1	0.00	—	0.15
A2	0.90	1.15	1.30
b	0.30	—	0.50
c	0.08	—	0.22
D	2.90 BSC		
E	2.80 BSC		
E1	1.60 BSC		
e	0.95 BSC		
L	0.30	0.45	0.60
L1	0.60 REF		
L2	0.25 REF		
θ	0°	4°	8°
θ1	0°	10°	15°
θ2	0°	10°	15°

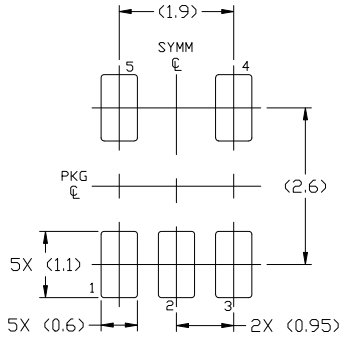

RECOMMENDED MOUNTING FOOTPRINT

For additional information on our Pb-Free strategy and soldering details, please download the ON Semiconductor Soldering and Mounting Techniques Reference Manual, SOLDERRM/D.

GENERIC MARKING DIAGRAM*

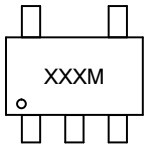

XXX = Specific Device Code
M = Date Code

*This information is generic. Please refer to device data sheet for actual part marking. Pb−Free indicator, "G" or microdot "▪", may or may not be present. Some products may not follow the Generic Marking.

DOCUMENT NUMBER:	**98AON34320E**	Electronic versions are uncontrolled except when accessed directly from the Document Repository. Printed versions are uncontrolled except when stamped "CONTROLLED COPY" in red.
DESCRIPTION:	**SOT−23, 5 LEAD**	**PAGE 1 OF 1**

ON Semiconductor and ON are trademarks of Semiconductor Components Industries, LLC dba ON Semiconductor or its subsidiaries in the United States and/or other countries. ON Semiconductor reserves the right to make changes without further notice to any products herein. ON Semiconductor makes no warranty, representation or guarantee regarding the suitability of its products for any particular purpose, nor does ON Semiconductor assume any liability arising out of the application or use of any product or circuit, and specifically disclaims any and all liability, including without limitation special, consequential or incidental damages. ON Semiconductor does not convey any license under its patent rights nor the rights of others.

© Semiconductor Components Industries, LLC, 2019

onsemi, , and other names, marks, and brands are registered and/or common law trademarks of Semiconductor Components Industries, LLC dba "**onsemi**" or its affiliates and/or subsidiaries in the United States and/or other countries. **onsemi** owns the rights to a number of patents, trademarks, copyrights, trade secrets, and other intellectual property. A listing of **onsemi**'s product/patent coverage may be accessed at www.onsemi.com/site/pdf/Patent−Marking.pdf. **onsemi** reserves the right to make changes at any time to any products or information herein, without notice. The information herein is provided "as−is" and **onsemi** makes no warranty, representation or guarantee regarding the accuracy of the information, product features, availability, functionality, or suitability of its products for any particular purpose, nor does **onsemi** assume any liability arising out of the application or use of any product or circuit, and specifically disclaims any and all liability, including without limitation special, consequential or incidental damages. Buyer is responsible for its products and applications using **onsemi** products, including compliance with all laws, regulations and safety requirements or standards, regardless of any support or applications information provided by **onsemi**. "Typical" parameters which may be provided in **onsemi** data sheets and/or specifications can and do vary in different applications and actual performance may vary over time. All operating parameters, including "Typicals" must be validated for each customer application by customer's technical experts. **onsemi** does not convey any license under any of its intellectual property rights nor the rights of others. **onsemi** products are not designed, intended, or authorized for use as a critical component in life support systems or any FDA Class 3 medical devices or medical devices with a same or similar classification in a foreign jurisdiction or any devices intended for implantation in the human body. Should Buyer purchase or use **onsemi** products for any such unintended or unauthorized application, Buyer shall indemnify and hold **onsemi** and its officers, employees, subsidiaries, affiliates, and distributors harmless against all claims, costs, damages, and expenses, and reasonable attorney fees arising out of, directly or indirectly, any claim of personal injury or death associated with such unintended or unauthorized use, even if such claim alleges that **onsemi** was negligent regarding the design or manufacture of the part. **onsemi** is an Equal Opportunity/Affirmative Action Employer. This literature is subject to all applicable copyright laws and is not for resale in any manner.

ADDITIONAL INFORMATION

TECHNICAL PUBLICATIONS:
Technical Library: www.onsemi.com/design/resources/technical−documentation
onsemi Website: www.onsemi.com

ONLINE SUPPORT: www.onsemi.com/support
For additional information, please contact your local Sales Representative at www.onsemi.com/support/sales