Thank you for your interest in **onsemi** products.

Your technical document begins on the following pages.

Your Feedback is Important to Us!

Please take a moment to participate in our short survey.
At **onsemi**, we are dedicated to delivering technical content that best meets your needs.

Help Us Improve – Take the Survey

This survey is intended to collect your feedback, capture any issues you may encounter, and to provide improvements you would like to suggest.

We look forward to your feedback.

To learn more about **onsemi**, please visit our website at
www.onsemi.com

onsemi and onsemi and other names, marks, and brands are registered and/or common law trademarks of Semiconductor Components Industries, LLC dba "**onsemi**" or its affiliates and/or subsidiaries in the United States and/or other countries. **onsemi** owns the rights to a number of patents, trademarks, copyrights, trade secrets, and other intellectual property. A listing of **onsemi** product/patent coverage may be accessed at www.onsemi.com/site/pdf/Patent-Marking.pdf. **onsemi** reserves the right to make changes at any time to any products or information herein, without notice. The information herein is provided "as-is" and **onsemi** makes no warranty, representation or guarantee regarding the accuracy of the information, product features, availability, functionality, or suitability of its products for any particular purpose, nor does **onsemi** assume any liability arising out of the application or use of any product or circuit, and specifically disclaims any and all liability, including without limitation special, consequential or incidental damages. Buyer is responsible for its products and applications using **onsemi** products, including compliance with all laws, regulations and safety requirements or standards, regardless of any support or applications information provided by **onsemi**. "Typical" parameters which may be provided in **onsemi** data sheets and/or specifications can and do vary in different applications and actual performance may vary over time. All operating parameters, including "Typicals" must be validated for each customer application by customer's technical experts. **onsemi** does not convey any license under any of its intellectual property rights nor the rights of others. **onsemi** products are not designed, intended, or authorized for use as a critical component in life support systems or any FDA Class 3 medical devices or medical devices with a same or similar classification in a foreign jurisdiction or any devices intended for implantation in the human body. Should Buyer purchase or use **onsemi** products for any such unintended or unauthorized application, Buyer shall indemnify and hold **onsemi** and its officers, employees, subsidiaries, affiliates, and distributors harmless against all claims, costs, damages, and expenses, and reasonable attorney fees arising out of, directly or indirectly, any claim of personal injury or death associated with such unintended or unauthorized use, even if such claim alleges that **onsemi** was negligent regarding the design or manufacture of the part. **onsemi** is an Equal Opportunity/Affirmative Action Employer. This literature is subject to all applicable copyright laws and is not for resale in any manner. Other names and brands may be claimed as the property of others.

MOSFET – N-Channel, UniFET™

500 V, 28 A, 155 mΩ

FDA28N50

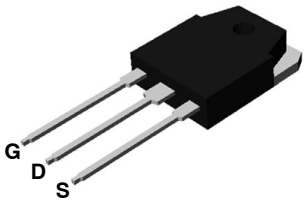

TO−3P−3L
CASE 340BZ

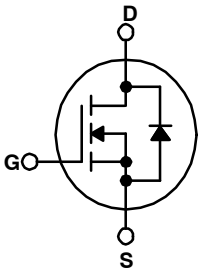

Description

UniFET MOSFET is **onsemi**'s high voltage MOSFET family based on planar stripe and DMOS technology. This MOSFET is tailored to reduce on−state resistance, and to provide better switching performance and higher avalanche energy strength. This device family is suitable for switching power converter applications such as power factor correction (PFC), flat panel display (FPD) TV power, ATX and electronic lamp ballasts.

Features

- $R_{DS(on)}$ = 122 mΩ (Typ.) @ V_{GS} = 10 V, I_D = 14 A
- Low Gate Charge (Typ. 80 nC)
- Low Crss (Typ. 42 pF)
- 100% Avalanche Tested
- This Device is Pb−Free Halide, Free and RoHS Compliant

Applications

- PDP TV
- Uninterruptible Power Supply
- AC−DC Power Supply

MOSFET MAXIMUM RATINGS (T_C = 25°C unless otherwise noted.)

Symbol	Parameter	Value	Unit
V_{DSS}	Drain to Source Voltage	500	V
V_{GSS}	Gate to Source Voltage	±30	V
I_D	Drain Current – Continuous (T_C = 25°C) – Continuous (T_C = 100°C)	 28 17	A
I_{DM}	Drain Current – Pulsed (Note 1)	112	A
E_{AS}	Single Pulsed Avalanche Energy (Note 2)	2391	mJ
I_{AR}	Avalanche Current (Note 1)	28	A
E_{AR}	Repetitive Avalanche Energy (Note 1)	31	mJ
dv/dt	Peak Diode Recovery dv/dt (Note 3)	5	V/ns
P_D	Power Dissipation – (T_C = 25°C) – Derate Above 25°C	 310 2.5	 W W/°C
T_J,T_{STG}	Operating and Storage Temperature Range	−55 to +175	°C
T_L	Maximum Lead Temperature for Soldering Purposes, 1/8" from case for 5 seconds	300	°C

Stresses exceeding those listed in the Maximum Ratings table may damage the device. If any of these limits are exceeded, device functionality should not be assumed, damage may occur and reliability may be affected.

MARKING DIAGRAM

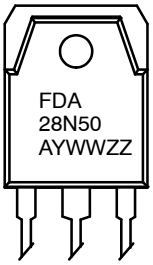

FDA28N50	= Specific Device Code
A	= Assembly Location
YWW	= Date Code (Year and Week)
ZZ	= Assembly Lot Code

ORDERING INFORMATION

Device	Package	Shipping†
FDA28N50	TO−3P−3L (Pb−Free)	450 Units / Tube

†For information on tape and reel specifications, including part orientation and tape sizes, please refer to our Tape and Reel Packaging Specifications Brochure, BRD8011/D.

© Semiconductor Components Industries, LLC, 2006

THERMAL CHARACTERISTICS

Symbol	Parameter	Value	Unit
$R_{\theta JC}$	Thermal Resistance, Junction to Case, Max	0.4	°C/W
$R_{\theta JA}$	Thermal Resistance, Junction to Ambient, Max.	40	

ELECTRICAL CHARACTERISTICS (T_C = 25°C unless otherwise noted)

Symbol	Parameter	Test Conditions	Min	Typ	Max	Unit
Off Characteristics						
BV_{DSS}	Drain−Source Breakdown Voltage	I_D = 250 μA, V_{GS} = 0 V, T_J = 25°C	500	–	–	V
$\frac{\Delta BV_{DSS}}{\Delta T_J}$	Breakdown Voltage Temperature Coefficient	I_D = 250 μA, Referenced to 25°C	–	0.59	–	V/°C
I_{DSS}	Zero Gate Voltage Drain Current	V_{DS} = 500 V, V_{GS} = 0 V	–	–	1	μA
		V_{DS} = 400 V, T_C = 125°C	–	–	10	
I_{GSS}	Gate to Body Leakage Current	V_{GS} = ±30 V, V_{DS} = 0 V	–	–	±100	nA
On Characteristics						
$V_{GS(th)}$	Gate Threshold Voltage	V_{GS} = V_{DS}, I_D = 250 μA	3.0	–	5.0	V
$R_{DS(on)}$	Static Drain to Source On Resistance	V_{GS} = 10 V, I_D = 14 A	–	0.122	0.155	Ω
g_{FS}	Forward Transconductance	V_{DS} = 20 V, I_D = 14 A	–	34	–	S
Dynamic Characteristics						
C_{iss}	Input Capacitance	V_{DS} = 25 V, V_{GS} = 0 V, f = 1 MHz	–	3866	5140	pF
C_{oss}	Output Capacitance		–	576	766	pF
C_{rss}	Reverse Transfer Capacitance		–	42	63	pF
$Q_{g(tot)}$	Total Gate Charge at 10 V	V_{DS} = 400 V, I_D = 28 A, V_{GS} = 10 V (Note 4)	–	80	105	nC
Q_{gs}	Gate to Source Gate Charge		–	21	–	nC
Q_{gd}	Gate to Drain “Miller” Charge		–	32	–	nC
Switching Characteristics						
$t_{d(on)}$	Turn−On Delay Time	V_{DD} = 250 V, I_D = 28 A, V_{GS} = 10 V R_G = 25 Ω (Note 4)	–	56	122	ns
t_r	Turn−On Rise Time		–	126	262	ns
$t_{d(off)}$	Turn−Off Delay Time		–	210	430	ns
t_f	Turn−Off Fall Time		–	110	230	ns
Drain−Source Diode Characteristics and Maximum Ratings						
I_S	Maximum Continuous Drain to Source Diode Forward Current		–	–	28	A
I_{SM}	Maximum Pulsed Drain to Source Diode Forward Current		–	–	112	A
V_{SD}	Drain−Source Diode Forward Voltage	V_{GS} = 0 V, I_{SD} = 20 A	–	–	1.4	V
t_{rr}	Reverse Recovery Time	V_{GS} = 0 V, I_{SD} = 20 A, dI_F/dt = 100 A/μs	–	530	–	ns
Q_{rr}	Reverse Recovery Charge		–	8	–	μC

Product parametric performance is indicated in the Electrical Characteristics for the listed test conditions, unless otherwise noted. Product performance may not be indicated by the Electrical Characteristics if operated under different conditions.

NOTES:
1. Repetitive Rating: Pulse−width limited by maximum junction temperature.
2. L = 6.1 mH, I_{AS} = 28 A, V_{DD} = 50 V, R_G = 25 Ω, starting T_J = 25°C.
3. I_{SD} ≤ 28 A, di/dt ≤ 200 A/μs, V_{DD} ≤ BV_{DSS}, starting T_J = 25°C.
4. Essentially independent of operating temperature typical Characteristics.

TYPICAL CHARACTERISTICS

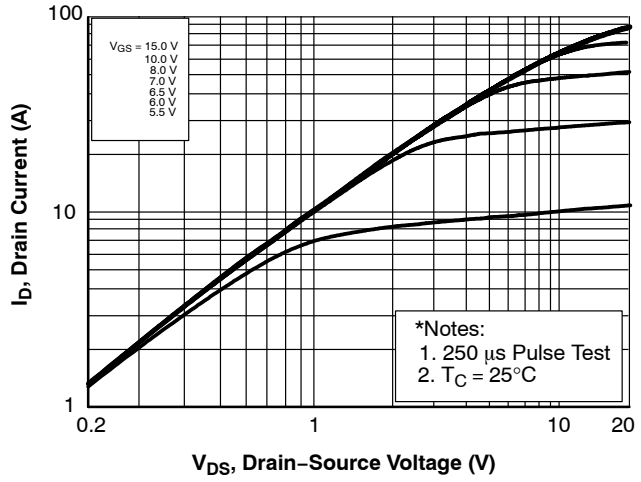

Figure 1. On−Region Characteristics

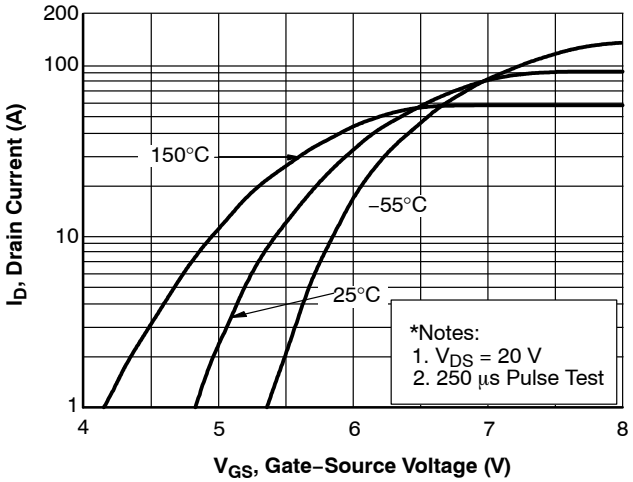

Figure 2. Transfer Characteristics

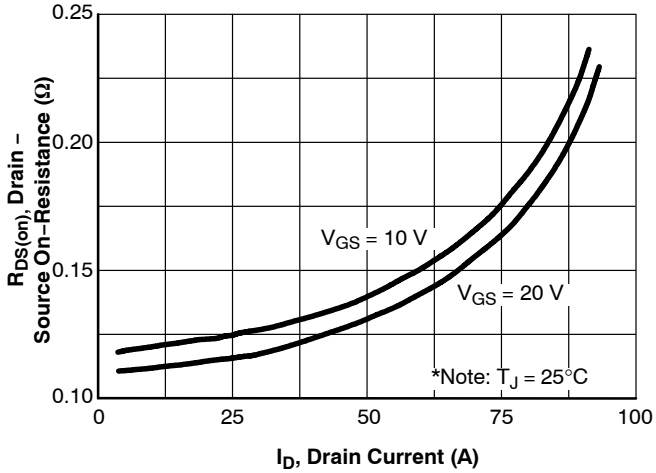

Figure 3. On−Resistance Variation vs Drain Current and Gate Voltage

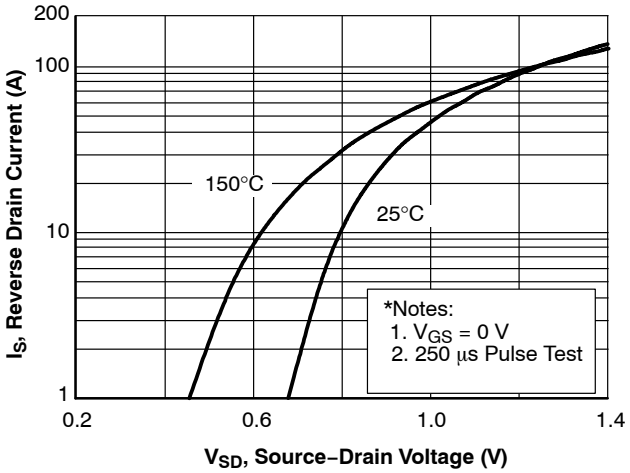

Figure 4. Body Diode Forward Voltage Variation vs Source Current and Temperature

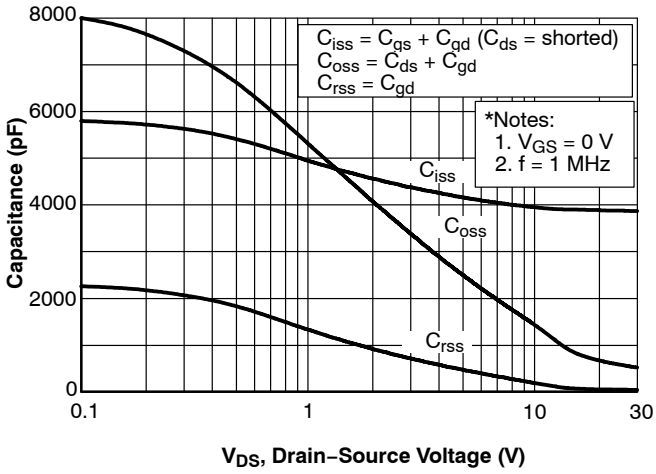

Figure 5. Capacitance Characteristics

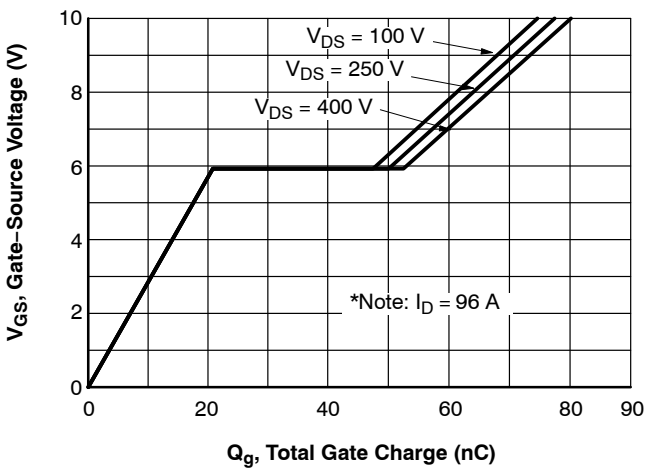

Figure 6. Gate Charge Characteristics

TYPICAL CHARACTERISTICS (CONTINUED)

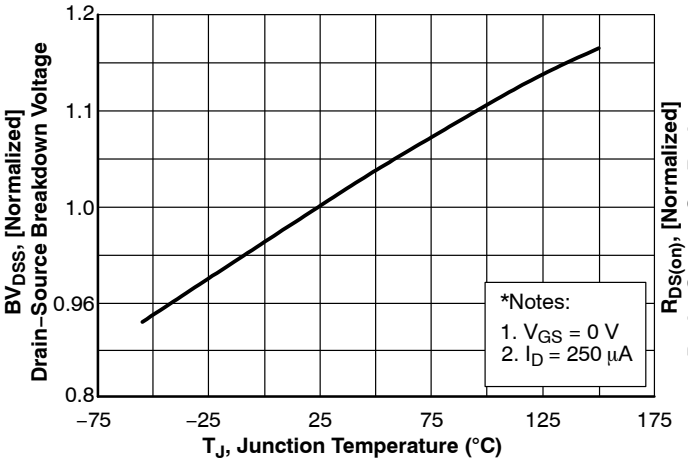

Figure 7. Breakdown Voltage Variation vs Temperature

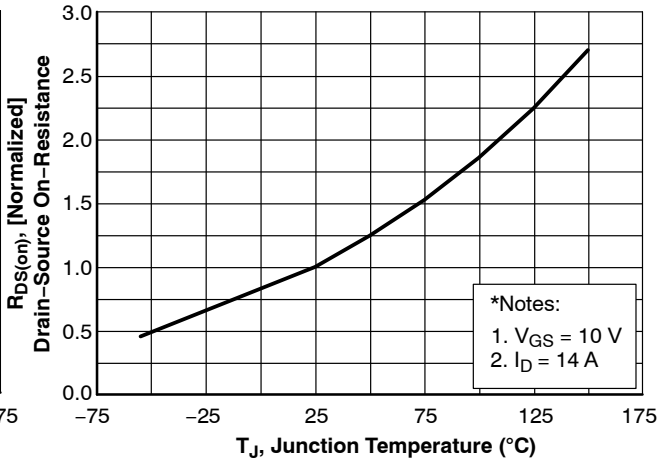

Figure 8. On−Resistance Variation vs Temperature

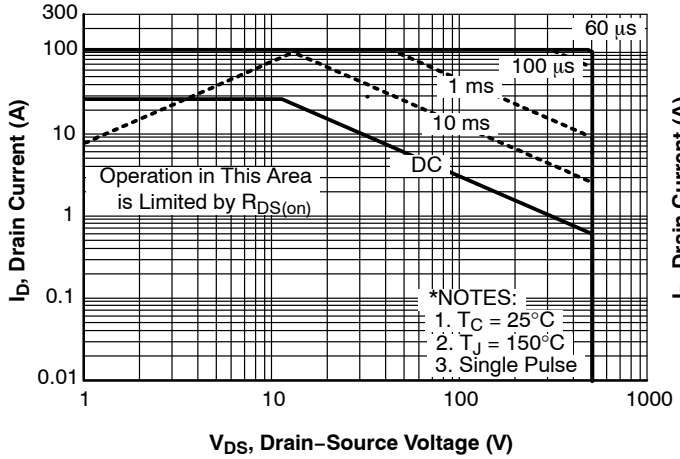

Figure 9. Maximum Safe Operating Area

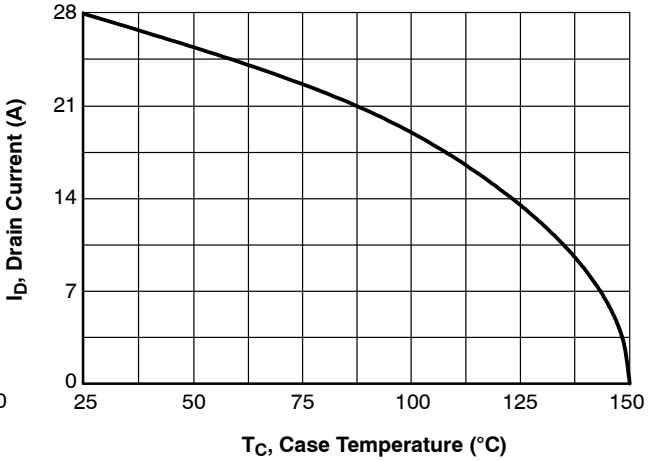

Figure 10. Maximum Drain Current vs. Case Temperature

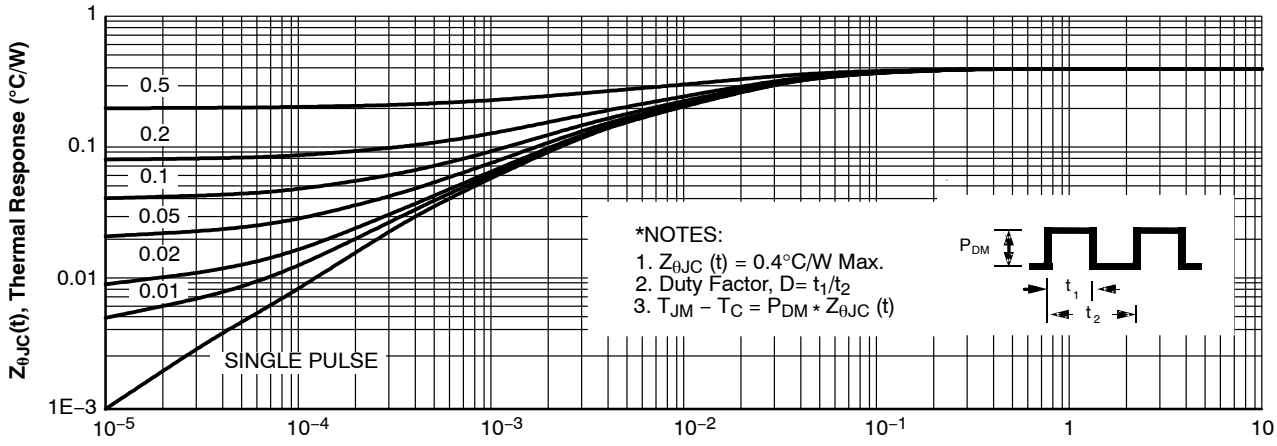

Figure 11. Transient Thermal Response Curve

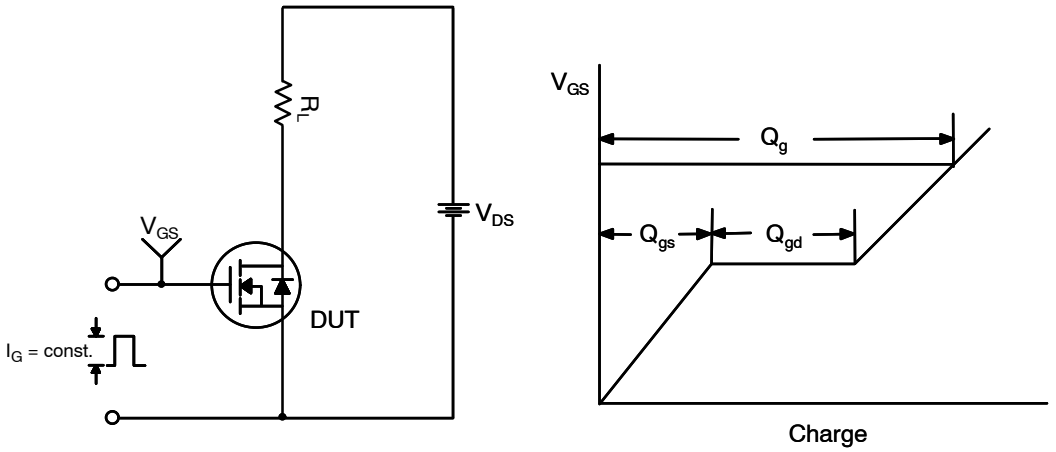

Figure 12. Gate Charge Test Circuit & Waveform

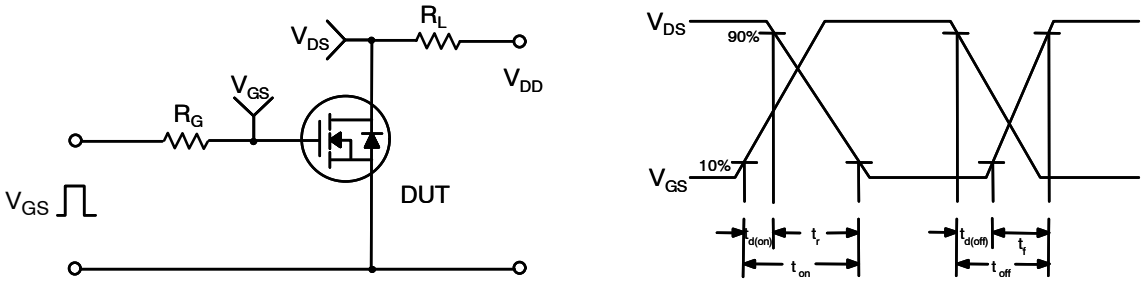

Figure 13. Resistive Switching Test Circuit & Waveforms

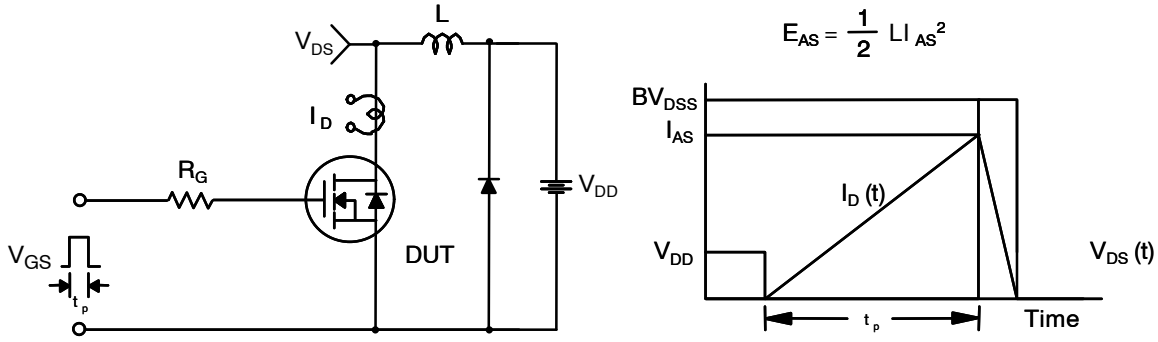

Figure 14. Unclamped Inductive Switching Test Circuit & Waveforms

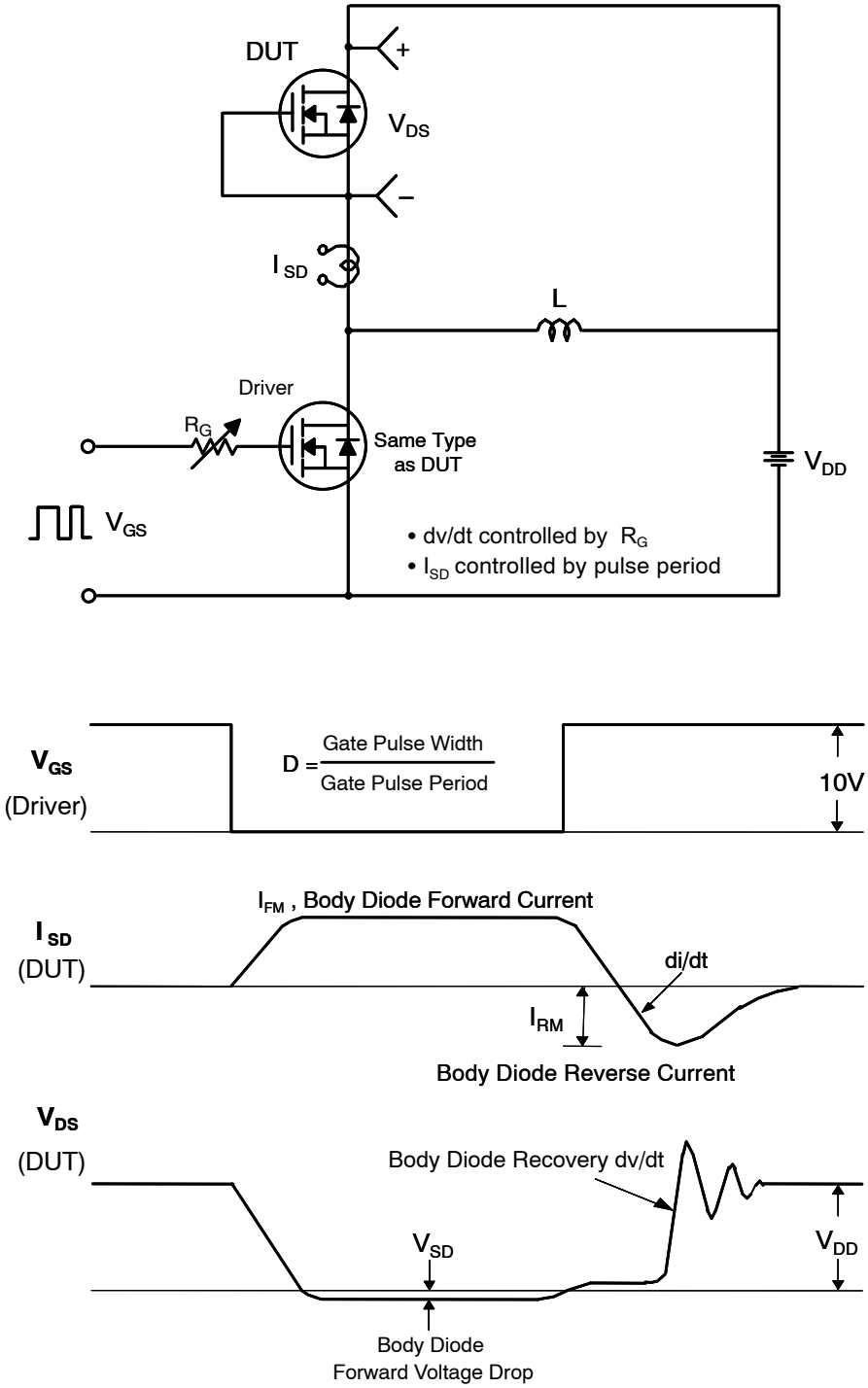

Figure 15. Peak Diode Recovery dv/dt Test Circuit & Waveforms

UniFET is a trademark of Semiconductor Components Industries, LLC dba “**onsemi**” or its affiliates and/or subsidiaries in the United States and/or other countries.

TO−3P−3LD / EIAJ SC−65, ISOLATED
CASE 340BZ
ISSUE O

DATE 31 OCT 2016

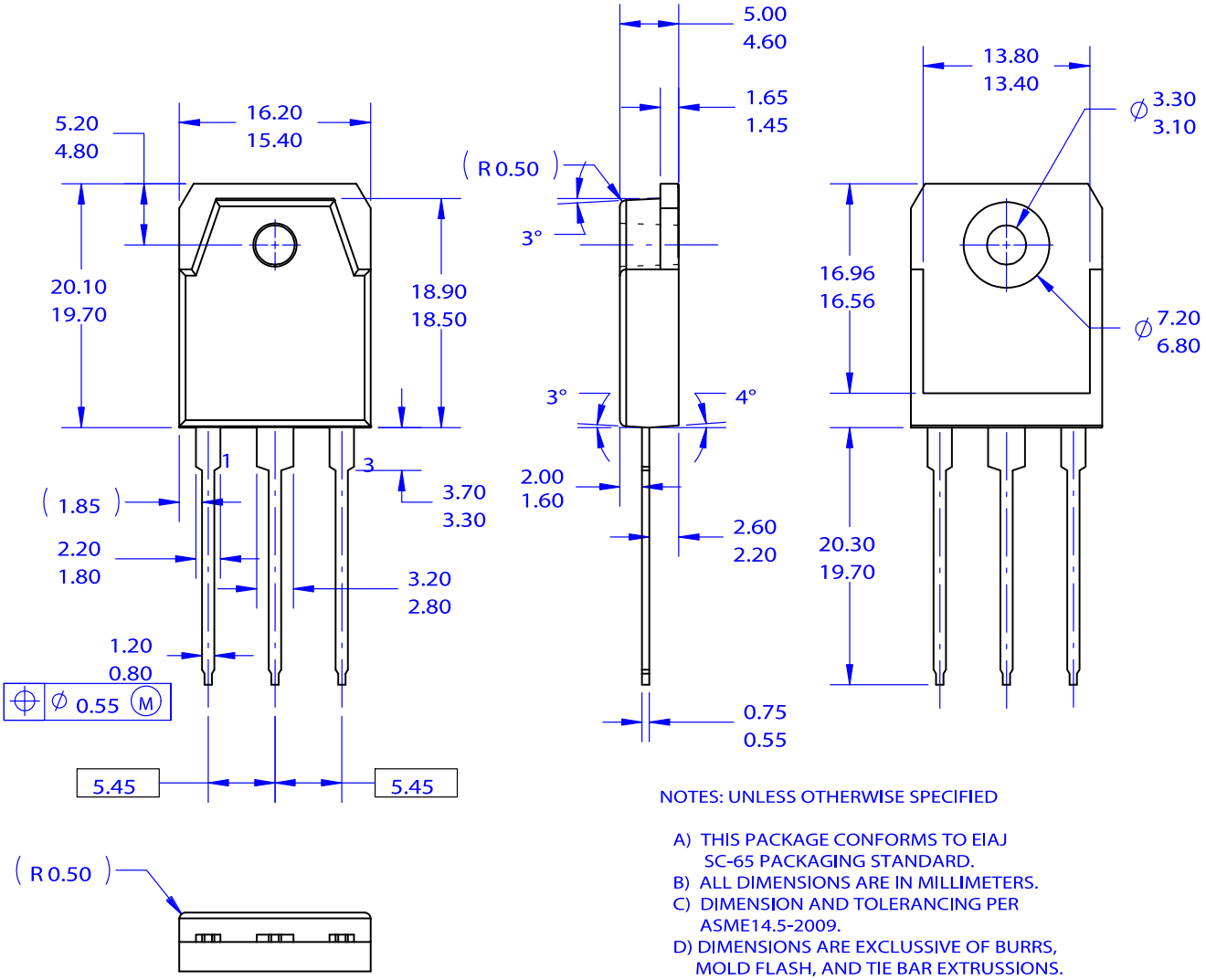

NOTES: UNLESS OTHERWISE SPECIFIED

A) THIS PACKAGE CONFORMS TO EIAJ SC-65 PACKAGING STANDARD.
B) ALL DIMENSIONS ARE IN MILLIMETERS.
C) DIMENSION AND TOLERANCING PER ASME14.5-2009.
D) DIMENSIONS ARE EXCLUSSIVE OF BURRS, MOLD FLASH, AND TIE BAR EXTRUSSIONS.

DOCUMENT NUMBER:	**98AON13862G**	Electronic versions are uncontrolled except when accessed directly from the Document Repository. Printed versions are uncontrolled except when stamped "CONTROLLED COPY" in red.
DESCRIPTION:	**TO−3P−3LD / EIAJ SC−65, ISOLATED**	**PAGE 1 OF 1**

ON Semiconductor and ON are trademarks of Semiconductor Components Industries, LLC dba ON Semiconductor or its subsidiaries in the United States and/or other countries. ON Semiconductor reserves the right to make changes without further notice to any products herein. ON Semiconductor makes no warranty, representation or guarantee regarding the suitability of its products for any particular purpose, nor does ON Semiconductor assume any liability arising out of the application or use of any product or circuit, and specifically disclaims any and all liability, including without limitation special, consequential or incidental damages. ON Semiconductor does not convey any license under its patent rights nor the rights of others.

© Semiconductor Components Industries, LLC, 2019

onsemi, , and other names, marks, and brands are registered and/or common law trademarks of Semiconductor Components Industries, LLC dba "**onsemi**" or its affiliates and/or subsidiaries in the United States and/or other countries. **onsemi** owns the rights to a number of patents, trademarks, copyrights, trade secrets, and other intellectual property. A listing of **onsemi**'s product/patent coverage may be accessed at www.onsemi.com/site/pdf/Patent−Marking.pdf. **onsemi** reserves the right to make changes at any time to any products or information herein, without notice. The information herein is provided "as−is" and **onsemi** makes no warranty, representation or guarantee regarding the accuracy of the information, product features, availability, functionality, or suitability of its products for any particular purpose, nor does **onsemi** assume any liability arising out of the application or use of any product or circuit, and specifically disclaims any and all liability, including without limitation special, consequential or incidental damages. Buyer is responsible for its products and applications using **onsemi** products, including compliance with all laws, regulations and safety requirements or standards, regardless of any support or applications information provided by **onsemi**. "Typical" parameters which may be provided in **onsemi** data sheets and/or specifications can and do vary in different applications and actual performance may vary over time. All operating parameters, including "Typicals" must be validated for each customer application by customer's technical experts. **onsemi** does not convey any license under any of its intellectual property rights nor the rights of others. **onsemi** products are not designed, intended, or authorized for use as a critical component in life support systems or any FDA Class 3 medical devices or medical devices with a same or similar classification in a foreign jurisdiction or any devices intended for implantation in the human body. Should Buyer purchase or use **onsemi** products for any such unintended or unauthorized application, Buyer shall indemnify and hold **onsemi** and its officers, employees, subsidiaries, affiliates, and distributors harmless against all claims, costs, damages, and expenses, and reasonable attorney fees arising out of, directly or indirectly, any claim of personal injury or death associated with such unintended or unauthorized use, even if such claim alleges that **onsemi** was negligent regarding the design or manufacture of the part. **onsemi** is an Equal Opportunity/Affirmative Action Employer. This literature is subject to all applicable copyright laws and is not for resale in any manner.

ADDITIONAL INFORMATION

TECHNICAL PUBLICATIONS:
Technical Library: www.onsemi.com/design/resources/technical−documentation
onsemi Website: www.onsemi.com

ONLINE SUPPORT: www.onsemi.com/support
For additional information, please contact your local Sales Representative at www.onsemi.com/support/sales