MOSFET – N-Channel, POWERTRENCH®

150 V, 167 A, 5.9 mΩ

FDH055N15A

V_{DS}	$R_{DS(on)}$ MAX	I_D MAX
150 V	5.9 mΩ @ 10 V	167 A

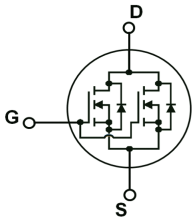

N-CHANNEL MOSFET

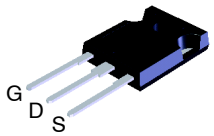

TO−247−3LD
CASE 340CK

Description

This N−Channel MOSFET is produced using **onsemi**'s advanced POWERTRENCH process that has been tailored to minimize the on−state resistance while maintaining superior switching performance.

Features

- $R_{DS(on)}$ = 4.8 mΩ (Typ.) @ V_{GS} = 10 V, I_D = 120 A
- Fast Switching Speed
- Low Gate Charge
- High Performance Trench Technology for Extremely Low $R_{DS(on)}$
- High Power and Current Handling Capability
- This Device is Pb−Free and is RoHS Compliant

Applications

- Synchronous Rectification for ATX / Sever / Telecom PSU
- Battery Protection Circuit
- Motor Drives and Uninterruptible Power Supplies
- Micro Solar Inverter

MARKING DIAGRAM

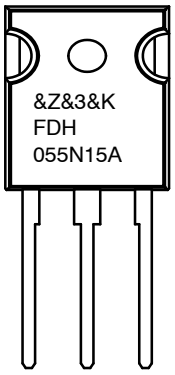

&Z	= Assembly Plant Code
&3	= Numeric Date Code
&K	= Lot Code
FDH055N15A	= Specific Device Code

ORDERING INFORMATION

See detailed ordering and shipping information on page 2 of this data sheet.

© Semiconductor Components Industries, LLC, 2011

ABSOLUTE MAXIMUM RATINGS (T_C = 25°C unless otherwise noted)

Symbol	Parameter		FDH055N15A	Unit
V_{DSS}	Drain to Source Voltage		150	V
V_{GSS}	Gate to Source Voltage	– DC	±20	V
		– AC (f > 1 Hz)	±30	
I_D	Drain Current	– Continuous (T_C = 25°C, Silicon Limited)	167 (Note 1)	A
		– Continuous (T_C = 100°C, Silicon Limited)	118	
		– Continuous (T_C = 25°C, Package Limited)	156	
I_{DM}	Drain Current	– Pulsed (Note 2)	668	A
E_{AS}	Single Pulsed Avalanche Energy (Note 3)		835	mJ
dv/dt	Peak Diode Recovery dv/dt (Note 4)		6.0	V/ns
P_D	Power Dissipation	(T_C = 25°C)	429	W
		– Derate above 25°C	2.86	W/°C
T_J, T_{STG}	Operating and Storage Temperature Range		–55 to + 175	°C
T_L	Maximum Lead Temperature for Soldering, 1/8″ from Case for 5 Second		300	°C

Stresses exceeding those listed in the Maximum Ratings table may damage the device. If any of these limits are exceeded, device functionality should not be assumed, damage may occur and reliability may be affected.

1. Calculated continuous current based on maximum allowable junction temperature, Package limitation current is 156 A.
2. Repetitive Rating: Pulse width limited by maximum junction temperature.
3. Starting T_J = 25°C, L = 3 mH, I_{AS} = 23.6 A
4. I_{SD} ≤ 120 A, di/dt ≤ 200 A/s, V_{DD} ≤ BV_{DSS}, Starting T_J = 25°C.

THERMAL CHARACTERISTICS

Symbol	Parameter	FDH055N15A	Unit
$R_{\theta JC}$	Thermal Resistance, Junction to Case, Max.	0.35	°C/W
$R_{\theta JA}$	Thermal Resistance, Junction to Ambient, Max.	40	

PACKAGE MARKING AND ORDERING INFORMATION

Part Number	Top Mark	Package	Package Method	Reel Size	Tape Width	Quantity
FDH055N15A	FDH055N15A	TO−247−3LD	Tube	N/A	N/A	30 Units

ELECTRICAL CHARACTERISTICS (T_C = 25°C unless otherwise noted)

Symbol	Parameter	Test Condition	Min.	Typ.	Max.	Unit
OFF CHARACTERISTICS						
BV_{DSS}	Drain to Source Breakdown Voltage	I_D = 250 μA, V_{GS} = 0 V	150	–	–	V
ΔBV_{DSS} / ΔT_J	Breakdown Voltage Temperature Coefficient	I_D = 250 μA, Referenced to 25°C	–	0.1	–	V/°C
I_{DSS}	Zero Gate Voltage Drain Current	V_{DS} = 120 V, V_{GS} = 0 V	–	–	1	μA
		V_{DS} = 120 V, T_C = 150°C	–	–	500	
I_{GSS}	Gate to Body Leakage Current	V_{GS} = ±20 V, V_{DS} = 0 V	–	–	±100	nA
ON CHARACTERISTICS						
$V_{GS(th)}$	Gate Threshold Voltage	V_{GS} = V_{DS}, I_D = 250 μA	2.0	–	4.0	V
$R_{DS(on)}$	Static Drain to Source On Resistance	V_{GS} = 10 V, I_D = 120 A	–	4.8	5.9	mΩ
g_{FS}	Forward Transconductance	V_{DS} = 10 V, I_D = 120 A	–	219	–	S
DYNAMIC CHARACTERISTICS						
C_{iss}	Input Capacitance	V_{DS} = 75 V, V_{GS} = 0 V, f = 1 MHz	–	7100	9445	pF
C_{oss}	Output Capacitance		–	664	885	pF
C_{rss}	Reverse Transfer Capacitance		–	23	35	pF
$C_{oss(er)}$	Energy Related Output Capacitance	V_{DS} = 75 V, V_{GS} = 0 V	–	1159	–	pF
$Q_{g(tot)}$	Total Gate Charge at 10 V	V_{DS} = 75 V, I_D = 120 A, V_{GS} = 10 V (Note 5)	–	92	–	nC
Q_{gs}	Gate to Source Gate Charge		–	31	–	nC
Q_{gs2}	Gate Charge Threshold to Plateau		–	15	–	nC
Q_{gd}	Gate to Drain “Miller” Charge		–	16	–	nC
ESR	Equivalent Series Resistance(G−S)	f = 1 MHz	–	1.2	–	Ω
SWITCHING CHARACTERISTICS						
$t_{d(on)}$	Turn-On Delay Time	V_{DD} = 75 V, I_D = 120 A, V_{GS} = 10 V, R_G = 4.7 Ω (Note 5)	–	35	80	ns
t_r	Turn−On Rise Time		–	67	144	ns
$t_{d(off)}$	Turn-Off Delay Time		–	71	152	ns
t_f	Turn−Off Fall Time		–	21	52	ns
DRAIN-SOURCE DIODE CHARACTERISTICS						
I_S	Maximum Continuous Drain to Source Diode Forward Current		–	–	167 (Note 1)	A
I_{SM}	Maximum Pulsed Drain to Source Diode Forward Current		–	–	668	A
V_{SD}	Drain to Source Diode Forward Voltage	V_{GS} = 0 V, I_{SD} = 120 A	–	–	1.25	V
t_{rr}	Reverse Recovery Time	V_{GS} = 0 V, I_{SD} = 120 A, V_{DS} = 75 V, dI_F/dt = 100 A/μs	–	105	–	ns
Q_{rr}	Reverse Recovery Charge		–	342	–	nC
Q_{rr}	Reverse Recovery Charge	V_{GS} = 0 V, I_{SD} = 30 A, V_{DS} = 75 V, dI_F/dt = 100 A/μs	–	348	–	nC

Product parametric performance is indicated in the Electrical Characteristics for the listed test conditions, unless otherwise noted. Product performance may not be indicated by the Electrical Characteristics if operated under different conditions.

5. Essentially Independent of Operating Temperature Typical Characteristics.

TYPICAL CHARACTERISTICS

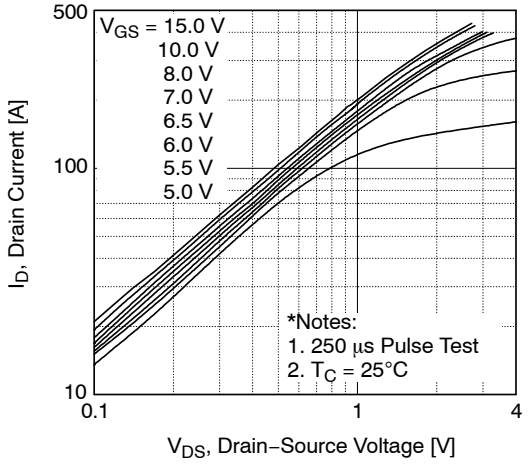

Figure 1. On−Region Characteristics

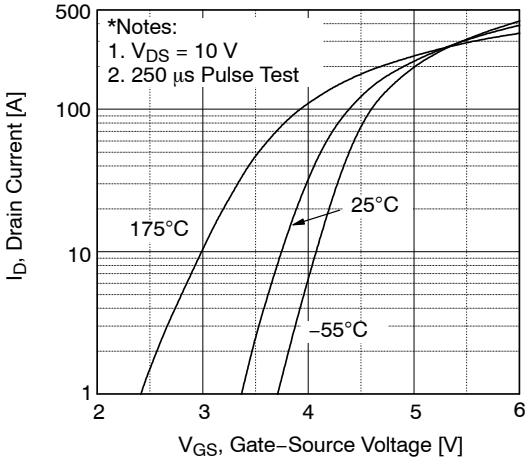

Figure 2. Transfer Characteristics

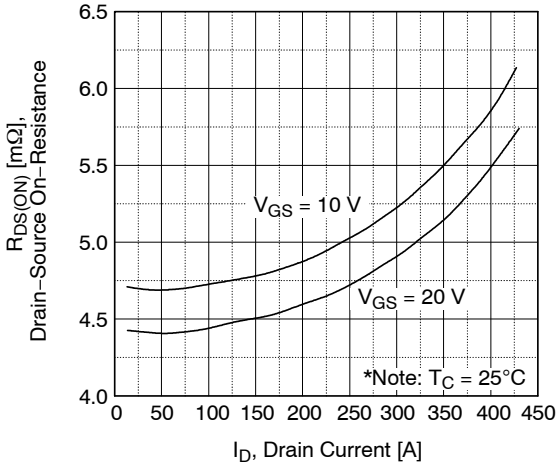

Figure 3. On−Resistance Variation vs. Drain Current and Gate Voltage

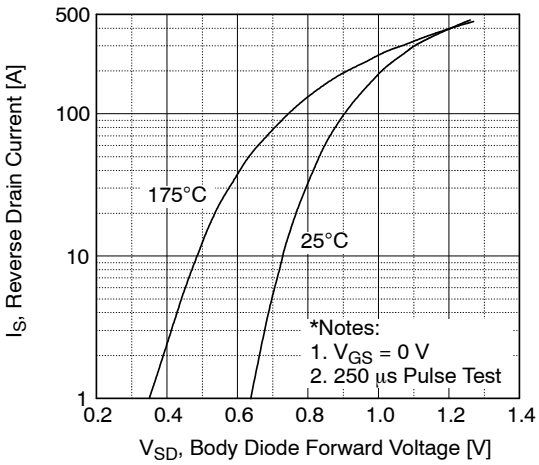

Figure 4. Body Diode Forward Voltage Variation vs. Source Current and Temperature

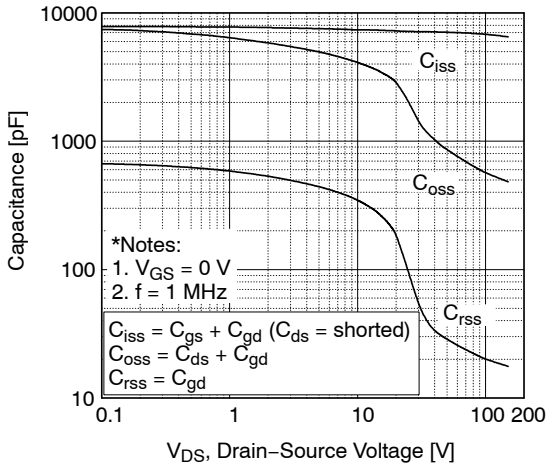

Figure 5. Capacitance Characteristics

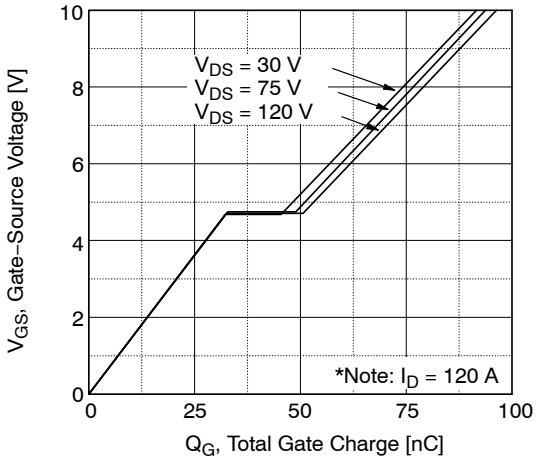

Figure 6. Gate Charge Characteristics

TYPICAL CHARACTERISTICS (continued)

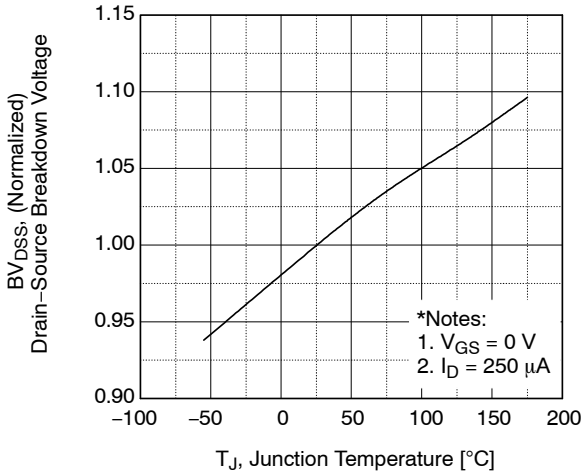

Figure 7. Breakdown Voltage Variation vs. Temperature

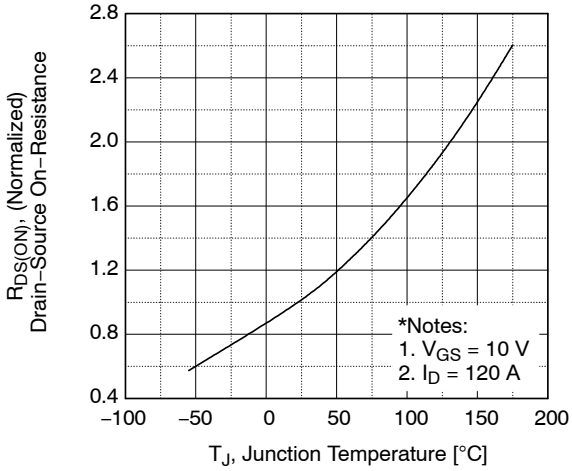

Figure 8. On−Resistance Variation vs. Temperature

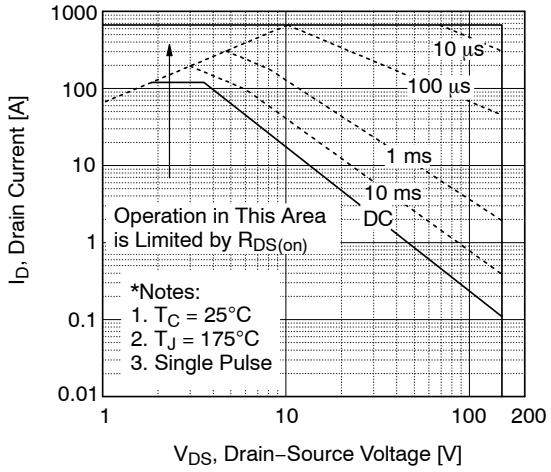

Figure 9. Maximum Safe Operating Area

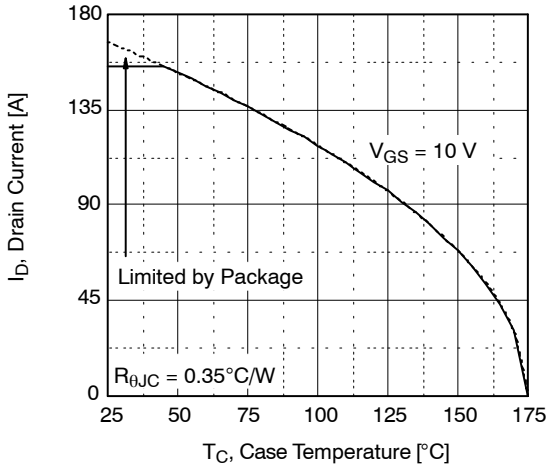

Figure 10. Maximum Drain Current vs. Case Temperature

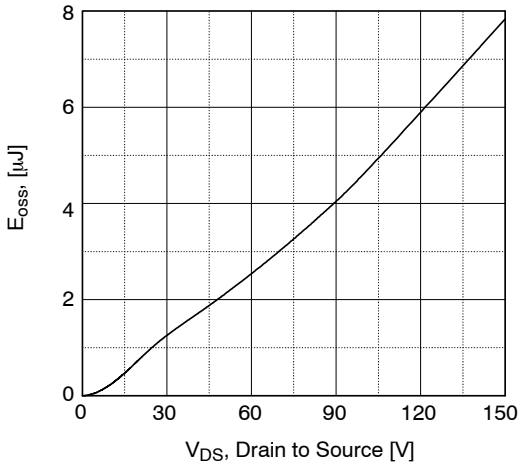

Figure 11. Eoss vs. Drain to Source Voltage

TYPICAL CHARACTERISTICS (continued)

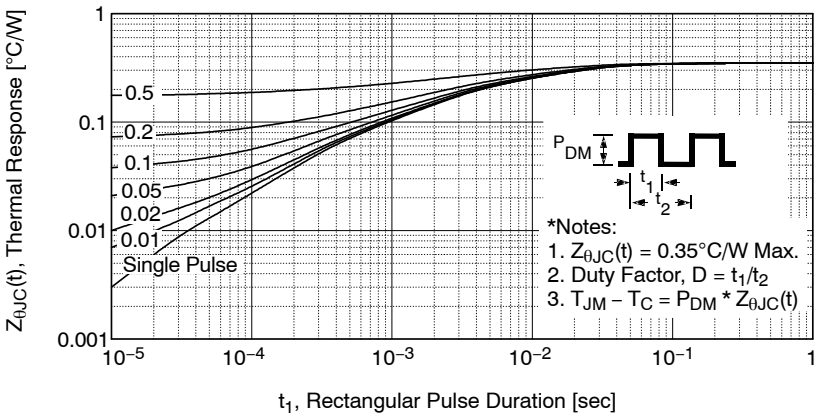

Figure 12. Transient Thermal Response Curve

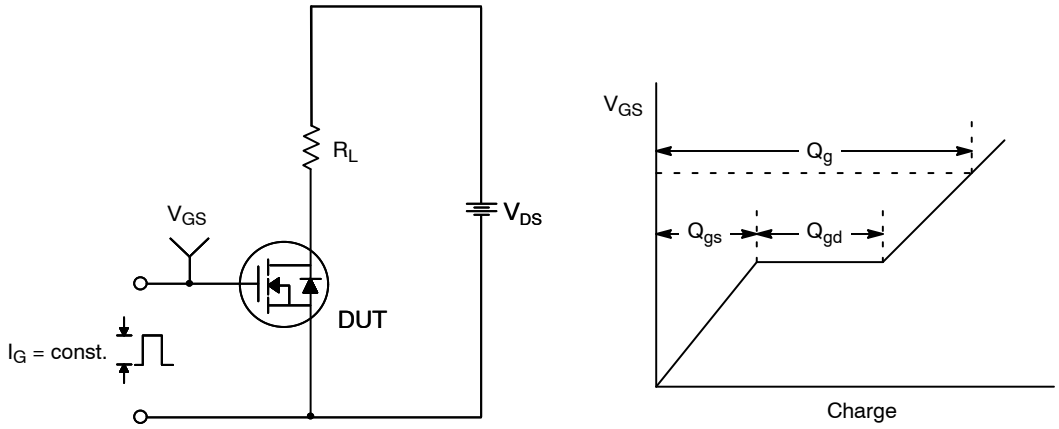

Figure 13. Gate Charge Test Circuit & Waveform

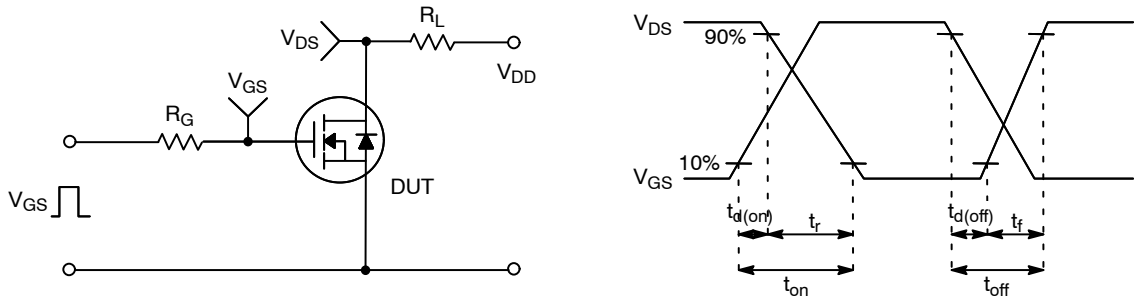

Figure 14. Resistive Switching Test Circuit & Waveforms

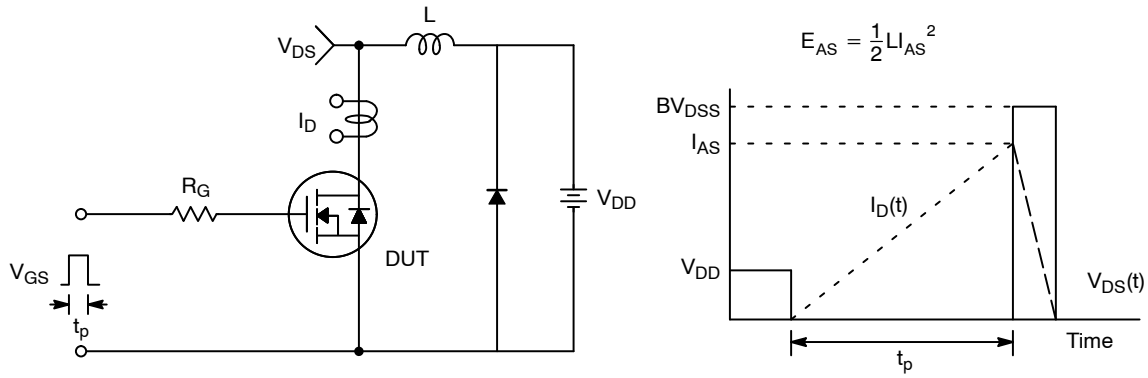

Figure 15. Unclamped Inductive Switching Test Circuit & Waveforms

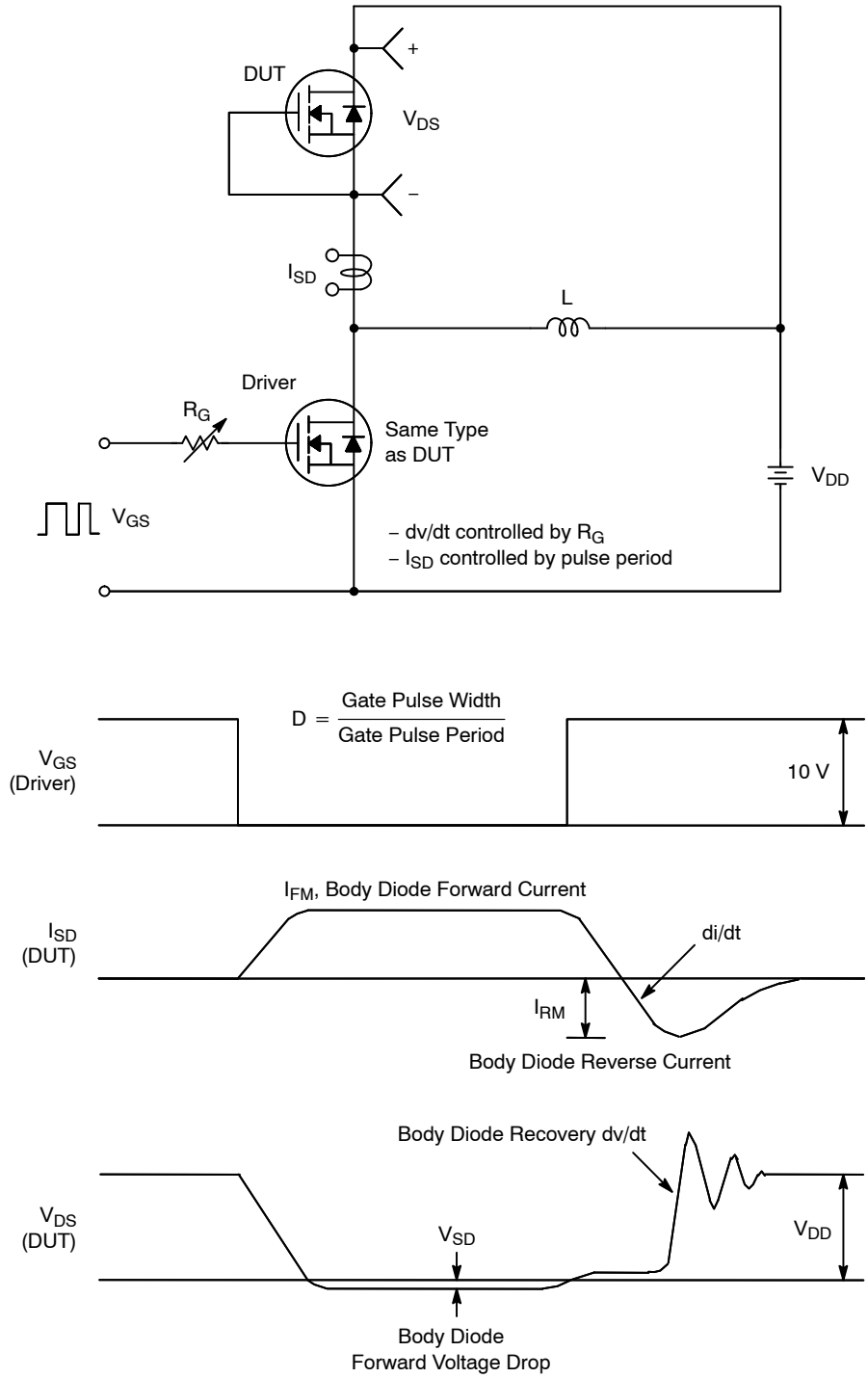

Figure 16. Peak Diode Recovery dv/dt Test Circuit & Waveforms

POWERTRENCH is registered trademark of Semiconductor Components Industries, LLC dba “**onsemi**” or its affiliates and/or subsidiaries in the United States and/or other countries.

MECHANICAL CASE OUTLINE
PACKAGE DIMENSIONS

ON Semiconductor®

TO−247−3LD SHORT LEAD
CASE 340CK
ISSUE A

DATE 31 JAN 2019

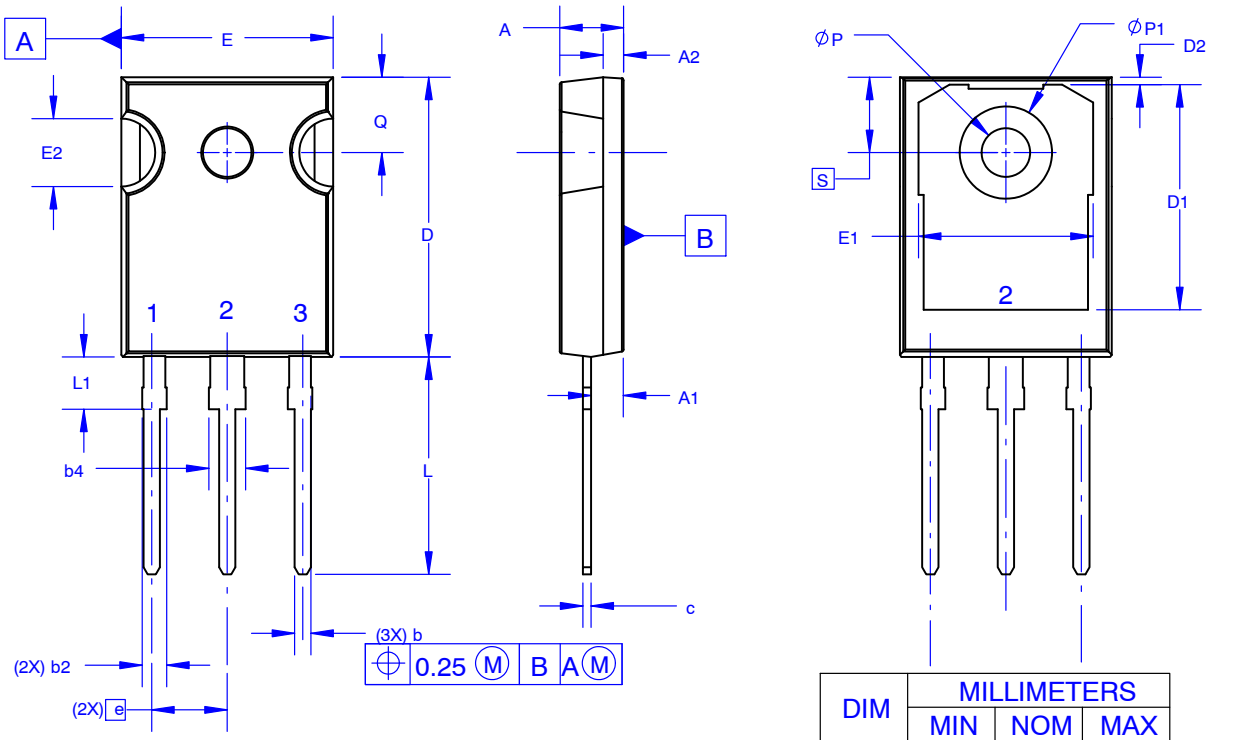

DIM	MILLIMETERS		
	MIN	NOM	MAX
A	4.58	4.70	4.82
A1	2.20	2.40	2.60
A2	1.40	1.50	1.60
b	1.17	1.26	1.35
b2	1.53	1.65	1.77
b4	2.42	2.54	2.66
c	0.51	0.61	0.71
D	20.32	20.57	20.82
D1	13.08	~	~
D2	0.51	0.93	1.35
E	15.37	15.62	15.87
E1	12.81	~	~
E2	4.96	5.08	5.20
e	~	5.56	~
L	15.75	16.00	16.25
L1	3.69	3.81	3.93
ØP	3.51	3.58	3.65
ØP1	6.60	6.80	7.00
Q	5.34	5.46	5.58
S	5.34	5.46	5.58

NOTES: UNLESS OTHERWISE SPECIFIED.

A. DIMENSIONS ARE EXCLUSIVE OF BURRS, MOLD FLASH, AND TIE BAR EXTRUSIONS.
B. ALL DIMENSIONS ARE IN MILLIMETERS.
C. DRAWING CONFORMS TO ASME Y14.5 - 2009.
D. DIMENSION A1 TO BE MEASURED IN THE REGION DEFINED BY L1.
E. LEAD FINISH IS UNCONTROLLED IN THE REGION DEFINED BY L1.

GENERIC
MARKING DIAGRAM*

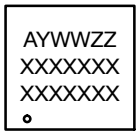

XXXX = Specific Device Code
A = Assembly Location
Y = Year
WW = Work Week
ZZ = Assembly Lot Code

*This information is generic. Please refer to device data sheet for actual part marking. Pb−Free indicator, “G” or microdot “▪”, may or may not be present. Some products may not follow the Generic Marking.

DOCUMENT NUMBER:	**98AON13851G**	Electronic versions are uncontrolled except when accessed directly from the Document Repository. Printed versions are uncontrolled except when stamped “CONTROLLED COPY” in red.
DESCRIPTION:	**TO−247−3LD SHORT LEAD**	**PAGE 1 OF 1**

ON Semiconductor and ON are trademarks of Semiconductor Components Industries, LLC dba ON Semiconductor or its subsidiaries in the United States and/or other countries. ON Semiconductor reserves the right to make changes without further notice to any products herein. ON Semiconductor makes no warranty, representation or guarantee regarding the suitability of its products for any particular purpose, nor does ON Semiconductor assume any liability arising out of the application or use of any product or circuit, and specifically disclaims any and all liability, including without limitation special, consequential or incidental damages. ON Semiconductor does not convey any license under its patent rights nor the rights of others.

© Semiconductor Components Industries, LLC, 2018

onsemi, , and other names, marks, and brands are registered and/or common law trademarks of Semiconductor Components Industries, LLC dba "**onsemi**" or its affiliates and/or subsidiaries in the United States and/or other countries. **onsemi** owns the rights to a number of patents, trademarks, copyrights, trade secrets, and other intellectual property. A listing of **onsemi**'s product/patent coverage may be accessed at www.onsemi.com/site/pdf/Patent−Marking.pdf. **onsemi** reserves the right to make changes at any time to any products or information herein, without notice. The information herein is provided "as−is" and **onsemi** makes no warranty, representation or guarantee regarding the accuracy of the information, product features, availability, functionality, or suitability of its products for any particular purpose, nor does **onsemi** assume any liability arising out of the application or use of any product or circuit, and specifically disclaims any and all liability, including without limitation special, consequential or incidental damages. Buyer is responsible for its products and applications using **onsemi** products, including compliance with all laws, regulations and safety requirements or standards, regardless of any support or applications information provided by **onsemi**. "Typical" parameters which may be provided in **onsemi** data sheets and/or specifications can and do vary in different applications and actual performance may vary over time. All operating parameters, including "Typicals" must be validated for each customer application by customer's technical experts. **onsemi** does not convey any license under any of its intellectual property rights nor the rights of others. **onsemi** products are not designed, intended, or authorized for use as a critical component in life support systems or any FDA Class 3 medical devices or medical devices with a same or similar classification in a foreign jurisdiction or any devices intended for implantation in the human body. Should Buyer purchase or use **onsemi** products for any such unintended or unauthorized application, Buyer shall indemnify and hold **onsemi** and its officers, employees, subsidiaries, affiliates, and distributors harmless against all claims, costs, damages, and expenses, and reasonable attorney fees arising out of, directly or indirectly, any claim of personal injury or death associated with such unintended or unauthorized use, even if such claim alleges that **onsemi** was negligent regarding the design or manufacture of the part. **onsemi** is an Equal Opportunity/Affirmative Action Employer. This literature is subject to all applicable copyright laws and is not for resale in any manner.

ADDITIONAL INFORMATION

TECHNICAL PUBLICATIONS:
Technical Library: www.onsemi.com/design/resources/technical−documentation
onsemi Website: www.onsemi.com

ONLINE SUPPORT: www.onsemi.com/support
For additional information, please contact your local Sales Representative at www.onsemi.com/support/sales