Hyperfast Diode

75 A, 600 V

FFH75H60S

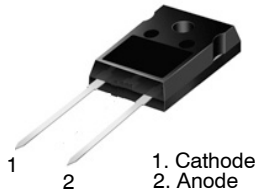

TO−247−2LD
CASE 340CL

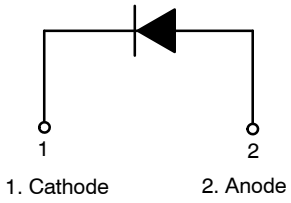

Description

The FFH75H60S is a hyperfast diode with soft recovery characteristics. It has the half recovery time of ultrafast diodes and is silicon nitride passivated ionimplanted epitaxial planar construction. These devices are intended to be used as freewheeling/clamping diodes and diodes in a variety of switching power supplies and other power switching applications. Their low stored charge and hyperfast soft recovery minimize ringing and electrical noise in many power switching circuits reducing power loss in the switching transistors.

Features

- Hyperfast Recovery t_{rr} = 75 ns (@ I_F = 75 A)
- Max Forward Voltage, V_F = 1.8 V (@ T_C = 25°C)
- 600 V Reverse Voltage and High Reliability
- Avalanche Energy Rated
- This Device is Pb−Free and is RoHS Compliant

Applications

- General Purpose
- SMPS, Solar Inverter, UPC
- Power Switching Circuits
- Solar Inverter, UPC

MARKING DIAGRAM

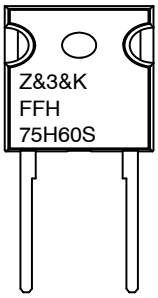

&Z	= Assembly Plant Code
&3	= Numeric Date Code
&K	= Lot Code
FFH75H60S	= Specific Device Code

ORDERING INFORMATION

See detailed ordering and shipping information on page 2 of this data sheet.

ABSOLUTE MAXIMUM RATINGS (T_C = 25°C unless otherwise noted)

Parameter	Symbol	Ratings	Unit
Peak Repetitive Reverse Voltage	V_{RRM}	600	V
Working Peak Reverse Voltage	V_{RWM}	600	V
DC Blocking Voltage	V_R	600	V
Average Rectified Forward Current (T_C = 105°C)	$I_{F(AV)}$	75	A
Non−repetitive Peak Surge Current 60 Hz Single Half−Sine Wave	I_{FSM}	750	A
Operating Junction and Storage Temperature	T_J, T_{STG}	−65 to 175	°C

Stresses exceeding those listed in the Maximum Ratings table may damage the device. If any of these limits are exceeded, device functionality should not be assumed, damage may occur and reliability may be affected.

© Semiconductor Components Industries, LLC, 2012

THERMAL CHARACTERISTICS (T_C = 25°C unless otherwise noted)

Parameter	Symbol	Max	Unit
Maximum Thermal Resistance, Junction to Case	$R_{\theta JC}$	0.4	°C/W

PACKAGE MARKING AND ORDERING INFORMATION

Device	Device Marking	Package	Packing Method	Reel Size	Tape Width	Quantity
FFH75H60S	FFH75H60S	TO−247−2LD	Tube	N/A	N/A	30

ELECTRICAL Characteristics (T_C = 25°C unless otherwise specified)

Parameter	Conditions		Min	Typ	Max	Unit
V_F (Note 1)	I_F = 75 A	T_C = 25°C	–	1.8	2.2	V
	I_F = 75 A	T_C = 125°C	–	1.6	2.0	V
I_R (Note 1)	V_R = 600 V	T_C = 25°C	–	–	100	μA
	V_R = 600 V	T_C = 125°C	–	–	1.0	mA
t_{rr}	I_F = 75 A, dI_F/dt = 200 A/μs, V_R = 390 V	T_C = 25°C	–	40	75	ns
		T_C = 125°C	–	85	–	ns
t_a	I_F = 75 A, dI_F/dt = 200 A/μs, V_R = 390 V	T_C = 25°C	–	23	–	ns
t_b		T_C = 25°C	–	17	–	ns
Q_{rr}		T_C = 25°C		80	–	nC
W_{AVL}	Avalanche Energy (L = 40 mH)		20	–	–	mJ

Product parametric performance is indicated in the Electrical Characteristics for the listed test conditions, unless otherwise noted. Product performance may not be indicated by the Electrical Characteristics if operated under different conditions.

1. Pulse: Test Pulse Width = 300 μs, Duty Cycle = 2%

TEST CIRCUITS AND WAVEFORMS

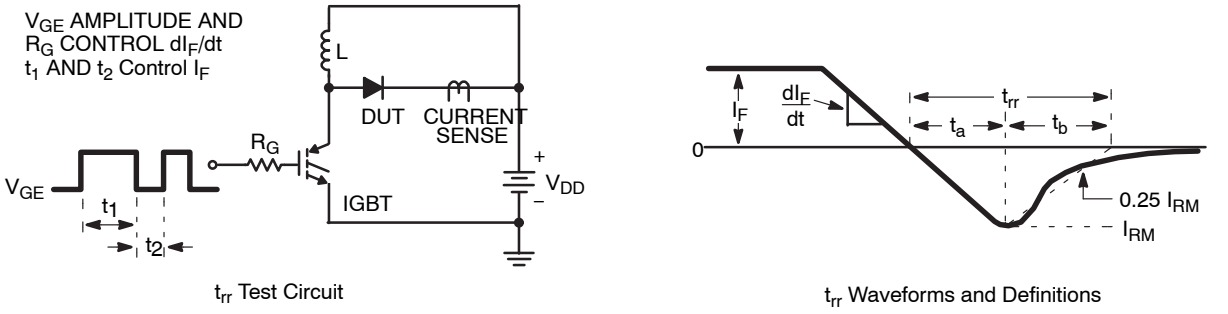

t_{rr} Test Circuit

t_{rr} Waveforms and Definitions

Figure 1. Diode Reverse Recovery Test Circuit & Waveform

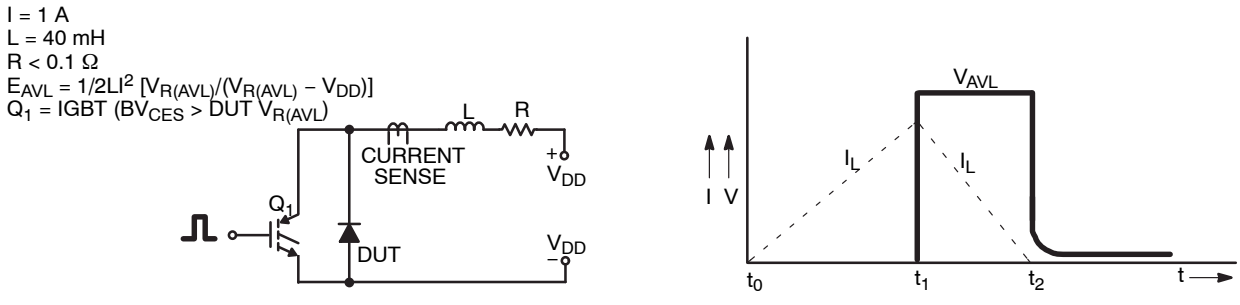

Avalanche Energy Test Circuit

Avalanche Current and Voltage Waveforms

Figure 2. Unclamped Inductive Switching Test Circuit & Waveform

TYPICAL PERFORMANCE CHARACTERISTICS

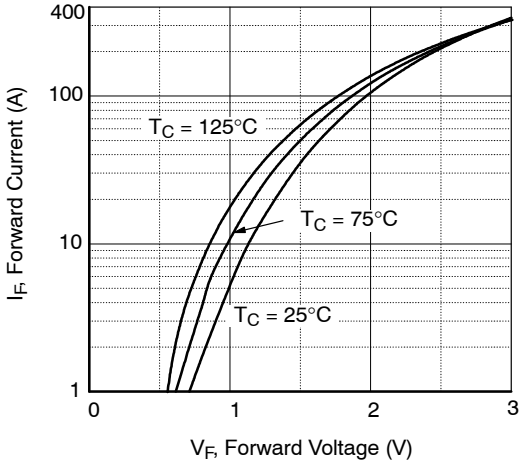

Figure 3. Typical Forward Voltage Drop vs. Forward Current

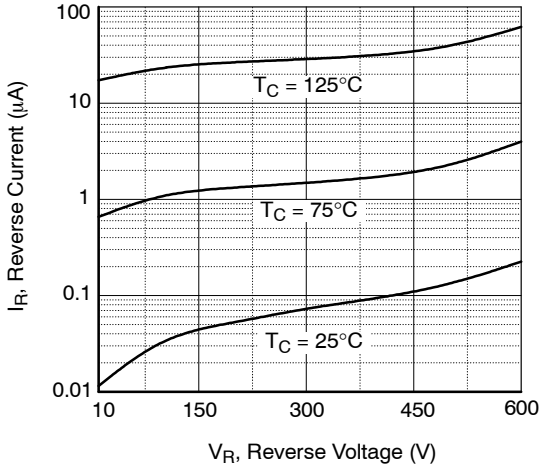

Figure 4. Typical Reverse Current vs. Reverse Voltage

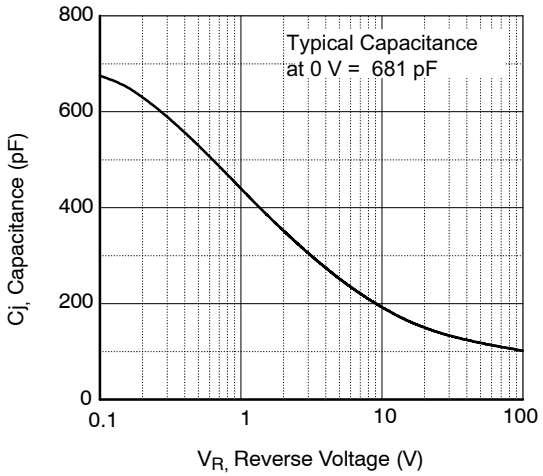

Figure 5. Typical Junction Capacitance

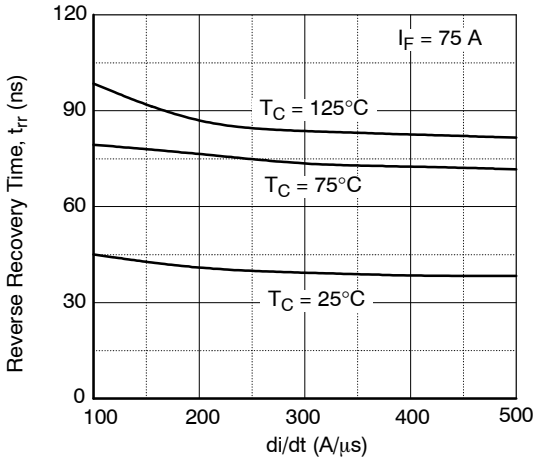

Figure 6. Typical Reverse Recovery Time vs. di/dt

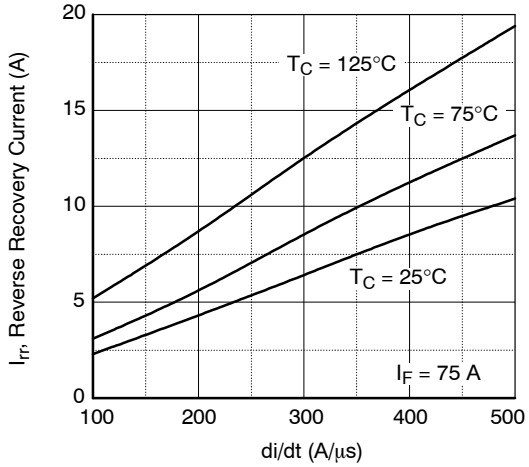

Figure 7. Typical Reverse Recovery Current vs. di/dt

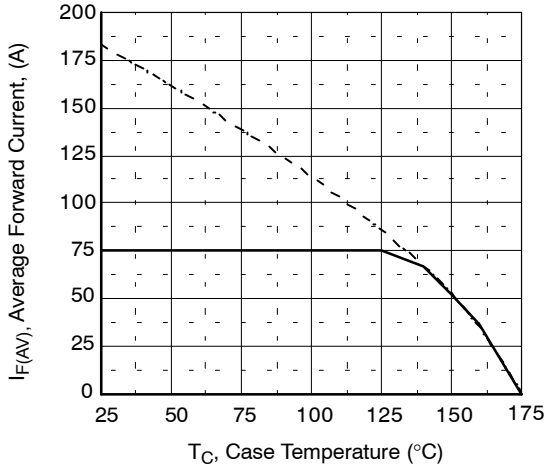

Figure 8. Forward Current Derating Curve

TYPICAL PERFORMANCE CHARACTERISTICS (CONTINUED)

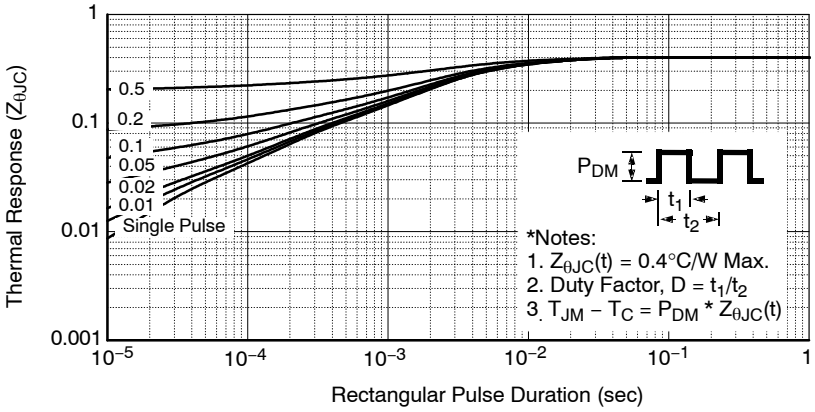

Figure 9. Transient Thermal Response Curve

MECHANICAL CASE OUTLINE
PACKAGE DIMENSIONS

ON Semiconductor®

TO−247−2LD
CASE 340CL
ISSUE A

DATE 03 DEC 2019

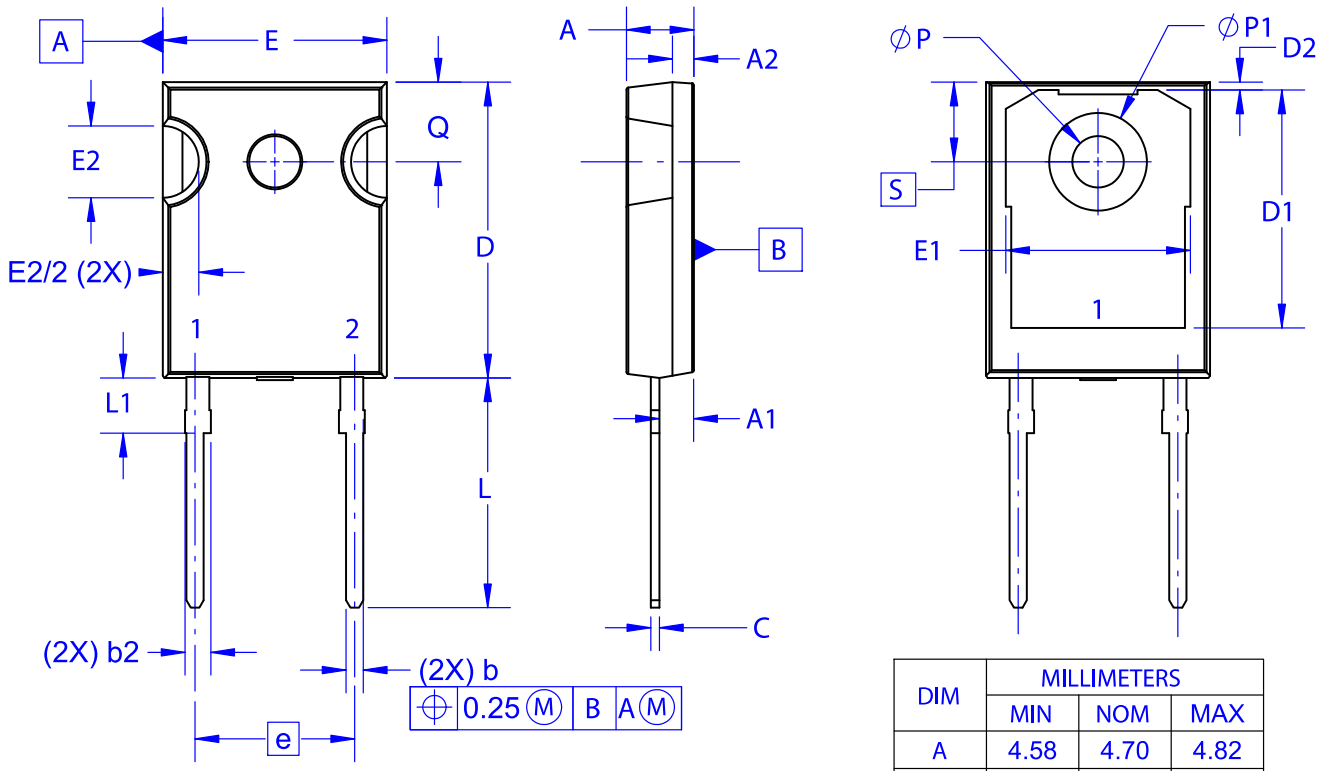

NOTES: UNLESS OTHERWISE SPECIFIED.

A. DIMENSIONS ARE EXCLUSIVE OF BURRS, MOLD FLASH, AND TIE BAR EXTRUSIONS.
B. ALL DIMENSIONS ARE IN MILLIMETERS.
C. DRAWING CONFORMS TO ASME Y14.5 - 2009.
D. DIMENSION A1 TO BE MEASURED IN THE REGION DEFINED BY L1.
E. LEAD FINISH IS UNCONTROLLED IN THE REGION DEFINED BY L1.

DIM	MILLIMETERS		
	MIN	NOM	MAX
A	4.58	4.70	4.82
A1	2.29	2.40	2.66
A2	1.30	1.50	1.70
b	1.17	1.26	1.35
b2	1.53	1.65	1.77
c	0.51	0.61	0.71
D	20.32	20.57	20.82
D1	16.37	16.57	16.77
D2	0.51	0.93	1.35
E	15.37	15.62	15.87
E1	12.81	~	~
E2	4.96	5.08	5.20
e	~	11.12	~
L	15.75	16.00	16.25
L1	3.69	3.81	3.93
ØP	3.51	3.58	3.65
ØP1	6.61	6.73	6.85
Q	5.34	5.46	5.58
S	5.34	5.46	5.58

GENERIC MARKING DIAGRAM*

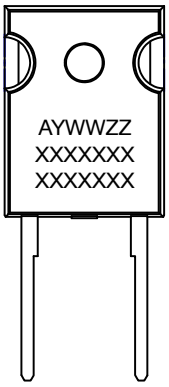

XXXX = Specific Device Code
A = Assembly Location
Y = Year
WW = Work Week
ZZ = Assembly Lot Code

*This information is generic. Please refer to device data sheet for actual part marking. Pb−Free indicator, “G” or microdot “▪”, may or may not be present. Some products may not follow the Generic Marking.

DOCUMENT NUMBER:	**98AON13850G**	Electronic versions are uncontrolled except when accessed directly from the Document Repository. Printed versions are uncontrolled except when stamped “CONTROLLED COPY” in red.
DESCRIPTION:	**TO−247−2LD**	**PAGE 1 OF 1**

ON Semiconductor and ON are trademarks of Semiconductor Components Industries, LLC dba ON Semiconductor or its subsidiaries in the United States and/or other countries. ON Semiconductor reserves the right to make changes without further notice to any products herein. ON Semiconductor makes no warranty, representation or guarantee regarding the suitability of its products for any particular purpose, nor does ON Semiconductor assume any liability arising out of the application or use of any product or circuit, and specifically disclaims any and all liability, including without limitation special, consequential or incidental damages. ON Semiconductor does not convey any license under its patent rights nor the rights of others.

© Semiconductor Components Industries, LLC, 2018

onsemi, , and other names, marks, and brands are registered and/or common law trademarks of Semiconductor Components Industries, LLC dba "**onsemi**" or its affiliates and/or subsidiaries in the United States and/or other countries. **onsemi** owns the rights to a number of patents, trademarks, copyrights, trade secrets, and other intellectual property. A listing of **onsemi**'s product/patent coverage may be accessed at www.onsemi.com/site/pdf/Patent−Marking.pdf. **onsemi** reserves the right to make changes at any time to any products or information herein, without notice. The information herein is provided "as−is" and **onsemi** makes no warranty, representation or guarantee regarding the accuracy of the information, product features, availability, functionality, or suitability of its products for any particular purpose, nor does **onsemi** assume any liability arising out of the application or use of any product or circuit, and specifically disclaims any and all liability, including without limitation special, consequential or incidental damages. Buyer is responsible for its products and applications using **onsemi** products, including compliance with all laws, regulations and safety requirements or standards, regardless of any support or applications information provided by **onsemi**. "Typical" parameters which may be provided in **onsemi** data sheets and/or specifications can and do vary in different applications and actual performance may vary over time. All operating parameters, including "Typicals" must be validated for each customer application by customer's technical experts. **onsemi** does not convey any license under any of its intellectual property rights nor the rights of others. **onsemi** products are not designed, intended, or authorized for use as a critical component in life support systems or any FDA Class 3 medical devices or medical devices with a same or similar classification in a foreign jurisdiction or any devices intended for implantation in the human body. Should Buyer purchase or use **onsemi** products for any such unintended or unauthorized application, Buyer shall indemnify and hold **onsemi** and its officers, employees, subsidiaries, affiliates, and distributors harmless against all claims, costs, damages, and expenses, and reasonable attorney fees arising out of, directly or indirectly, any claim of personal injury or death associated with such unintended or unauthorized use, even if such claim alleges that **onsemi** was negligent regarding the design or manufacture of the part. **onsemi** is an Equal Opportunity/Affirmative Action Employer. This literature is subject to all applicable copyright laws and is not for resale in any manner.

ADDITIONAL INFORMATION

TECHNICAL PUBLICATIONS:
Technical Library: www.onsemi.com/design/resources/technical−documentation
onsemi Website: www.onsemi.com

ONLINE SUPPORT: www.onsemi.com/support
For additional information, please contact your local Sales Representative at www.onsemi.com/support/sales