FOD410, FOD4108, FOD4116, FOD4118

6-Pin DIP High dv/dt Zero-Cross Triac Drivers

ON Semiconductor®

www.onsemi.com

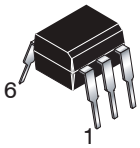

PDIP6 GW
CASE 709AG

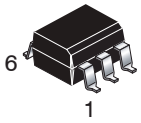

PDIP6 7.3x6.5, 2.54P
CASE 646CE

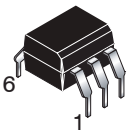

PDIP6 7.3x6.5, 2.54P
CASE 646CF

Description

The FOD410, FOD4108, FOD4116 and FOD4118 devices consist of an infrared emitting diode coupled to a hybrid triac formed with two inverse parallel SCRs which form the triac function capable of driving discrete triacs. The FOD4116 and FOD4118 utilize a high efficiency infrared emitting diode which offers an improved trigger sensitivity. These devices are housed in a standard 6−pin dual in−line (DIP) package.

Features

- 300 mA_{peak} On−State Current
- Zero−Voltage Crossing
- High Blocking Voltage
  - 600 V (FOD410, FOD4116)
  - 800 V (FOD4108, FOD4118)
- High Trigger Sensitivity
  - 1.3 mA (FOD4116, FOD4118)
  - 2 mA (FOD410, FOD4118)
- High Static dv/dt (10,000 V/μs)
- Safety and Regulatory Approvals:
  - UL1577, 5.000 VAC_{RMS} for 1 Minute
  - DIN−EN/IEC60747−5−5
- These Devices are Pb−Free and are RoHS Compliant

Applications

- Solid−State Relays
- Industrial Controls
- Lighting Controls
- Static Power Switches
- AC Motor Starters

MARKING DIAGRAM

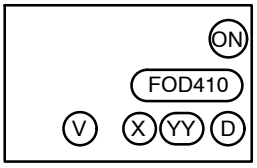

ON	= ON Semiconductor Logo
FOD410	= Device Number
V	= VDE mark. DIN EN/IEC60747−5−5 Option (only appears on component ordered with this option)
X	= One−Digit Year Code
YY	= Digit Work Week
D	= Assembly Package Code

FUNCTIONAL SCHEMATIC

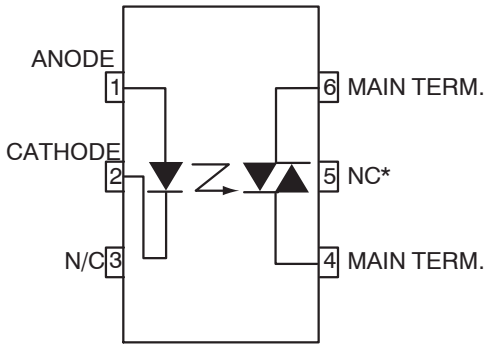

*DO NOT CONNECT
(TRIAC SUBSTRATE)

ORDERING INFORMATION

See detailed ordering and shipping information on page 10 of this data sheet.

© Semiconductor Components Industries, LLC, 2017

SAFETY AND INSULATION RATINGS

Parameter		Characteristics
Installation Classifications per DIN VDE 0110/1.89 Table 1, For Rated Mains Voltage	< 150 V_{RMS}	I–IV
	< 300 V_{RMS}	I–IV
Climatic Classification		55/100/21
Pollution Degree (DIN VDE 0110/1.89)		2
Comparative Tracking Index		175

Symbol	Parameter	Value	Unit
V_{PR}	Input–to–Output Test Voltage, Method A, V_{IORM} x 1.6 = V_{PR}, Type and Sample Test with t_m = 10 s, Partial Discharge < 5 pC	1360	V_{peak}
	Input–to–Output Test Voltage, Method B, V_{IORM} x 1.875 = V_{PR}, 100% Production Test with t_m = 1 s, Partial Discharge < 5 pC	1594	V_{peak}
V_{IORM}	Maximum Working Insulation Voltage	850	V_{peak}
V_{IOTM}	Highest Allowable Over–Voltage	6000	V_{peak}
	External Creepage	≥ 7	mm
	External Clearance	≥ 7	mm
DTI	Distance Through Insulation (Insulation Thickness)	≥ 0.4	mm
T_S	Case Temperature (Note 1)	175	°C
$I_{S,INPUT}$	Input Current (Note 1)	400	mA
$P_{S,OUTPUT}$	Output Power (Note 1)	700	mW
R_{IO}	Insulation Resistance at T_S, V_{IO} = 500 V (Note 1)	> 10^9	Ω

As per DIN EN/IEC 60747–5–5, this optocoupler is suitable for “safe electrical insulation” only within the safety limit data. Compliance with the safety ratings shall be ensured by means of protective circuits.

1. Safety limit values – maximum values allowed in the event of a failure.

ABSOLUTE MAXIMUM RATINGS (T_A = 25°C, Unless otherwise specified)

Symbol	Parameter	Device	Value	Unit
T_{STG}	Storage Temperature	All	−55 to +150	°C
T_{OPR}	Operating Temperature	All	−55 to +100	°C
T_J	Junction Temperature	All	−55 to +125	°C
T_{SOL}	Lead Solder Temperature	All	260 for 10 sec	°C
$P_{D(TOTAL)}$	Total Device Power Dissipation @ 25°C	All	500	mW
	Derate Above 25°C	All	6.6	mW/°C
EMITTER				
I_F	Continuous Forward Current	All	30	mA
V_R	Reverse Voltage	All	6	V
$P_{D(EMITTER)}$	Total Power Dissipation 25°C Ambient	All	50	mW
	Derate Above 25°C	All	0.71	mW/°C
DETECTOR				
V_{DRM}	Off−State Output Terminal Voltage	FOD410, FOD4116	600	V
		FOD4108, FOD4118	800	
I_{TSM}	Peak Non−Repetitive Surge Current (single cycle 60 Hz sine wave)	All	3	A_{peak}
I_{TM}	Peak On−State Current	All	300	mA_{peak}
$P_{D(DETECTOR)}$	Total Power Dissipation @ 25°C Ambient	All	450	mW
	Derate Above 25°C	All	5.9	mW/°C

Stresses exceeding those listed in the Maximum Ratings table may damage the device. If any of these limits are exceeded, device functionality should not be assumed, damage may occur and reliability may be affected.

ELECTRICAL CHARACTERISTICS (T_A = 25°C unless otherwise specified)

Symbol	Parameter	Test Conditions		Device	Min	Typ	Max	Unit
INDIVIDUAL COMPONENT CHARACTERISTICS								
Emitter								
V_F	Input Forward Voltage	I_F = 20 mA		All	–	1.25	1.50	V
I_R	Reverse Leakage Current	V_R = 6 V		All	–	0.0001	10	μA
Detector								
$I_{D(RMS)}$	Peak Blocking Current Either Direction	I_F = 0, T_A = 100°C (Note 2)	V_D = 600 V	FOD410, FOD4116	–	3	100	μA
			V_D = 800 V	FOD4108, FOD4118				
$I_{R(RMS)}$	Reverse Current	T_A = 100 °C	V_D = 600 V	FOD410, FOD4116	–	3	100	μA
			V_D = 800 V	FOD4108, FOD4118				
dv/dt	Critical Rate of Rise of Off−State Voltage	I_F = 0 A (Note 3)	V_D = V_{DRM}	All	10,000	–	–	V/μs
TRANSFER CHARACTERISTICS								
I_{FT}	LED Trigger Current	Main Terminal Voltage = 5 V (Note 4)		FOD410, FOD4108	–	0.65	2.0	mA
				FOD4116, FOD4118	–	0.65	1.3	
V_{TM}	Peak On−State Voltage, Either Direction	I_{TM} = 300 mA peak, I_F = Rated I_{FT}		All	–	2.2	3	V
I_H	Holding Current, Either Direction	V_T = 3 V		All	–	200	500	μA
I_L	Latching Current	V_T = 2.2 V		All	–	5	–	mA
t_{ON}	Turn−On Time	PF = 1.0, I_T = 300 mA	V_{RM} = V_{DM} = 424 VAC	FOD410, FOD4116, FOD4118	–	60	–	μs
			V_{RM} = V_{DM} = 565 VAC	FOD4108				
t_{OFF}	Turn−Off Time		V_{RM} = V_{DM} = 424 VAC	FOD410, FOD4116, FOD4118	–	52	–	μs
			V_{RM} = V_{DM} = 565 VAC	FOD4108				
dv/dt_C	Critical Rate of Rise of Voltage at Current Commutation	V_D = 230 V_{RMS}, I_D = 300 mA_{PK}		All	–	10	–	V/μs
di/dt_C	Critical Rate of Rise of On−State Current Commutation	V_D = 230 V_{RMS}, I_D = 300 mA_{PK}		All	–	9	–	A/ms
$dv_{(IO)}/dt$	Critical Rate of Rise of Coupled Input / Output Voltage	I_T = 0 A, V_{RM} = V_{DM} = 424 VAC		All	10,000	–	–	V/μs

2. Test voltage must be applied within dv/dt rating.
3. This is static dv/dt. Commutating dv/dt is a function of the load−driving thyristor(s) only.
4. All devices are guaranteed to trigger at an I_F value less than or equal to max I_{FT}. Therefore, recommended operating I_F lies between max I_{FT} (2 mA for FOD410 and FOD4108 and 1.3 mA for FOD4116 and FOD4118) and the absolute max I_F (30 mA).

ZERO CROSSING CHARACTERISTICS

Symbol	Parameter	Test Conditions	Device	Min	Typ	Max	Unit
V_{INH}	Inhibit Voltage (MT1−MT2 Voltage above which device will not trigger)	I_F = Rated I_{FT}	All	–	8	25	V_{peak}
I_{DRM2}	Leakage in Inhibit State	I_F = Rated $I_{FT,}$ Rated V_{DRM}, Off−State	All	–	20	200	μA

ISOLATION CHARACTERISTICS

V_{ISO}	Steady State Isolation Voltage	f = 60 Hz, t = 1 Minute (Note 5)	All	5,000	–	–	VAC_{RMS}

5. Isolation voltage, V_{ISO}, is an internal device dielectric breakdown rating. For this test, pins 1, 2 and 3 are common, and pins 4, 5 and 6 are common. 5,000 VAC_{RMS} for 1 minute duration is equivalent to 6,000 VAC_{RMS} for 1 second duration.

TYPICAL APPLICATION

Figure 1 shows a typical circuit for when hot line switching is required. In this circuit the “hot” side of the line is switched and the load connected to the cold or neutral side. The load may be connected to either the neutral or hot line.

Rin is calculated so that IF is equal to the rated IFT of the part, 2 mA for FOD410 and FOD4108, 1.3 mA for FOD4116 and FOD4118. The 39 Ω resistor and 0.01 μF capacitor are for snubbing of the triac and may or may not be necessary depending upon the particular triac and load use.

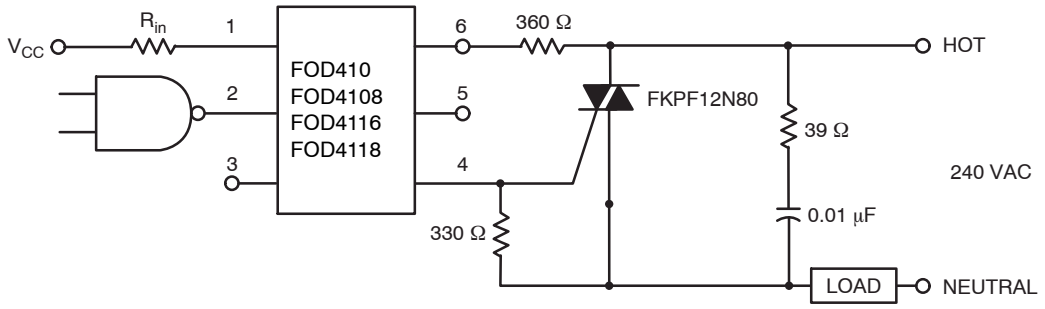

*For highly inductive loads (power factor < 0.5), change this value to 360 Ω.

Figure 1. Hot−Line Switching Application Circuit

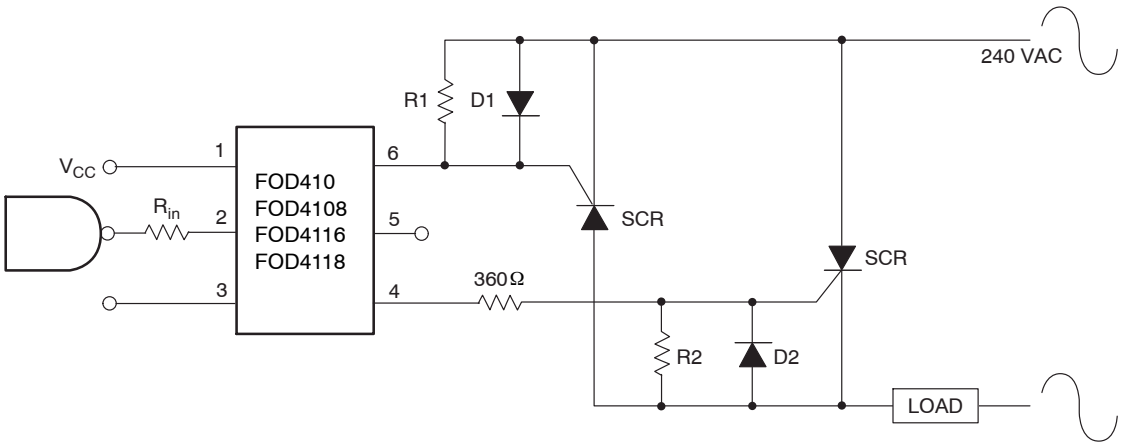

Figure 2. Inverse−Parallel SCR Driver Circuit

Suggested method of firing two, back−to−back SCR’s with a ON Semiconductor triac driver. Diodes can be 1N4001; resistors, R1 and R2, are optional 330 Ω.

NOTE: This optoisolator should not be used to drive a load directly. It is intended to be a discrete triac driver device only.

TYPICAL CHARACTERISTICS

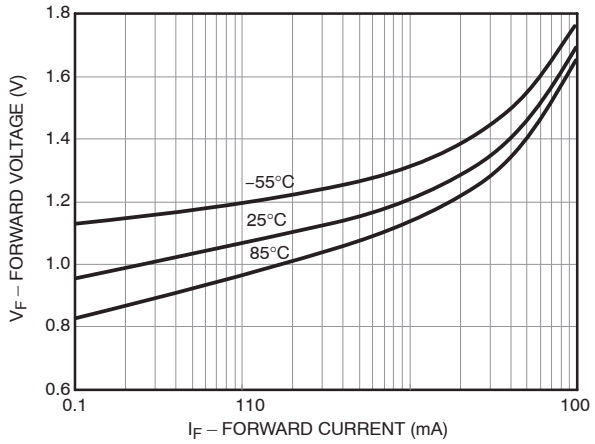

Figure 3. Forward Voltage (V_F) vs. Forward Current (I_F)

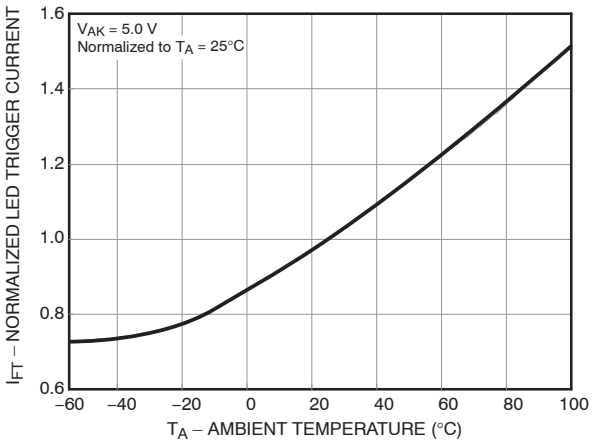

Figure 4. Normalized LED Trigger Current (I_{FT}) vs. Ambient Temperature (T_A)

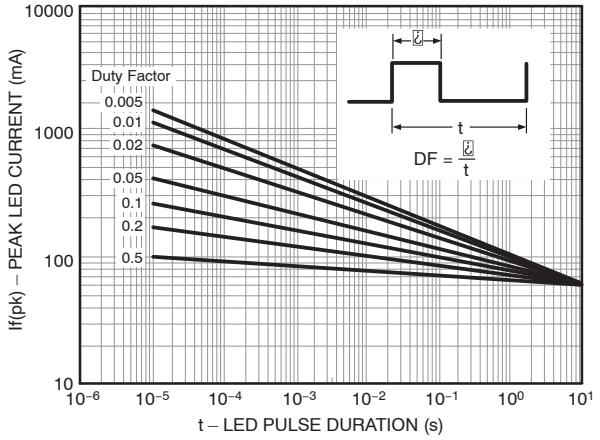

Figure 5. Peak LED Current vs. Duty Factor, Tau

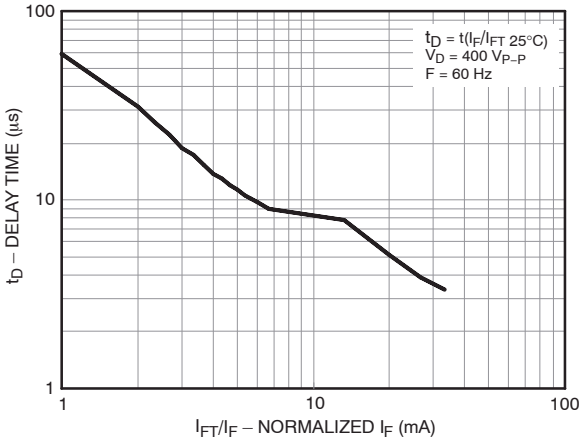

Figure 6. Trigger Delay Time

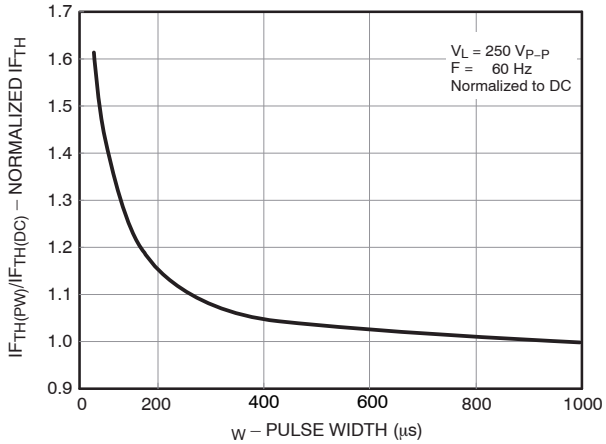

Figure 7. Pulse Trigger Current

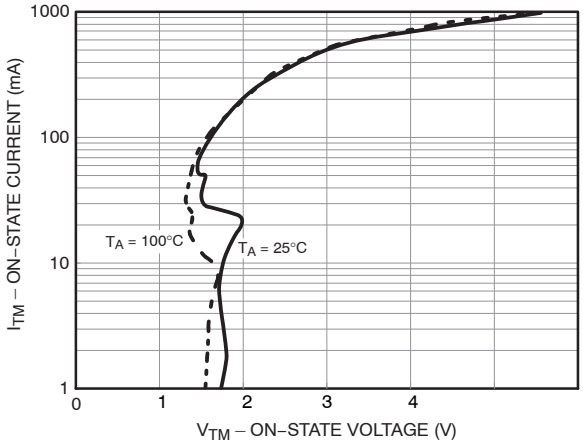

Figure 8. On−State Voltage (V_{TM}) vs. On−State Current (I_{TM})

TYPICAL CHARACTERISTICS (continued)

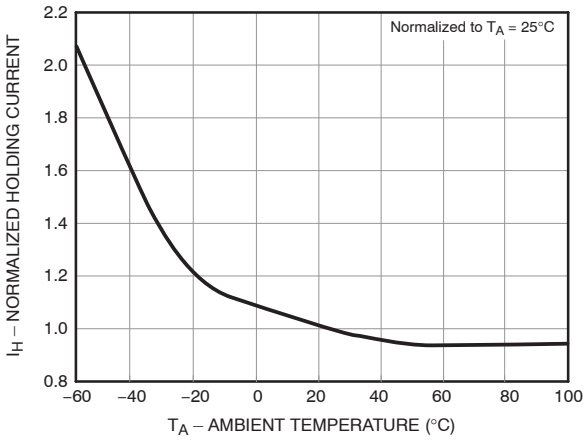

Figure 9. Normalized Holding Current (I_H) vs. Ambient Temperature (T_A)

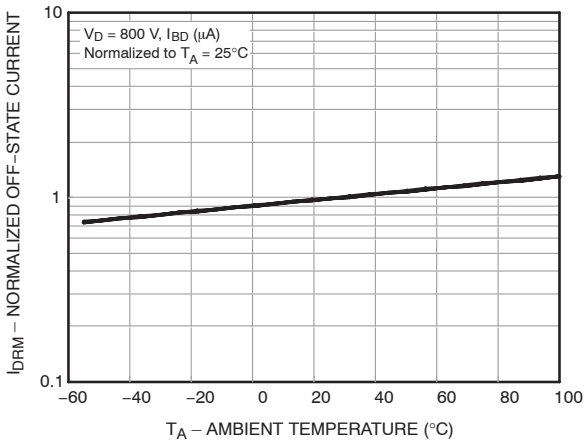

Figure 10. Normalized Off−State Current (I_{DRM}) vs. Ambient Temperature (T_A)

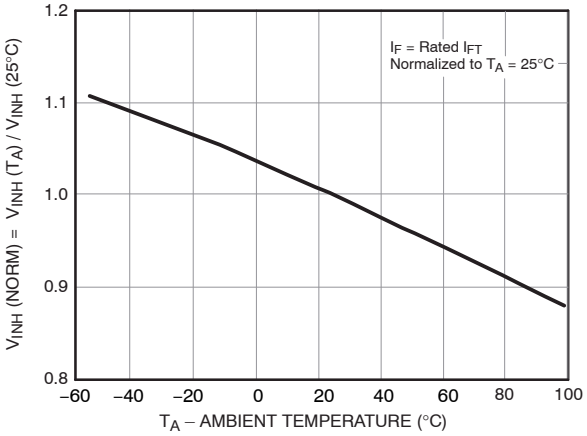

Figure 11. Normalized Inhibit Voltage (V_{INH}) vs. Ambient Temperature (T_A)

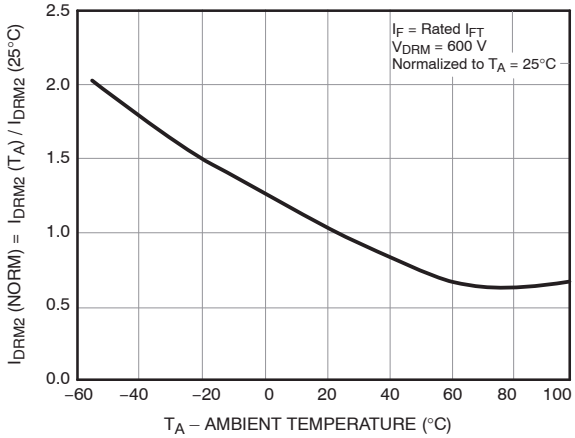

Figure 12. Normalized Leakage in Inhibit State (I_{DRM2}) vs. Ambient Temperature (T_A)

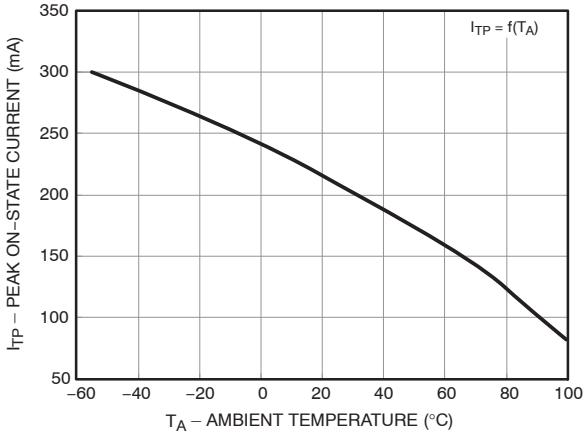

Figure 13. Current Reduction

REFLOW PROFILE

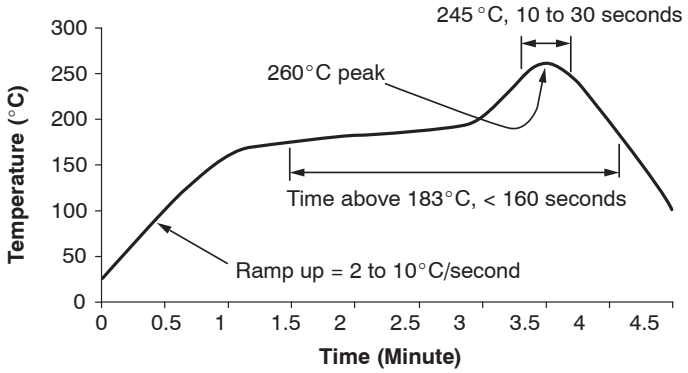

- Peak reflow temperature: 262°C (package surface temperature)
- Time of temperature higher than 185°C for 160 seconds or less
- One time soldering reflow is recommended

Figure 14. Reflow Profile

ORDERING INFORMATION

Part Number	Package	Shipping†
FOD410	DIP 6−Pin	Tube (50 Units)
FOD410S	SMT 6−Pin (Lead Bend)	Tube (50 Units)
FOD410SD	SMT 6−Pin (Lead Bend)	Tape and Reel (1000 Units)
FOD410V	DIP 6−Pin, DIN EN/IEC60747−5−5 Option	Tube (50 Units)
FOD410SV	SMT 6−Pin (Lead Bend), DIN EN/IEC60747−5−5 Option	Tube (50 Units)
FOD410SDV	SMT 6−Pin (Lead Bend), DIN EN/IEC60747−5−5 Option	Tape and Reel (1000 Units)
FOD410TV	DIP 6−Pin, 0.4” Lead Spacing, DIN EN/IEC60747−5−5 Option	Tube (50 Units)

†For information on tape and reel specifications, including part orientation and tape sizes, please refer to our Tape and Reel Packaging Specifications Brochure, BRD8011/D.

6. The product orderable part number system listed in this table also applies to the FOD4108, FOD4116, and FOD4118 product families.

PDIP6 7.3x6.5, 2.54P
CASE 646CE
ISSUE O

DATE 31 JUL 2016

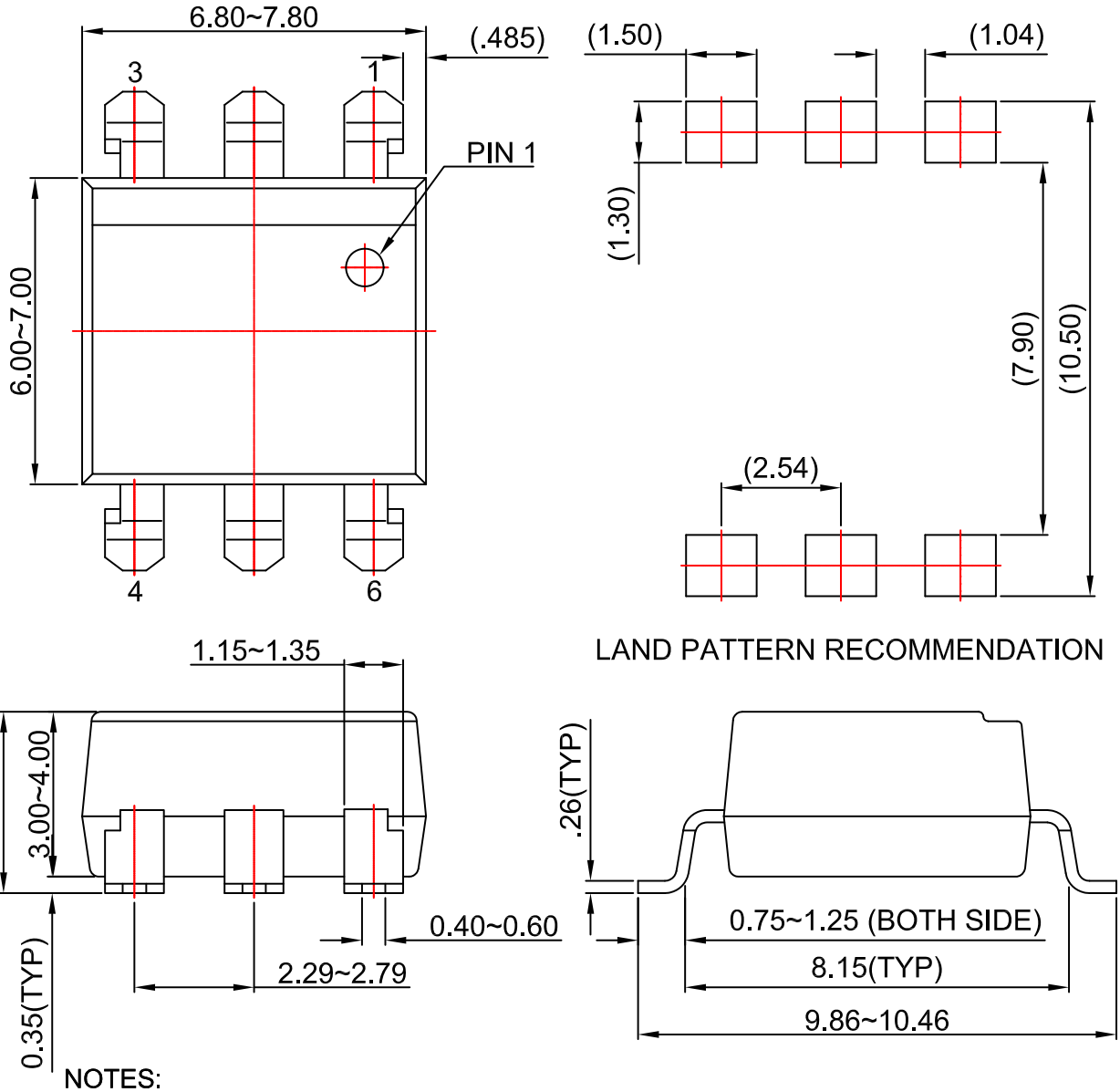

NOTES:

A) NO STANDARD APPLIES TO THIS PACKAGE.

B) ALL DIMENSIONS ARE IN MILLIMETERS.

C) DIMENSIONS ARE EXCLUSIVE OF BURRS, MOLD FLASH, AND TIE BAR EXTRUSION

DOCUMENT NUMBER:	**98AON13456G**	Electronic versions are uncontrolled except when accessed directly from the Document Repository. Printed versions are uncontrolled except when stamped "CONTROLLED COPY" in red.
DESCRIPTION:	**PDIP6 7.3X6.5, 2.54P**	**PAGE 1 OF 1**

ON Semiconductor and ON are trademarks of Semiconductor Components Industries, LLC dba ON Semiconductor or its subsidiaries in the United States and/or other countries. ON Semiconductor reserves the right to make changes without further notice to any products herein. ON Semiconductor makes no warranty, representation or guarantee regarding the suitability of its products for any particular purpose, nor does ON Semiconductor assume any liability arising out of the application or use of any product or circuit, and specifically disclaims any and all liability, including without limitation special, consequential or incidental damages. ON Semiconductor does not convey any license under its patent rights nor the rights of others.

© Semiconductor Components Industries, LLC, 2019

MECHANICAL CASE OUTLINE
PACKAGE DIMENSIONS

ON Semiconductor®

PDIP6 7.3x6.5, 2.54P
CASE 646CF
ISSUE O

DATE 31 JUL 2016

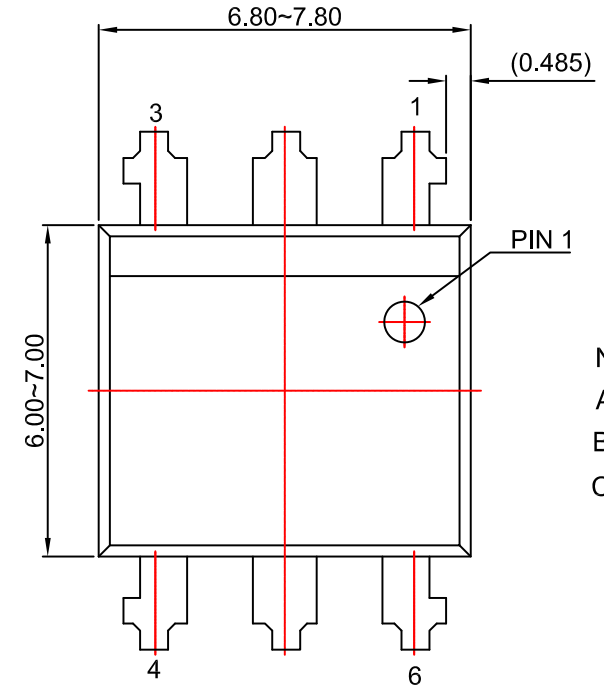

NOTES:

A) NO STANDARD APPLIES TO THIS PACKAGE.

B) ALL DIMENSIONS ARE IN MILLIMETERS.

C) DIMENSIONS ARE EXCLUSIVE OF BURRS, MOLD FLASH, AND TIE BAR EXTRUSION

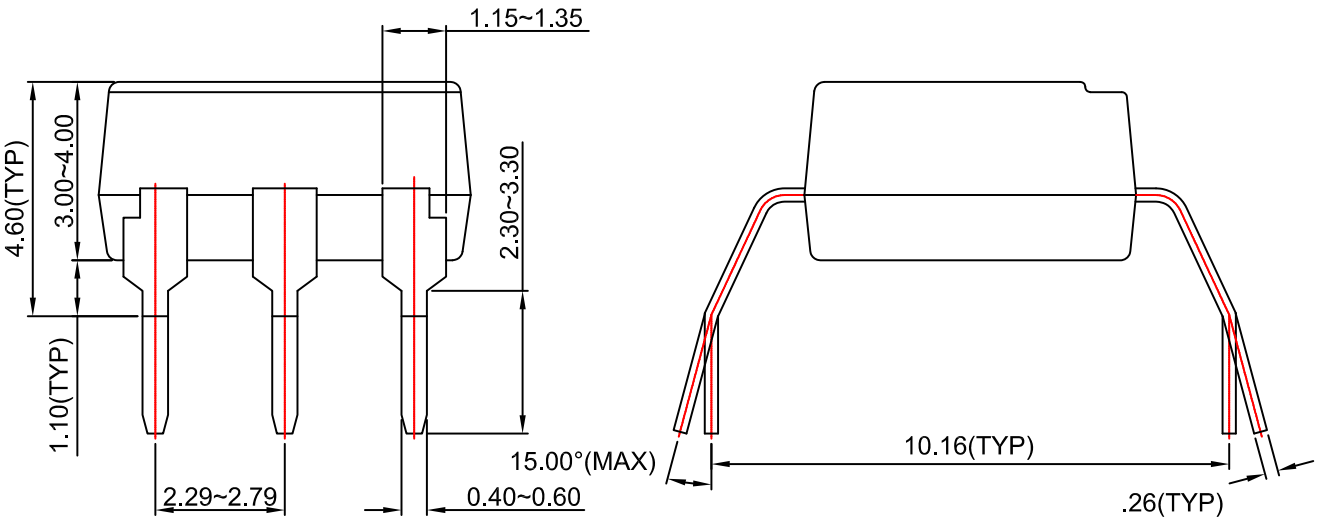

DOCUMENT NUMBER:	**98AON13457G**	Electronic versions are uncontrolled except when accessed directly from the Document Repository. Printed versions are uncontrolled except when stamped "CONTROLLED COPY" in red.
DESCRIPTION:	**PDIP6 7.3X6.5, 2.54P**	**PAGE 1 OF 1**

ON Semiconductor and ON are trademarks of Semiconductor Components Industries, LLC dba ON Semiconductor or its subsidiaries in the United States and/or other countries. ON Semiconductor reserves the right to make changes without further notice to any products herein. ON Semiconductor makes no warranty, representation or guarantee regarding the suitability of its products for any particular purpose, nor does ON Semiconductor assume any liability arising out of the application or use of any product or circuit, and specifically disclaims any and all liability, including without limitation special, consequential or incidental damages. ON Semiconductor does not convey any license under its patent rights nor the rights of others.

© Semiconductor Components Industries, LLC, 2019

MECHANICAL CASE OUTLINE
PACKAGE DIMENSIONS

ON Semiconductor®

PDIP6 GW
CASE 709AG
ISSUE A

DATE 31 JUL 2016

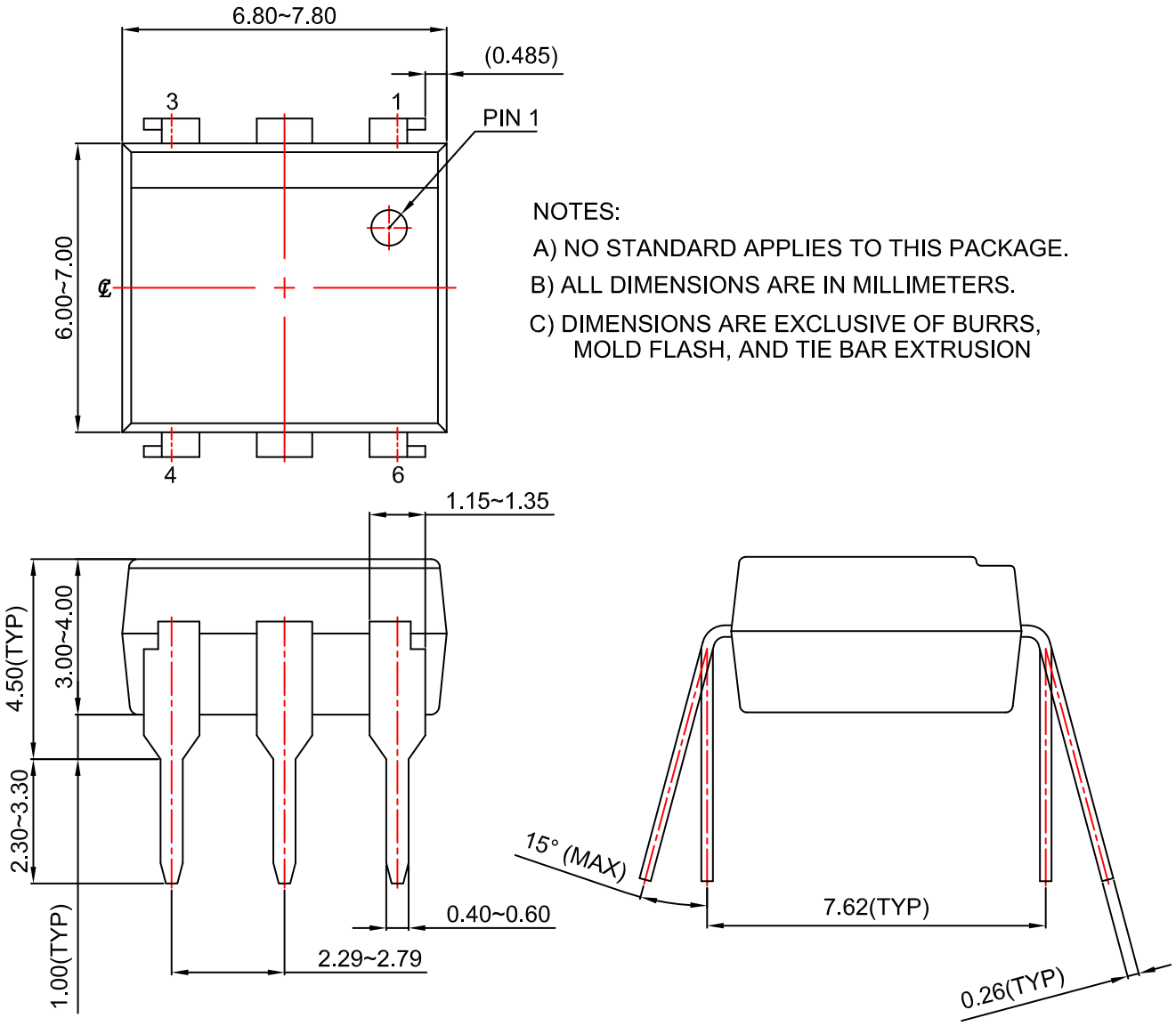

NOTES:

A) NO STANDARD APPLIES TO THIS PACKAGE.

B) ALL DIMENSIONS ARE IN MILLIMETERS.

C) DIMENSIONS ARE EXCLUSIVE OF BURRS, MOLD FLASH, AND TIE BAR EXTRUSION

DOCUMENT NUMBER:	**98AON13455G**	Electronic versions are uncontrolled except when accessed directly from the Document Repository. Printed versions are uncontrolled except when stamped "CONTROLLED COPY" in red.	
DESCRIPTION:	**PDIP6 GW**		**PAGE 1 OF 1**

ON Semiconductor and ON are trademarks of Semiconductor Components Industries, LLC dba ON Semiconductor or its subsidiaries in the United States and/or other countries. ON Semiconductor reserves the right to make changes without further notice to any products herein. ON Semiconductor makes no warranty, representation or guarantee regarding the suitability of its products for any particular purpose, nor does ON Semiconductor assume any liability arising out of the application or use of any product or circuit, and specifically disclaims any and all liability, including without limitation special, consequential or incidental damages. ON Semiconductor does not convey any license under its patent rights nor the rights of others.

© Semiconductor Components Industries, LLC, 2019

onsemi, , and other names, marks, and brands are registered and/or common law trademarks of Semiconductor Components Industries, LLC dba "**onsemi**" or its affiliates and/or subsidiaries in the United States and/or other countries. **onsemi** owns the rights to a number of patents, trademarks, copyrights, trade secrets, and other intellectual property. A listing of **onsemi**'s product/patent coverage may be accessed at www.onsemi.com/site/pdf/Patent−Marking.pdf. **onsemi** reserves the right to make changes at any time to any products or information herein, without notice. The information herein is provided "as−is" and **onsemi** makes no warranty, representation or guarantee regarding the accuracy of the information, product features, availability, functionality, or suitability of its products for any particular purpose, nor does **onsemi** assume any liability arising out of the application or use of any product or circuit, and specifically disclaims any and all liability, including without limitation special, consequential or incidental damages. Buyer is responsible for its products and applications using **onsemi** products, including compliance with all laws, regulations and safety requirements or standards, regardless of any support or applications information provided by **onsemi**. "Typical" parameters which may be provided in **onsemi** data sheets and/or specifications can and do vary in different applications and actual performance may vary over time. All operating parameters, including "Typicals" must be validated for each customer application by customer's technical experts. **onsemi** does not convey any license under any of its intellectual property rights nor the rights of others. **onsemi** products are not designed, intended, or authorized for use as a critical component in life support systems or any FDA Class 3 medical devices or medical devices with a same or similar classification in a foreign jurisdiction or any devices intended for implantation in the human body. Should Buyer purchase or use **onsemi** products for any such unintended or unauthorized application, Buyer shall indemnify and hold **onsemi** and its officers, employees, subsidiaries, affiliates, and distributors harmless against all claims, costs, damages, and expenses, and reasonable attorney fees arising out of, directly or indirectly, any claim of personal injury or death associated with such unintended or unauthorized use, even if such claim alleges that **onsemi** was negligent regarding the design or manufacture of the part. **onsemi** is an Equal Opportunity/Affirmative Action Employer. This literature is subject to all applicable copyright laws and is not for resale in any manner.

ADDITIONAL INFORMATION

TECHNICAL PUBLICATIONS:
Technical Library: www.onsemi.com/design/resources/technical−documentation
onsemi Website: www.onsemi.com

ONLINE SUPPORT: www.onsemi.com/support
For additional information, please contact your local Sales Representative at www.onsemi.com/support/sales