Dual Channel OptoHiT™ Series, High-Temperature Phototransistor Optocoupler in Small Outline 8-Pin Package

FOD8802 Series

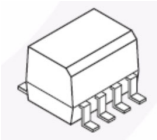

SOIC8
M SUFFIX
CASE 751DZ

Description

The FOD8802 dual channel optocoupler is a best−in−class phototransistor, optocoupler utilizing **onsemi**'s leading−edge proprietary process technology to achieve high operating temperature performance, up to 125°C. It consists of two aluminum gallium arsenide (AlGaAs) infrared light emitting diode optically coupled to two phototransistors, in a small outline, 8−pin SOIC package. It delivers consistent current transfer ratio at very low input current over temperature. The AlGaAs light ouput degradation performance is significantly better than the commodity optocoupler products that uses the standard GaAs, extending lifetime and reducing the guardband requirements to compensate for temperature drift. The input−output isolation voltage, Viso, is rated at 2500 VAC_{RMS}.

Features

- Excellent CTR Linearity at High Temperature
- CTR at Very Low Input Current, I_F
- High Isolation Voltage Regulated by Safety Agency, UL1577, 2500 VAC_{RMS} for 1 min.
- Applicable to Infrared Ray Reflow, 260°C
- These are Pb−Free Devices

Typical Applications

- Primarily Suited for DC−DC Converters
- For Ground Loop Isolation, Signal to Noise Isolation
- Communications – Adapters, Chargers
- Consumer – Appliances, Set Top Boxes
- Industrial – Power Supplies, Motor Control, Programmable Logic Control

MARKING DIAGRAM

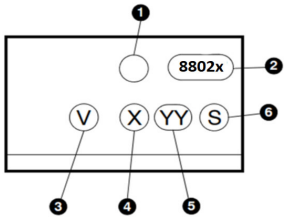

1. ON = Corporate Name
2. 8802x = Device Number
3. V = DIN EN/IEC60747−5−5 Option
4. X = One−Digit Year Code
5. YY = Digit Work Week
6. S = Assembly Package Code

PIN CONNECTIONS

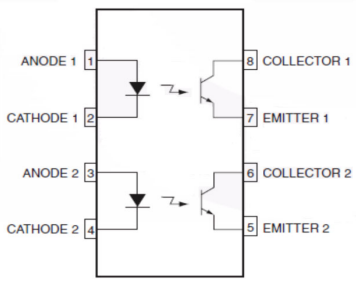

ORDERING INFORMATION

See detailed ordering, marking and shipping information in the package dimensions section on page 9 of this data sheet.

© Semiconductor Components Industries, LLC, 2020

Table 1. SAFETY AND INSULATION RATINGS
As per DIN_EN/IEC60747−5−5. this optocoupler is suitable for “safe electrical insulation” only within the safety limit data. Compliance with the safety ratings shall be ensured by means of protective circuits.

Parameter		Characteristics
Installation Classifications per DIN VDE 0110/1.89 Table 1, For Rated Mains Voltage	< 150 V_{RMS}	I–IV
	< 300 V_{RMS}	I–III
Climatic Classification		40/125/21
Pollution Degree (DIN VDE 0110/1.89)		2
Comparative Tracking Index		175

Symbol	Parameter	Value	Unit
VPR	Input−to−Output Test Voltage, Method A, V_{IORM} x 1.6 = V_{PR}, Type and Sample Test with t_m = 10 s, Partial Discharge < 5 pC	904	Vpeak
	Input−to−Output Test Voltage, Method B, V_{IORM} x 1.875 = V_{PR}, 100% Production Test with t_m = 1 s, Partial Discharge < 5 pC	1060	Vpeak
VIORM	Maximum Working Insulation Voltage	565	Vpeak
VIOTM	Highest Allowable Over−Voltage	4,000	Vpeak
	External Creepage	≥ 4	mm
	External Clearance	≥ 4	mm
DTI	Distance Through Insulation (Insulation Thickness)	≥ 0.4	mm
T_S	Case Temperature (Note 1)	150	°C
IS,INPUT	Input Current (Note 1)	200	mA
PS,OUTPUT	Output Power (Note 1)	300	mW
RIO	Insulation Resistance at T_S, V_{IO} = 500 V (Note 1)	> 10^9	Ω

1. Safety limit values – maximum values allowed in the event of a failure.

Table 2. ABSOLUTE MAXIMUM RATINGS (T_A = 25°C unless otherwise specified)

Symbol	Parameter	Value	Units
T_{STG}	Storage Temperature	−40 to +150	°C
T_{OPR}	Operating Temperature	−40 to +125	°C
T_J	Junction Temperature	−50 to +150	°C
T_{SOL}	Lead Solder Temperature (Refer to Reflow Temperature Profile)	260 for 10 sec	°C
EMITTER			
$I_{F(average)}$	Continuous Forward Current	20	mA
V_R	Reverse Input Voltage	6	V
PD_{LED}	Power Dissipation (Note 2)	40	mW
DETECTOR			
$I_{C(average)}$	Continuous Collector Current	30	mA
V_{CEO}	Collector−Emitter Voltage	75	V
V_{ECO}	Emitter−Collector Voltage	7	V
PD_C	Collector Power Dissipation (Note 2)	150	mW

Stresses exceeding those listed in the Maximum Ratings table may damage the device. If any of these limits are exceeded, device functionality should not be assumed, damage may occur and reliability may be affected.

2. Functional operation under these conditions is not implied. Permanent damage may occur if the device is subjected to conditions outside these ratings.

Table 3. ELECTRICAL CHARACTERISTICS

Apply over all recommended conditions (T_A = −40°C to +125°C unless otherwise specified). All typical values are measured at T_A = 25°C.

Symbol	Parameter	Conditions	Min.	Typ.	Max.	Units
V_F	Forward Voltage	I_F = 1 mA	1.0	1.35	1.8	V
$\Delta V_F / \Delta T_A$	Forward Voltage Coefficient	I_F = 1 mA		−1.6		mV/°C
I_R	Reverse Current	V_R = 6 V			10	μA
C_T	Terminal Capacitance	V = 0 V, f = 1 MHz		30		pF
BV_{CEO}	Collector−Emitter Breakdown Voltage	I_C = 0.5 mA, I_F = 0 mA	75	130		V
BV_{ECO}	Emitter−Collector Breakdown Voltage	I_E = 100 μA, I_F = 0 mA	7	12		V
I_{CEO}	Collector Dark Current	V_{CE} = 75 V, I_F = 0 mA, T_A = 25°C			100	nA
		V_{CE} = 50 V, I_F = 0 mA			50	μA
		V_{CE} = 5 V, I_F = 0 mA			30	μA
C_{CE}	Capacitance	V_{CE} = 0 V, f = 1 MHz		8		pF

Product parametric performance is indicated in the Electrical Characteristics for the listed test conditions, unless otherwise noted. Product performance may not be indicated by the Electrical Characteristics if operated under different conditions.

Table 4. TRANSFER CHARACTERISTICS

Apply over all recommended conditions (T_A = −40°C to +125°C unless otherwise specified). T_A = 25°C unless otherwise specified.

Symbol	Parameter	Device	Conditions	Min.	Typ.	Max.	Units
CTR_{CE}	Current Transfer Ratio (collector−emiiter)	FOD8802A	I_F = 1.0 mA, V_{CE} = 5 V @ T_A = 25°C	80	120	160	%
			I_F = 1.0 mA, V_{CE} = 5 V	35	120	230	
			I_F = 1.6 mA, V_{CE} = 5 V	40	125		
			I_F = 3.0 mA, V_{CE} = 5 V	45	138		
		FOD8802B	I_F = 1.0 mA, V_{CE} = 5 V @ T_A = 25°C	130	195	260	
			I_F = 1.0 mA, V_{CE} = 5 V	65	195	360	
			I_F = 1.6 mA, V_{CE} = 5 V	70	202		
			I_F = 3.0 mA, V_{CE} = 5 V	75	215		
		FOD8802C	I_F = 1.0 mA, V_{CE} = 5 V @ T_A = 25°C	200	300	400	
			I_F = 1.0 mA, V_{CE} = 5 V	100	300	560	
			I_F = 1.6 mA, V_{CE} = 5 V	110	312		
			I_F = 3.0 mA, V_{CE} = 5 V	115	330		
		FOD8802D	I_F = 1.0 mA, V_{CE} = 5 V @ T_A = 25°C	100		400	
			I_F = 1.0 mA, V_{CE} = 5 V	45		560	
			I_F = 1.6 mA, V_{CE} = 5 V	50			
			I_F = 3.0 mA, V_{CE} = 5 V	55			
$CTR_{CE(SAT)}$	Saturated Current Transfer Ratio (collector−emiiter)	FOD8802A	I_F = 1.0 mA, V_{CE} = 0.4 V @ T_A = 25°C	65	108	150	%
			I_F = 1.0 mA, V_{CE} = 0.4 V	30	108		
			I_F = 1.6 mA, V_{CE} = 0.4 V	25	104		
			I_F = 3.0 mA, V_{CE} = 0.4 V	20	92		
		FOD8802B	I_F = 1.0 mA, V_{CE} = 0.4 V @ T_A = 25°C	90	168	245	
			I_F = 1.0 mA, V_{CE} = 0.4 V	45	168		
			I_F = 1.6 mA, V_{CE} = 0.4 V	40	155		
			I_F = 3.0 mA, V_{CE} = 0.4 V	35	132		
		FOD8802C	I_F = 1.0 mA, V_{CE} = 0.4 V @ T_A = 25°C	140	238	380	
			I_F = 1.0 mA, V_{CE} = 0.4 V	75	238		
			I_F = 1.6 mA, V_{CE} = 0.4 V	65	215		
			I_F = 3.0 mA, V_{CE} = 0.4 V	55	177		
		FOD8802D	I_F = 1.0 mA, V_{CE} = 0.4 V @ T_A = 25°C	70		380	
			I_F = 1.0 mA, V_{CE} = 0.4 V	35			
			I_F = 1.6 mA, V_{CE} = 0.4 V	30			
			I_F = 3.0 mA, V_{CE} = 0.4 V	25			
$V_{CE(SAT)}$	Saturation voltage	FOD8802A	I_F = 1.0 mA, I_C = 0.3 mA		0.17	0.40	V
			I_F = 1.6 mA, I_C = 0.4 mA		0.16	0.40	
			I_F = 3.0 mA, I_C = 0.6 mA		0.15	0.40	
		FOD8802B	I_F = 1.0 mA, I_C = 0.45 mA		0.17	0.40	
			I_F = 1.6 mA, I_C = 0.6 mA		0.16	0.40	
			I_F = 3.0 mA, I_C = 1.0 mA		0.16	0.40	
		FOD8802C	I_F = 1.0 mA, I_C = 0.75 mA		0.18	0.40	
			I_F = 1.6 mA, I_C = 1.0 mA		0.17	0.40	
			I_F = 3.0 mA, I_C = 1.6 mA		0.17	0.40	
		FOD8802D	I_F = 1.0 mA, I_C = 0.45 mA			0.40	
			I_F = 1.6 mA, I_C = 0.60 mA			0.40	
			I_F = 3.0 mA, I_C = 1.00 mA			0.40	

Table 5. SWITCHING CHARACTERISTICS

Apply over all recommended conditions (T_A = −40°C to +125°C unless otherwise specified). All typical values are measured at T_A = 25°C.

Symbol	Parameter	Conditions	Min.	Typ.	Max.	Units
t_{ON}	Turn On Time	I_F = 1.6 mA, V_{CC} = 5 V, R_L = 0.75 kΩ	1	6	20	μs
		I_F = 1.6 mA, V_{CC} = 5 V, R_L = 4.7 kΩ		6		μs
t_{OFF}	Turn Off Time	I_F = 1.6 mA, V_{CC} = 5 V, R_L = 0.75 kΩ	1	6	20	μs
		I_F = 1.6 mA, V_{CC} = 5 V, R_L = 4.7 kΩ		40		μs
t_R	Output Rise Time (10% −90%)	I_F = 1.6 mA, V_{CC} = 5 V, R_L = 0.75 kΩ		6		μs
t_F	Output Fall Time (90% −10%)	I_F = 1.6 mA, V_{CC} = 5 V, R_L = 0.75 kΩ		7		μs
CM_H	Common Mode Rejection Voltage (Transient Immunity Output High)	I_F = 0 mA, V_{CC} = 5 V, R_L = 4.7kΩ VCM = 500 V (Note 3)		10		kV/μs
CM_L	Common Mode Rejection Voltage (Transient Immunity Output Low)	I_F = 1.6 mA, V_{CC} = 5 V, R_L = 4.7 kΩ VCM = 500 V (Note 3)		10		kV/μs

3. Common mode transient immunity at output high is the maximum tolerable positive dVcm/dt on the leading edge of the common mode impulse signal, Vcm, to assure that the output will remain high.

Table 6. ISOLATION CHARACTERISTICS

Symbol	Parameter	Conditions	Min	Typ	Max	Units
V_{ISO}	Input−Output Isolation Voltage	Freq = 60 Hz, t = 1.0 min, $I_{I-O} \le$ 10 μA (Notes 4, 5)	2,500			VAC_{RMS}
R_{ISO}	Isolation Resistance	V_{I-O} = 500 V (Note 4)	10^{11}			Ω
C_{ISO}	Isolation Capacitance	Frequency = 1 MHz		0.6		pF

4. Device is considered a two terminal device: Pins 1 and 2 are shorted together and Pins 3 and 4 are shorted together.
5. 2,500 VAC_{RMS} for 1 minute duration is equivalent to 3,000 VAC_{RMS} for 1 second duration.

TEST CIRCUIT

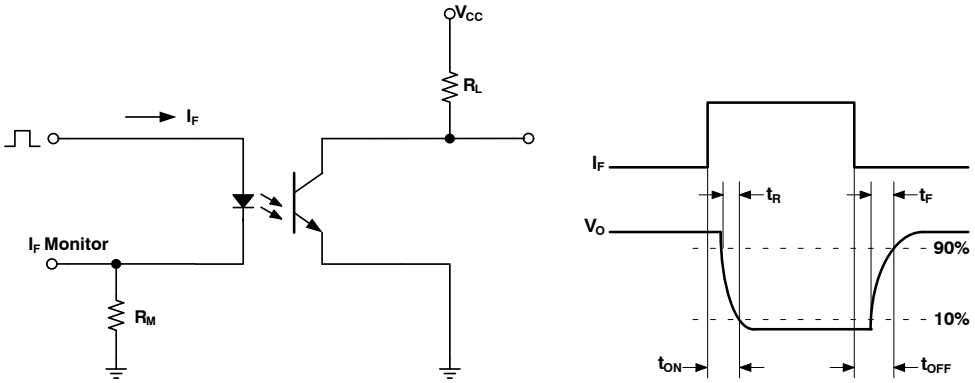

Figure 1. Switching Test Circuit and Waveform

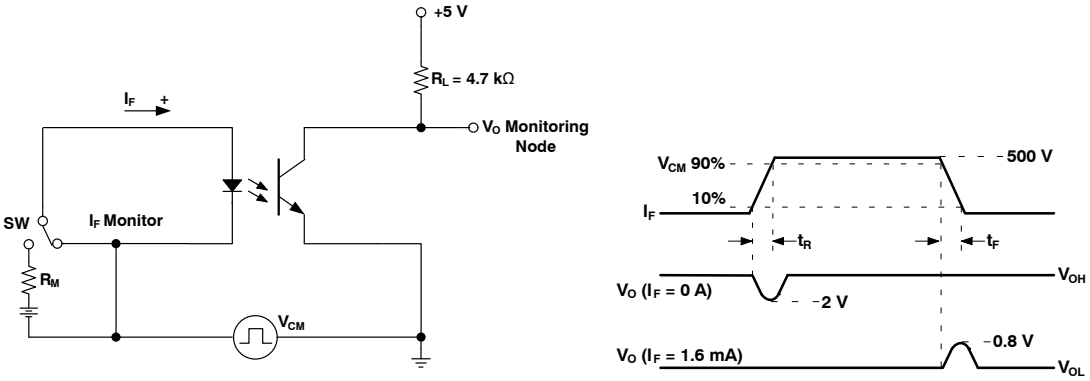

Figure 2. Test Circuit for Instantaneous Common−Mode Rejection Voltage

TYPICAL PERFORMANCE CHARACTERISTICS

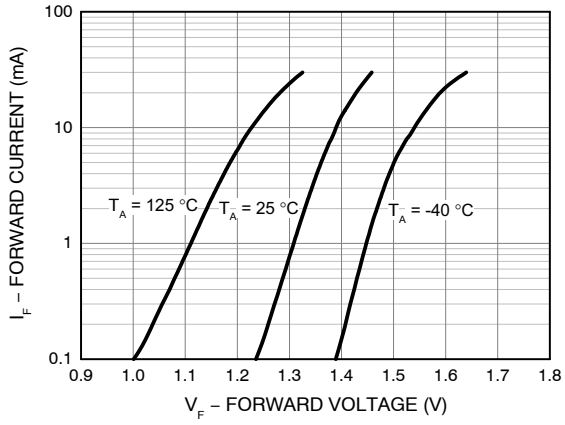

Figure 3. Forward Current vs. Forward Voltage

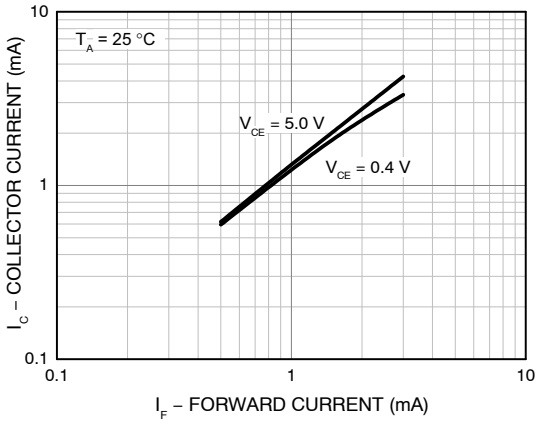

Figure 4. Collector Current vs. Forward Current

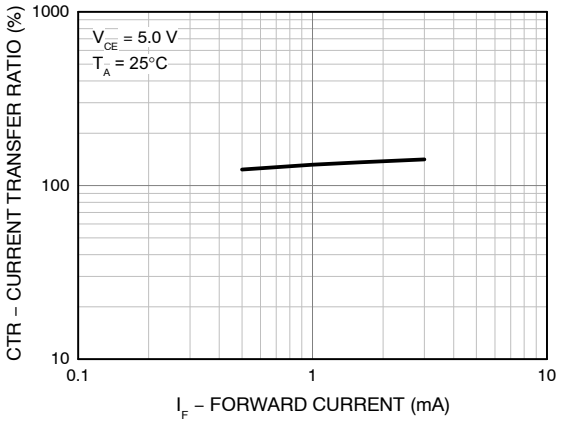

Figure 5. Current Transfer Ratio vs. Forward Current

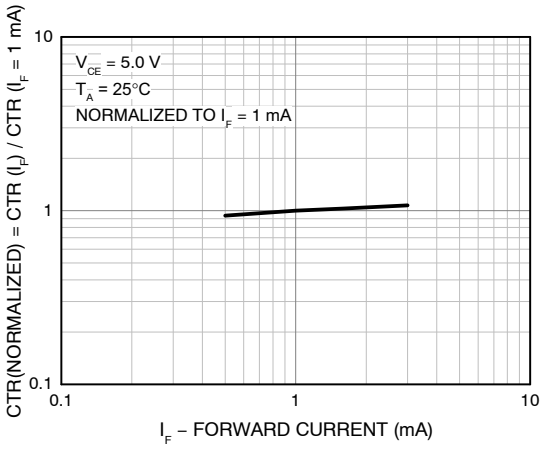

Figure 6. Normalized CTR vs. Forward Current

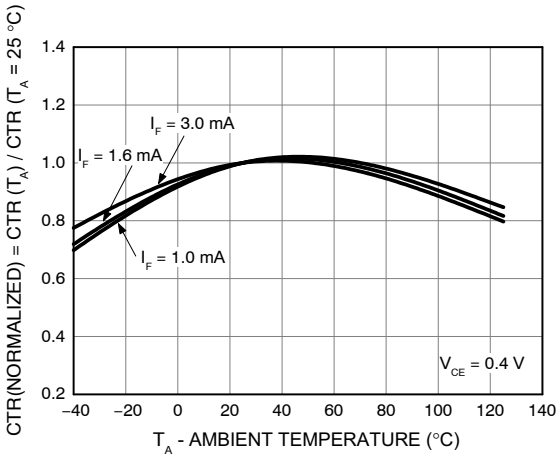

Figure 7. Normalized CTR vs. Ambient Temperature

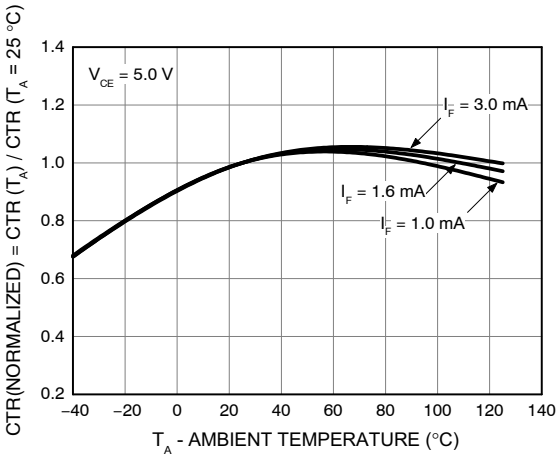

Figure 8. Normalized CTR vs. Ambient Temperature

TYPICAL PERFORMANCE CHARACTERISTICS (continued)

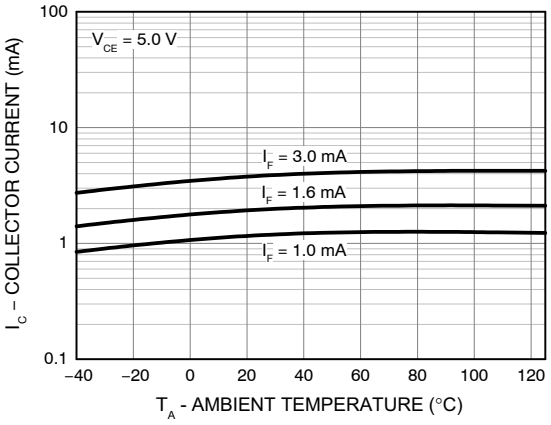

Figure 9. Collector Current vs. Ambient Temperature

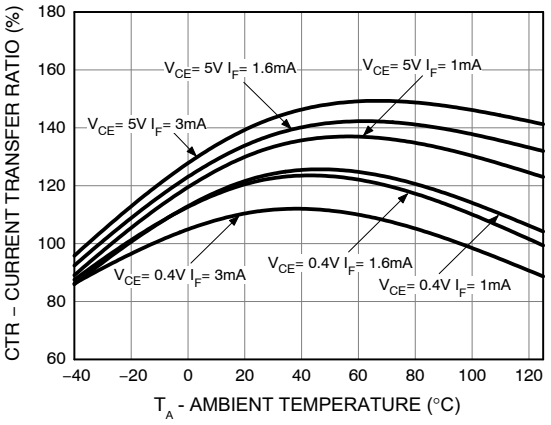

Figure 10. Current Transfer Ratio vs. Ambient Temperature

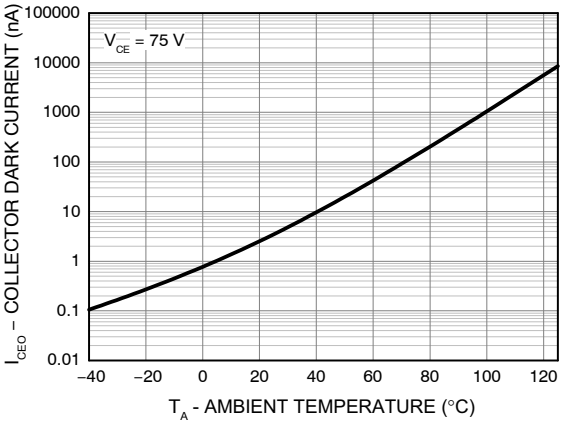

Figure 11. Collector Dark Current vs. Ambient Temperature

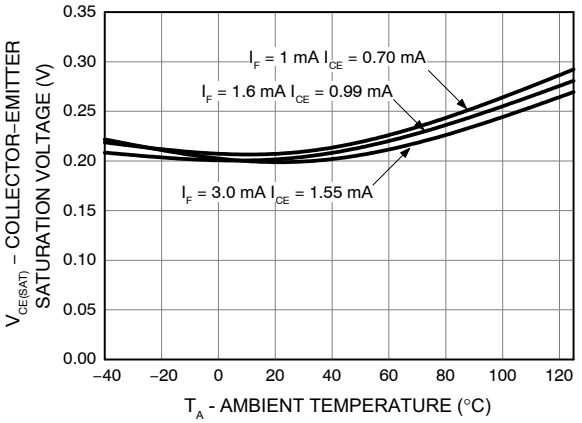

Figure 12. Collector−Emitter Saturation Voltage vs. Ambient Temperature

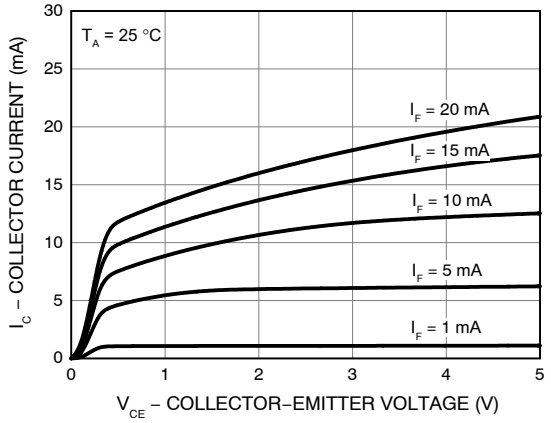

Figure 13. Collector Current vs. Collector−Emitter Voltage

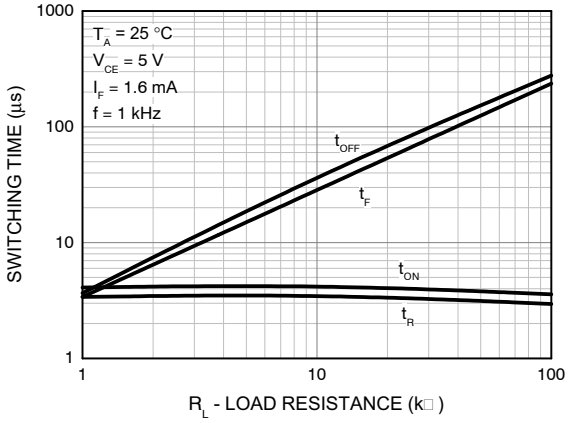

Figure 14. Switching Time vs. Load Resistance

REFLOW PROFILE

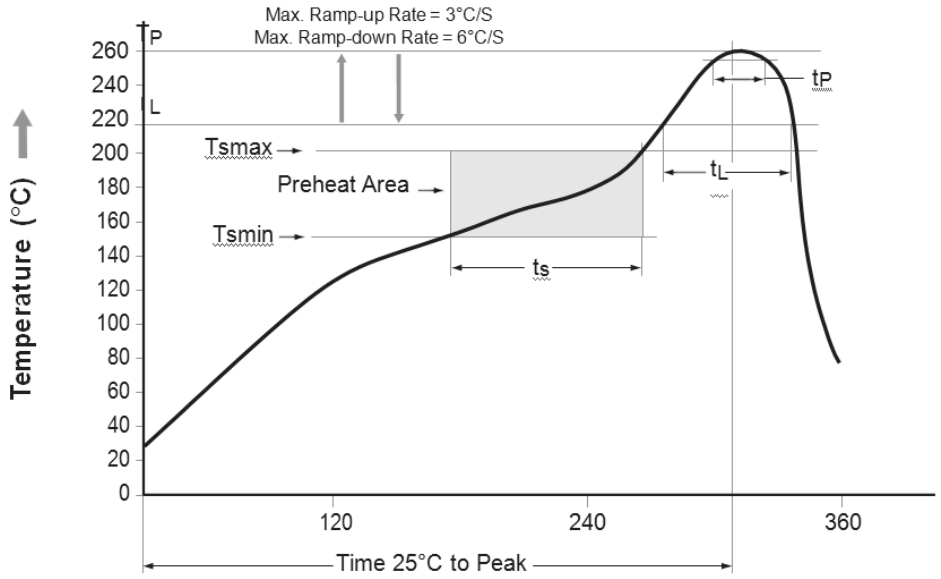

Figure 15. Reflow Profile

Profile Feature	Pb−Free Assembly Profile
Temperature Min. (Tsmin)	150°C
Temperature Max. (Tsmax)	200°C
Time (t_S) from (Tsmin to Tsmax)	60–120 seconds
Ramp−up Rate (t_L to t_P)	3°C/second max.
Liquidous Temperature (T_L)	217°C
Time (t_L) Maintained Above (T_L)	60–150 seconds
Peak Body Package Temperature	260°C +0°C / −5°C
Time (t_P) within 5°C of 260°C	30 seconds
Ramp−down Rate (T_P to T_L)	6°C/second max.
Time 25°C to Peak Temperature	8 minutes max.

ORDERING INFORMATION (Note 6)

Part Number	Package	Packing Method
FOD8802A	Small Outline 8−Pin	Tube (50 units per tube)
FOD8802AR2	Small Outline 8−Pin	Tape and Reel (2,500 units per reel)
FOD8802AV	Small Outline 8−Pin DIN EN/IEC60747−5−5 Option (pending approval)	Tube (50 units per tube)
FOD8802AR2V	Small Outline 8−Pin DIN EN/ IEC60747−5−5 Option (pending approval)	Tape and Reel (2,500 units per reel)

6. The product orderable part number system listed in this table also applies to the FOD8802A, FOD8802B, FOD8802C and FOD8802D products.

OptoHiT is a trademark of Semiconductor Components Industries, LLC (SCILLC) or its subsidiaries in the United States and/or other countries.

SOIC8
CASE 751DZ
ISSUE O

DATE 30 SEP 2016

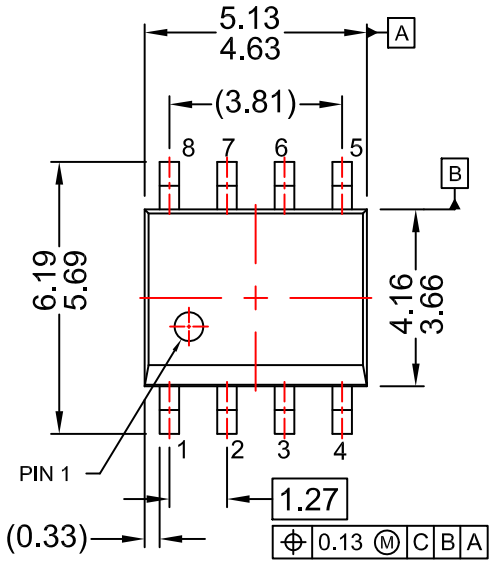

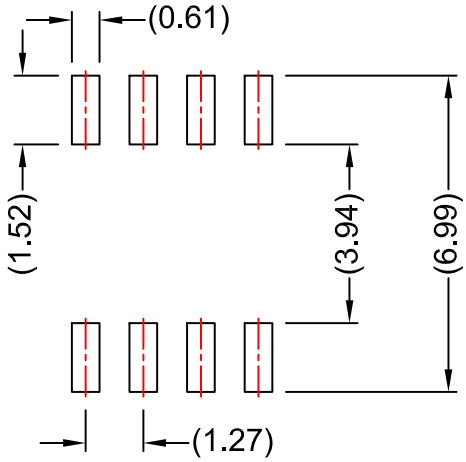

LAND PATTERN RECOMMENDATION

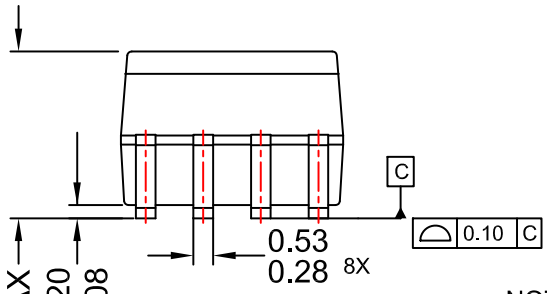

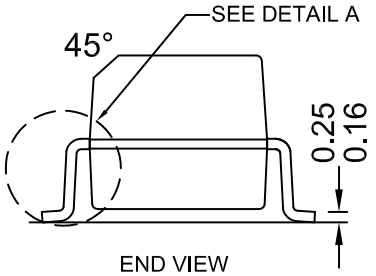

END VIEW

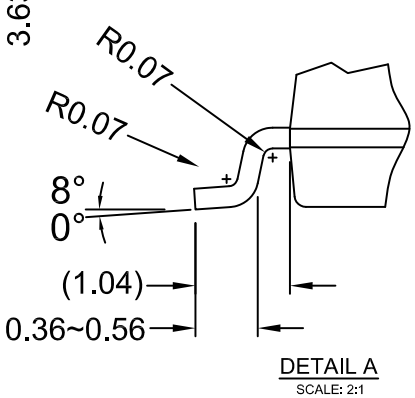

DETAIL A
SCALE: 2:1

NOTES:

A) NO STANDARD APPLIES TO THIS PACKAGE
B) ALL DIMENSIONS ARE IN MILLIMETERS.
C) DIMENSIONS DO NOT INCLUDE MOLD FLASH OR BURRS.
D) LANDPATTERN STANDARD: SOIC127P600X175-8M.

DOCUMENT NUMBER:	**98AON13733G**	Electronic versions are uncontrolled except when accessed directly from the Document Repository. Printed versions are uncontrolled except when stamped "CONTROLLED COPY" in red.	
DESCRIPTION:	**SOIC8**		**PAGE 1 OF 1**

ON Semiconductor and ON are trademarks of Semiconductor Components Industries, LLC dba ON Semiconductor or its subsidiaries in the United States and/or other countries. ON Semiconductor reserves the right to make changes without further notice to any products herein. ON Semiconductor makes no warranty, representation or guarantee regarding the suitability of its products for any particular purpose, nor does ON Semiconductor assume any liability arising out of the application or use of any product or circuit, and specifically disclaims any and all liability, including without limitation special, consequential or incidental damages. ON Semiconductor does not convey any license under its patent rights nor the rights of others.

© Semiconductor Components Industries, LLC, 2019

onsemi, , and other names, marks, and brands are registered and/or common law trademarks of Semiconductor Components Industries, LLC dba "**onsemi**" or its affiliates and/or subsidiaries in the United States and/or other countries. **onsemi** owns the rights to a number of patents, trademarks, copyrights, trade secrets, and other intellectual property. A listing of **onsemi**'s product/patent coverage may be accessed at www.onsemi.com/site/pdf/Patent−Marking.pdf. **onsemi** reserves the right to make changes at any time to any products or information herein, without notice. The information herein is provided "as−is" and **onsemi** makes no warranty, representation or guarantee regarding the accuracy of the information, product features, availability, functionality, or suitability of its products for any particular purpose, nor does **onsemi** assume any liability arising out of the application or use of any product or circuit, and specifically disclaims any and all liability, including without limitation special, consequential or incidental damages. Buyer is responsible for its products and applications using **onsemi** products, including compliance with all laws, regulations and safety requirements or standards, regardless of any support or applications information provided by **onsemi**. "Typical" parameters which may be provided in **onsemi** data sheets and/or specifications can and do vary in different applications and actual performance may vary over time. All operating parameters, including "Typicals" must be validated for each customer application by customer's technical experts. **onsemi** does not convey any license under any of its intellectual property rights nor the rights of others. **onsemi** products are not designed, intended, or authorized for use as a critical component in life support systems or any FDA Class 3 medical devices or medical devices with a same or similar classification in a foreign jurisdiction or any devices intended for implantation in the human body. Should Buyer purchase or use **onsemi** products for any such unintended or unauthorized application, Buyer shall indemnify and hold **onsemi** and its officers, employees, subsidiaries, affiliates, and distributors harmless against all claims, costs, damages, and expenses, and reasonable attorney fees arising out of, directly or indirectly, any claim of personal injury or death associated with such unintended or unauthorized use, even if such claim alleges that **onsemi** was negligent regarding the design or manufacture of the part. **onsemi** is an Equal Opportunity/Affirmative Action Employer. This literature is subject to all applicable copyright laws and is not for resale in any manner.

ADDITIONAL INFORMATION

TECHNICAL PUBLICATIONS:
Technical Library: www.onsemi.com/design/resources/technical−documentation
onsemi Website: www.onsemi.com

ONLINE SUPPORT: www.onsemi.com/support
For additional information, please contact your local Sales Representative at www.onsemi.com/support/sales