5-Pin Mini Flat Package High Speed Transistor Optocoupler

FODM452, FODM453

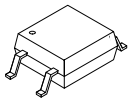

MFP5 4.1X4.4, 2.54P
CASE 100AM

Description

The FODM452 and FODM453 optocouplers consist of an AlGaAs LED optically coupled to a high speed photo−detector transistor. The devices are housed in a compact 5−pin mini flat package for optimum mounting density.

The FODM453 features a high CMR rating for optimum common mode transient immunity.

Features

- Compact 5−pin Mini Flat Package
- High Speed − 1 MBit/s
- Superior CMR − 15 kV/μs at V_{CM} = 1500 V (FODM453)
- Performance Guaranteed over Temperature (0 – 70°C)
- U.L. Recognized (File # E90700)
- VDE0884 Recognized (File # 136480)
  – Ordering Option V, e.g., FODM452V
- 260°C Reflow Capability for Pb−free Assembly
- These are Pb−Free Devices

Applications

- Line Receivers
- Pulse Transformer Replacement
- Output Interface to CMOS−LSTTL−TTL
- Wide Bandwidth Analog Coupling

MARKING DIAGRAM

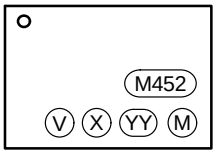

M45x = Device Number (x = 2, 3)
V = DIN EN/IEC60747−5−5 Mark (Note: Only Appears on Parts Ordered with VDE Option – See Order Entry Table)
X = One Digit Year Code, e.g., ‘7’
YY = ‘Two Digit Work Week Ranging from ‘01’ to ‘53’
M = Assembly Package Code

FUNCTIONAL SCHEMATIC

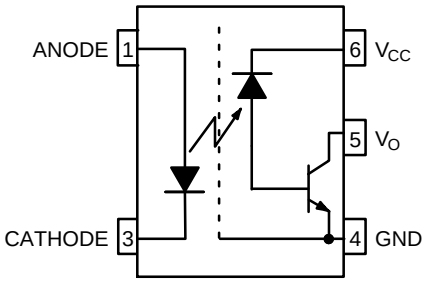

TRUTH TABLE

LED	Output
Off	High
On	Low

ORDERING INFORMATION

See detailed ordering and shipping information on page 10 of this data sheet.

© Semiconductor Components Industries, LLC, 2003

PIN DEFINITIONS

Number	Name	Function Description
1	ANODE	Anode
3	CATHODE	Cathode
4	GND	Output Ground
5	V_O	Output Voltage
6	V_{CC}	Output Supply Voltage

SAFETY AND INSULATION RATINGS FOR MINI−FLAT PACKAGE (SO5 PIN)

(As per DIN EN/IEC60747−5−5. This optocoupler is suitable for “safe electrical insulation” only within the safety limit data. Compliance with the safety ratings shall be ensured by means of protective circuits.)

Symbol	Parameter	Min	Typ	Max	Unit
	Installation Classifications per DIN VDE 0110/1.89 Table 1	−	−	−	
	For Rated Main Voltage <150 Vrms	−	I−IV	−	
	For Rated Main Voltage <300 Vrms	−	I−III	−	
	Climatic Classification	−	40/85/21	−	
	Pollution Degree (DIN VDE 0110/1.89)	−	2	−	
CTI	Comparative Tracking Index	175	−	−	
V_{PR}	Input to Output Test Voltage, Method b, VIORM x 1.875 = V_{PR}, 100% Production Test with t_m = 1 s, Partial Discharge <5 pC	1060	−	−	
V_{PR}	Input to Output Test Voltage, Method a, VIORM x 1.5 = V_{PR}, Type and Sample Test with t_m = 60 s, Partial Discharge <5 pC	848	−	−	
V_{IORM}	Max Working Insulation Voltage	565	−	−	V_{peak}
V_{IOTM}	Highest Allowable Over Voltage	4000	−	−	V_{peak}
	External Creepage	5.0	−	−	mm
	External Clearance	5.0	−	−	mm
	Insulation thickness	0.5	−	−	mm
T_{Case}	Safety Limit Values, Maximum Values Allowed in the Event of a Failure, Case Temperature	150	−	−	°C
R_{IO}	Insulation Resistance at T_S, V_{IO} = 500 V	10^9	−	−	Ω

MAXIMUM RATINGS (T_A = 25°C unless otherwise noted)

Symbol	Parameter	Rating	Unit
T_{STG}	Storage Temperature	−40 to +125	°C
T_{OPR}	Operating Temperature	−40 to +85	°C

EMITTER

I_F (avg)	DC/Average Forward Input Current	25	mA
I_F (pk)	Peak Forward Input Current (50% Duty Cycle, 1 ms P.W.)	50	mA
I_F (trans)	Peak Transient Input Current (≤1 μs P.W., 300 pps)	1.0	A
V_R	Reverse Input Voltage	5	V
P_D	Input Power Dissipation (No Derating Required over Specified Operating Temp Range)	45	mW

DETECTOR

I_O (avg)	Average Output Current	8	mA
I_O (pk)	Peak Output Current	16	mA
V_{CC}	Supply Voltage	−0.5 to 30	V
V_O	Output Voltage	−0.5 to 20	V
P_D	Output Power Dissipation (No Derating Required over Specified Operating Temp Range)	100	mW

Stresses exceeding those listed in the Maximum Ratings table may damage the device. If any of these limits are exceeded, device functionality should not be assumed, damage may occur and reliability may be affected.

ELECTRICAL CHARACTERISTICS (T_A = 0 to 70°C unless otherwise noted)

Symbol	Parameter	Test Condition	Device	Min	Typ*	Max	Unit
INDIVIDUAL COMPONENT CHARACTERISTICS							
EMITTER							
V_F	Input Forward Voltage	I_F = 16 mA, T_A = 25°C		–	1.60	1.7	V
		I_F = 16 mA		–	–	1.8	
B_{VR}	Input Reverse Breakdown Voltage	I_R = 10 μA		5.0	–	–	V
$\Delta V_F/\Delta T_A$	Temperature Coefficient of Forward Voltage	I_F = 16 mA		–	−1.8	–	mV/°C
DETECTOR							
I_{OH}	Logic High Output Current	I_F = 0 mA, V_O = V_{CC} = 5.5 V, T_A = 25°C		–	.001	0.5	μA
		I_F = 0 mA, V_O = V_{CC} = 15 V, T_A = 25°C		–	.001	1	
		I_F = 0 mA, V_O = V_{CC} = 15 V		–	–	50	
I_{CCL}	Logic Low Supply Current	I_F = 16 mA, V_O = Open, V_{CC} = 15 V		–	100	200	μA
I_{CCH}	Logic high Supply Current	I_F = 0 mA, V_O = Open, V_{CC} = 15 V, T_A = 25°C		–	0.05	1	μA
		I_F = 0 mA, V_O = Open, V_{CC} = 15 V		–	–	2	
TRANSFER CHARACTERISTICS							
COUPLED							
CTR	Current Transfer Ratio (Note 1)	I_F = 16 mA, V_{CC} = 4.5 V; T_A = 25°C, V_{OL} = 0.4 V		20	–	50	%
		I_F = 16 mA, V_{CC} = 4.5 V; V_{OL} = 0.5 V		15	–	–	
V_{OL}	Logic LOW Output Voltage	I_F = 16 mA, I_O = 3 mA, V_{CC} = 4.5 V, T_A = 25°C		–	–	0.4	V
		I_F = 16 mA, I_O = 2.4 mA, V_{CC} = 4.5 V		–	–	0.5	
SWITCHING CHARACTERISTICS (V_{CC} = 5 V)							
T_{PHL}	Propagation Delay Time to Logic LOW	R_L = 1.9 kΩ, I_F = 16 mA, T_A = 25°C (Note 2) (Figure 9)		–	0.40	0.8	μs
		R_L = 1.9 kΩ, I_F = 16 mA (Note 2) (Figure 9)		–	–	1.0	μs
T_{PLH}	Propagation Delay Time to Logic HIGH	R_L = 1.9 kΩ, I_F = 16 mA, T_A = 25°C (Note 2) (Figure 9)		–	0.35	0.8	μs
		R_L = 1.9 kΩ, I_F = 16 mA (Note 2) (Figure 9)		–	–	1.0	μs
$\|CM_H\|$	Common Mode Transient Immunity at Logic HIGH	I_F = 0 mA, V_{CM} = 10 V_{P-P}, R_L = 1.9 kΩ, T_A = 25°C (Note 3) (Figure 10)	FODM452	5	15	–	KV/μs
		I_F = 0 mA, V_{CM} = 1500 V_{P-P}, R_L = 1.9 kΩ T_A = 25°C (Note 3) (Figure 10)	FODM453	15	40	–	KV/μs
$\|CM_L\|$	Common Mode Transient Immunity at Logic LOW	I_F = 16 mA, V_{CM} = 10 V_{P-P}, R_L = 1.9 kΩ, T_A = 25°C (Note 3) (Figure 10)	FODM452	5	15	–	KV/μs
		I_F = 16 mA, V_{CM} = 1500 V_{P-P}, R_L = 1.9 kΩ, T_A = 25°C (Note 3) (Figure 10)	FODM453	15	40	–	KV/μs
BW	Bandwidth	R_L = 100 Ω		–	3	–	MHz
ISOLATION CHARACTERISTICS							
V_{ISO}	Withstand Insulation Test Voltage	RH ≤ 50%, T_A = 25°C, t = 1 min. (Note 4)		3750	–	–	V_{RMS}
C_{I-O}	Capacitance (Input to Output)	f = 1 MHz (Note 4)		–	0.2	–	pF

Product parametric performance is indicated in the Electrical Characteristics for the listed test conditions, unless otherwise noted. Product performance may not be indicated by the Electrical Characteristics if operated under different conditions.

*All Typicals at T_A = 25°C

1. Current Transfer Ratio is defined as a ratio of output collector current, I_O, to the forward LED input current, I_F, times 100%.
2. The 1.9 kΩ load represents 1 TTL unit load of 1.6 mA and 5.6 kΩ pull−up resistor.
3. Common mode transient immunity in logic high level is the maximum tolerable (positive) dV_{cm}/dt on the leading edge of the common mode pulse signal V_{CM}, to assure that the output will remain in a logic high state (i.e., V_O > 2.0 V). Common mode transient immunity in logic low level is the maximum tolerable (negative) dV_{cm}/dt on the trailing edge of the common mode pulse signal, V_{CM}, to assure that the output will remain in a logic low state (i.e., V_O < 0.8 V).
4. Device is considered a two terminal device: Pins 1, and 3 are shorted together and Pins 4, 5, and 6 are shorted together.

TYPICAL PERFORMANCE CURVES

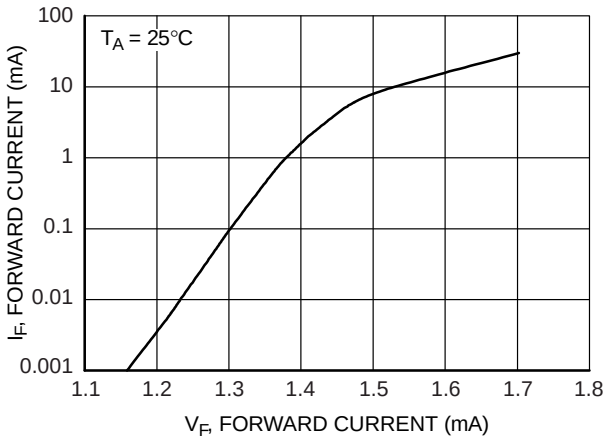

Figure 1. Input Forward Current vs Forward Voltage

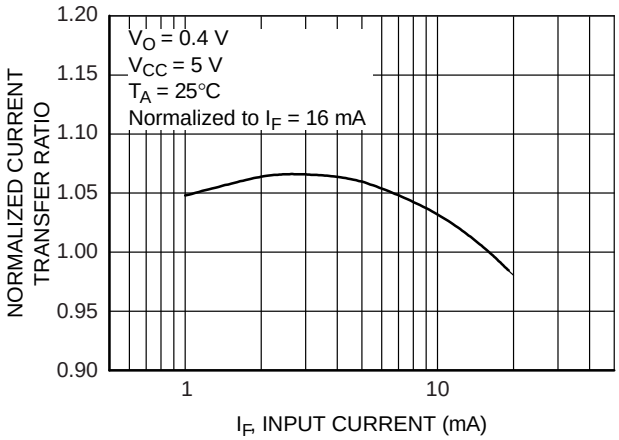

Figure 2. Normalized Current Transfer Ratio vs. Input Current

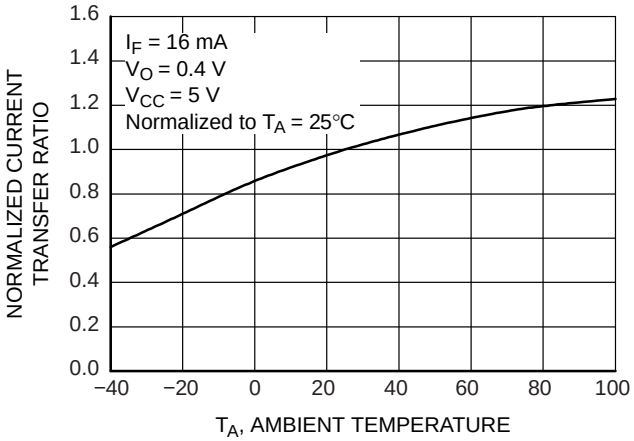

Figure 3. Normalized Current Transfer Ratio vs. Ambient Temperature

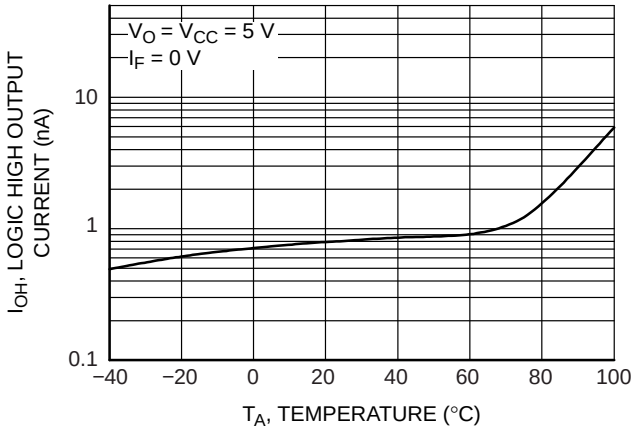

Figure 4. Logic High Output Current vs. Ambient Temperature

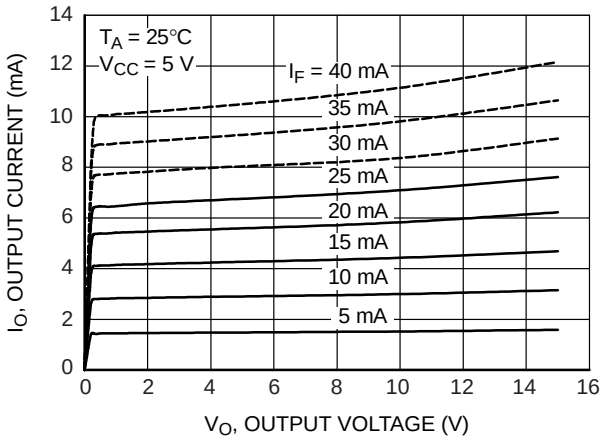

Figure 5. DC and Pulsed Transfer Characteristics

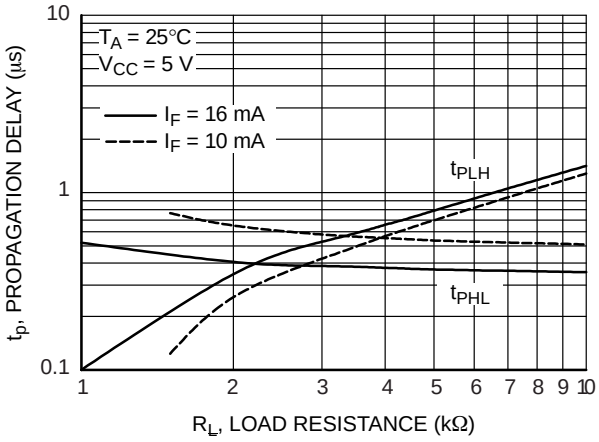

Figure 6. Propagation Delay vs. Load Resistance

TYPICAL PERFORMANCE CURVES (Continued)

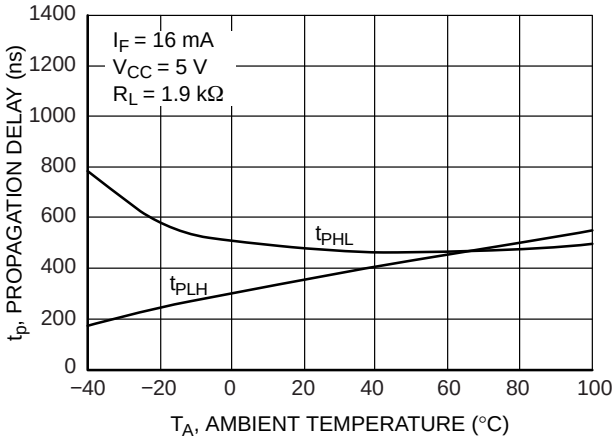

Figure 7. Propagation Delay vs. Ambient Temperature

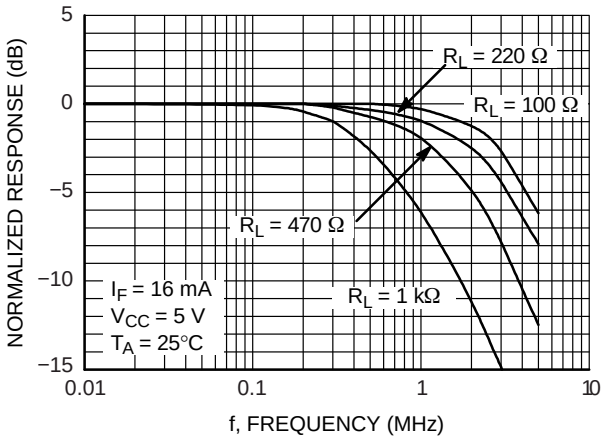

Figure 8. Frequency Response

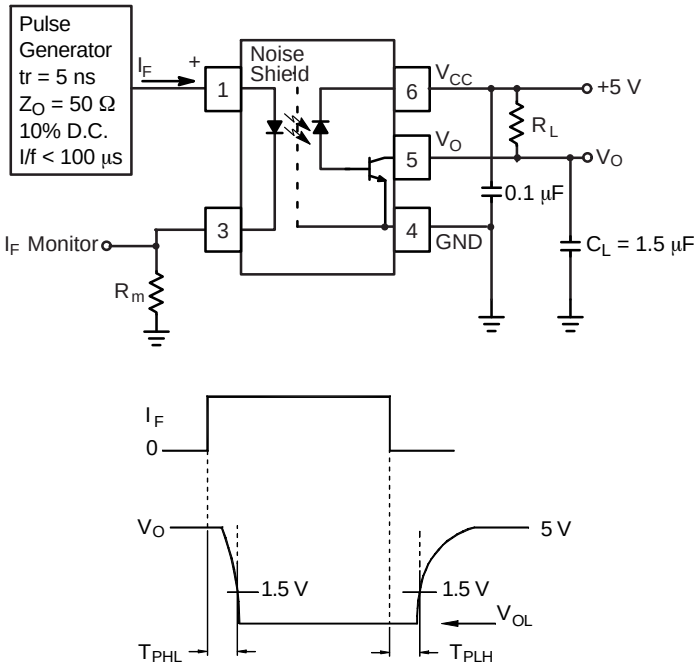

Figure 9. Switching Time Test Circuit

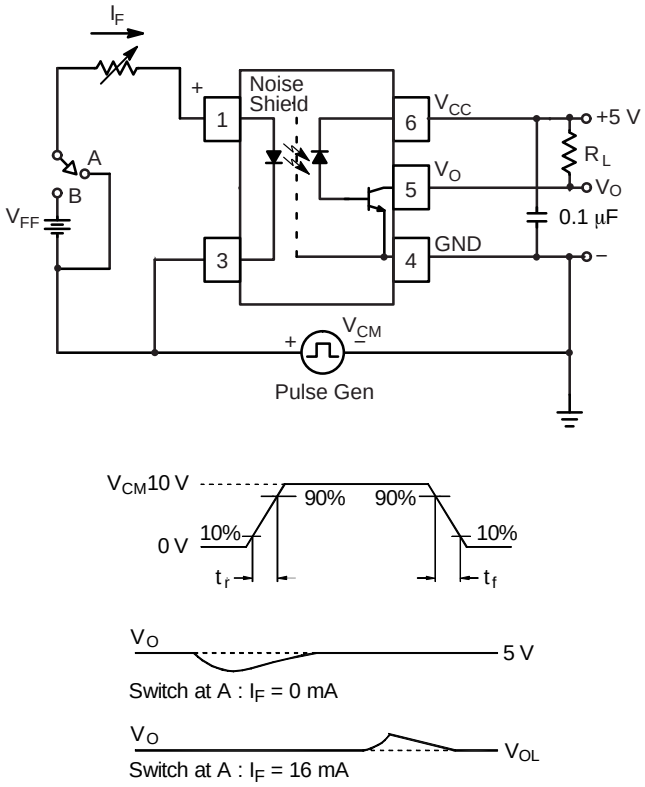

Figure 10. Common Mode Immunity Test Circuit

FOOTPRINT DRAWING FOR PCB LAYOUT

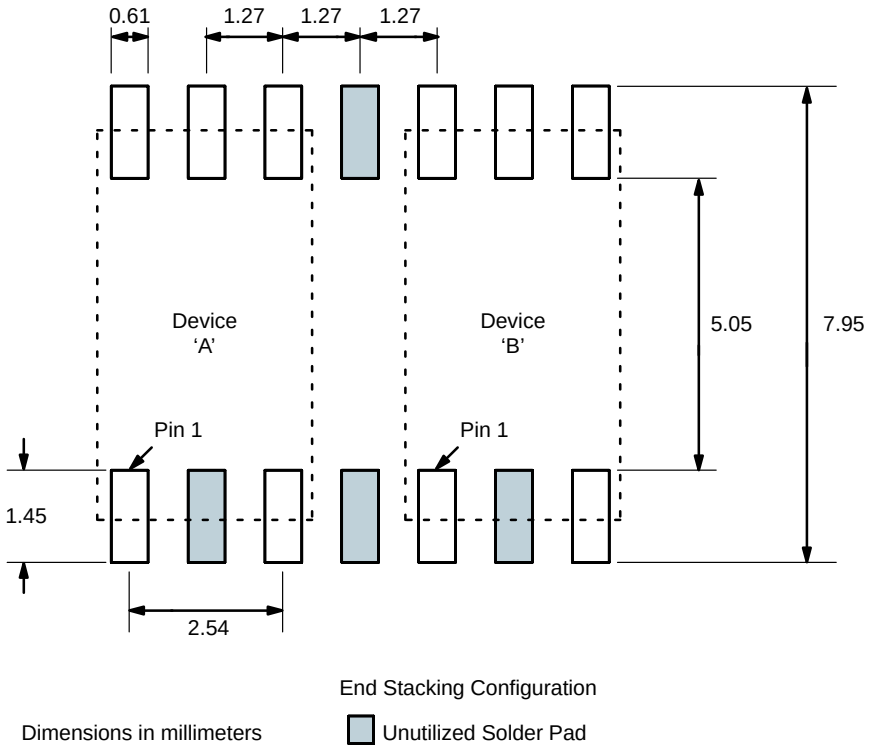

Figure 11. Footprint Drawing for PCB Layout

REFLOW PROFILE

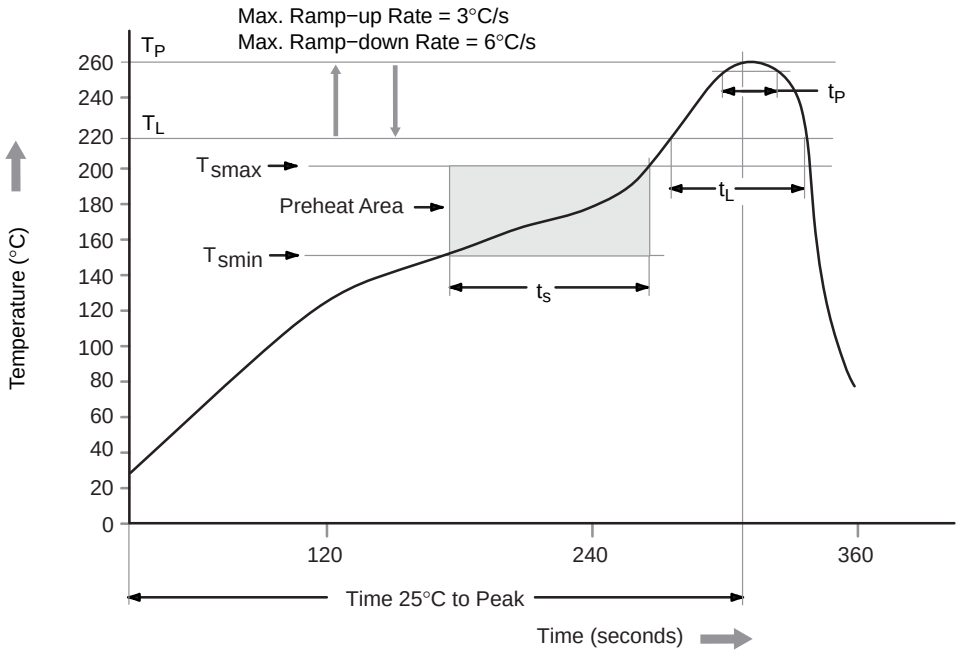

Figure 12. Reflow Profile

Table 1. REFLOW PROFILE

Profile Feature	Pb−Free Assembly Profile
Temperature Minimum (T_{smin})	150°C
Temperature Maximum (T_{smax})	200°C
Time (t_S) from (T_{smin} to T_{smax})	60 – 120 seconds
Ramp−up Rate (t_L to t_P)	3°C/second max.
Liquidous Temperature (T_L)	217°C
Time (t_L) Maintained Above (T_L)	60 – 150 seconds
Peak Body Package Temperature	260°C +0°C / –5°C
Time (t_P) within 5°C of 260°C	30 seconds
Ramp−down Rate (T_P to T_L)	6°C/second max.
Time 25°C to Peak Temperature	8 minutes max.

ORDERING INFORMATION

Part Number	Package	Shipping†
FODM452	MFP5 4.1X4.4, 2.54P (Pb−Free)	100 Units / Tube
FODM452R2	MFP5 4.1X4.4, 2.54P (Pb−Free)	2500 / Tape & Reel
FODM452V	MFP5 4.1X4.4, 2.54P IEC60747−5−2 (Pb−Free)	100 Units / Tube
FODM452R2V	MFP5 4.1X4.4, 2.54P IEC60747−5−2 (Pb−Free)	2500 / Tape & Reel
FODM453	MFP5 4.1X4.4, 2.54P (Pb−Free)	100 Units / Tube
FODM453R2	MFP5 4.1X4.4, 2.54P (Pb−Free)	2500 / Tape & Reel
FODM453V	MFP5 4.1X4.4, 2.54P IEC60747−5−2 (Pb−Free)	100 Units / Tube
FODM453R2V	MFP5 4.1X4.4, 2.54P IEC60747−5−2 (Pb−Free)	2500 / Tape & Reel

†For information on tape and reel specifications, including part orientation and tape sizes, please refer to our Tape and Reel Packaging Specifications Brochure, BRD8011/D.

MFP5 4.1X4.4, 2.54P
CASE 100AM
ISSUE O

DATE 31 AUG 2016

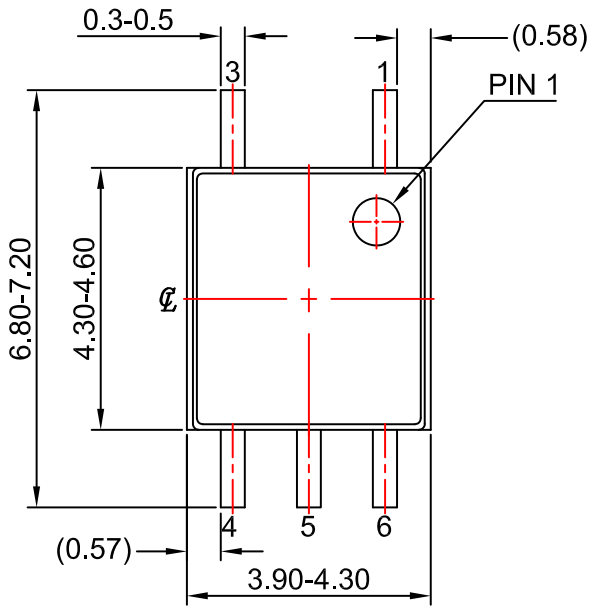

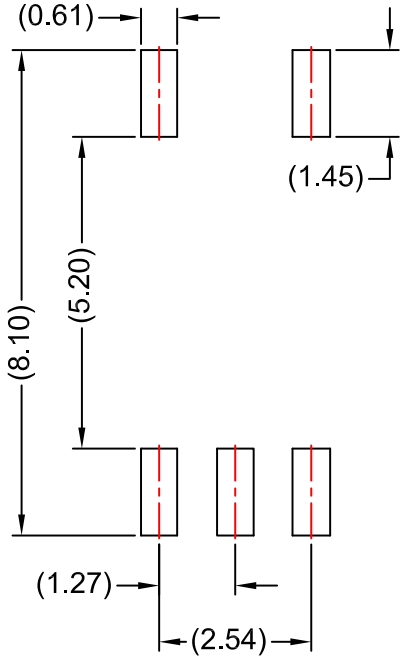

LAND PATTERN RECOMMENDATION

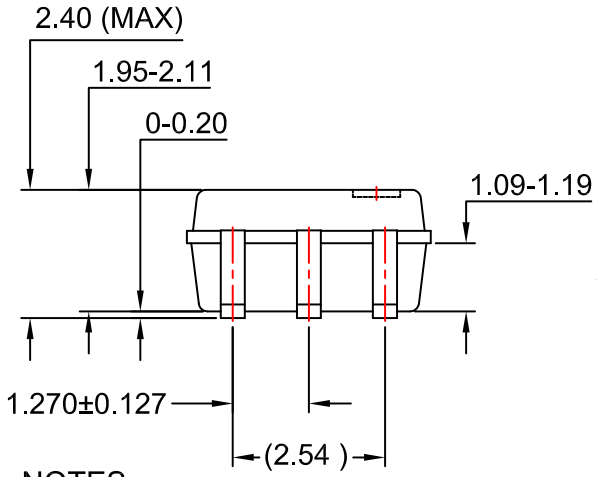

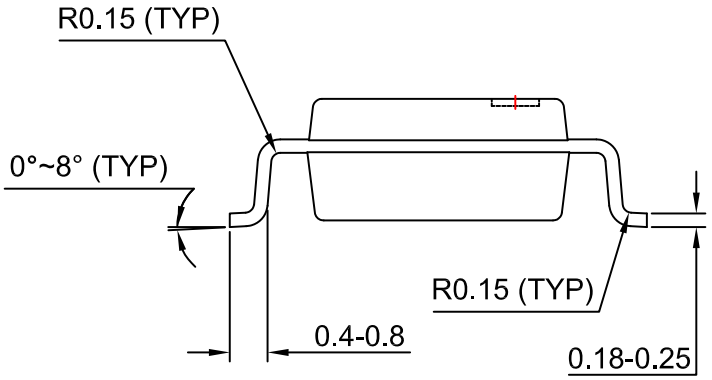

NOTES:

A) NO STANDARD APPLIES TO THIS PACKAGE

B) ALL DIMENSIONS ARE IN MILLIMETERS.

C) DIMENSIONS ARE EXCLUSIVE OF BURRS, MOLD FLASH, AND TIE BAR EXTRUSION

DOCUMENT NUMBER:	**98AON13486G**	Electronic versions are uncontrolled except when accessed directly from the Document Repository. Printed versions are uncontrolled except when stamped "CONTROLLED COPY" in red.
DESCRIPTION:	**MFP5 4.1X4.4, 2.54P**	**PAGE 1 OF 1**

onsemi and onsemi are trademarks of Semiconductor Components Industries, LLC dba **onsemi** or its subsidiaries in the United States and/or other countries. **onsemi** reserves the right to make changes without further notice to any products herein. **onsemi** makes no warranty, representation or guarantee regarding the suitability of its products for any particular purpose, nor does **onsemi** assume any liability arising out of the application or use of any product or circuit, and specifically disclaims any and all liability, including without limitation special, consequential or incidental damages. **onsemi** does not convey any license under its patent rights nor the rights of others.

onsemi, , and other names, marks, and brands are registered and/or common law trademarks of Semiconductor Components Industries, LLC dba "**onsemi**" or its affiliates and/or subsidiaries in the United States and/or other countries. **onsemi** owns the rights to a number of patents, trademarks, copyrights, trade secrets, and other intellectual property. A listing of **onsemi**'s product/patent coverage may be accessed at www.onsemi.com/site/pdf/Patent−Marking.pdf. **onsemi** reserves the right to make changes at any time to any products or information herein, without notice. The information herein is provided "as−is" and **onsemi** makes no warranty, representation or guarantee regarding the accuracy of the information, product features, availability, functionality, or suitability of its products for any particular purpose, nor does **onsemi** assume any liability arising out of the application or use of any product or circuit, and specifically disclaims any and all liability, including without limitation special, consequential or incidental damages. Buyer is responsible for its products and applications using **onsemi** products, including compliance with all laws, regulations and safety requirements or standards, regardless of any support or applications information provided by **onsemi**. "Typical" parameters which may be provided in **onsemi** data sheets and/or specifications can and do vary in different applications and actual performance may vary over time. All operating parameters, including "Typicals" must be validated for each customer application by customer's technical experts. **onsemi** does not convey any license under any of its intellectual property rights nor the rights of others. **onsemi** products are not designed, intended, or authorized for use as a critical component in life support systems or any FDA Class 3 medical devices or medical devices with a same or similar classification in a foreign jurisdiction or any devices intended for implantation in the human body. Should Buyer purchase or use **onsemi** products for any such unintended or unauthorized application, Buyer shall indemnify and hold **onsemi** and its officers, employees, subsidiaries, affiliates, and distributors harmless against all claims, costs, damages, and expenses, and reasonable attorney fees arising out of, directly or indirectly, any claim of personal injury or death associated with such unintended or unauthorized use, even if such claim alleges that **onsemi** was negligent regarding the design or manufacture of the part. **onsemi** is an Equal Opportunity/Affirmative Action Employer. This literature is subject to all applicable copyright laws and is not for resale in any manner.

ADDITIONAL INFORMATION

TECHNICAL PUBLICATIONS:
Technical Library: www.onsemi.com/design/resources/technical−documentation
onsemi Website: www.onsemi.com

ONLINE SUPPORT: www.onsemi.com/support
For additional information, please contact your local Sales Representative at www.onsemi.com/support/sales