

Is Now Part of



ON Semiconductor®

To learn more about ON Semiconductor, please visit our website at
www.onsemi.com

Please note: As part of the Fairchild Semiconductor integration, some of the Fairchild orderable part numbers will need to change in order to meet ON Semiconductor's system requirements. Since the ON Semiconductor product management systems do not have the ability to manage part nomenclature that utilizes an underscore (_), the underscore (_) in the Fairchild part numbers will be changed to a dash (-). This document may contain device numbers with an underscore (_). Please check the ON Semiconductor website to verify the updated device numbers. The most current and up-to-date ordering information can be found at www.onsemi.com. Please email any questions regarding the system integration to Fairchild_questions@onsemi.com.

ON Semiconductor and the ON Semiconductor logo are trademarks of Semiconductor Components Industries, LLC dba ON Semiconductor or its subsidiaries in the United States and/or other countries. ON Semiconductor owns the rights to a number of patents, trademarks, copyrights, trade secrets, and other intellectual property. A listing of ON Semiconductor's product/patent coverage may be accessed at www.onsemi.com/site/pdf/Patent-Marking.pdf. ON Semiconductor reserves the right to make changes without further notice to any products herein. ON Semiconductor makes no warranty, representation or guarantee regarding the suitability of its products for any particular purpose, nor does ON Semiconductor assume any liability arising out of the application or use of any product or circuit, and specifically disclaims any and all liability, including without limitation special, consequential or incidental damages. Buyer is responsible for its products and applications using ON Semiconductor products, including compliance with all laws, regulations and safety requirements or standards, regardless of any support or applications information provided by ON Semiconductor. "Typical" parameters which may be provided in ON Semiconductor data sheets and/or specifications can and do vary in different applications and actual performance may vary over time. All operating parameters, including "Typicals" must be validated for each customer application by customer's technical experts. ON Semiconductor does not convey any license under its patent rights nor the rights of others. ON Semiconductor products are not designed, intended, or authorized for use as a critical component in life support systems or any FDA Class 3 medical devices or medical devices with a same or similar classification in a foreign jurisdiction or any devices intended for implantation in the human body. Should Buyer purchase or use ON Semiconductor products for any such unintended or unauthorized application, Buyer shall indemnify and hold ON Semiconductor and its officers, employees, subsidiaries, affiliates, and distributors harmless against all claims, costs, damages, and expenses, and reasonable attorney fees arising out of, directly or indirectly, any claim of personal injury or death associated with such unintended or unauthorized use, even if such claim alleges that ON Semiconductor was negligent regarding the design or manufacture of the part. ON Semiconductor is an Equal Opportunity/Affirmative Action Employer. This literature is subject to all applicable copyright laws and is not for resale in any manner.

January 2016

FPF1013 / FPF1014
IntelliMAX™ 1 V-Rated Advanced Load Management Products

Features

- 0.8 V to 1.8 V Input Voltage Range
- Typical $R_{DS(ON)}$ = 17 mΩ at V_{ON} - V_{IN} = 2.0 V
- Output Discharge Function
- Internal Pull-Down at ON Pin
- Accurate Slew Rate Controlled Turn-on Time
- Low < 1 µA Quiescent Current
- ESD Protected, above 8 kV HBM, 2 kV CDM

Applications

- PDAs
- Cell Phones
- GPS Devices
- MP3 Players
- Digital Cameras
- Notebook Computers

Description

The FPF1013/14 IntelliMAX™ advanced slew rate load switch offers very low operating voltage and a 17 mΩ N-channel MOSFET that supports an input voltage up to 2.0 V. This slew-rate device control the switch turn-on and prevent excessive inrush current from supply rails. The input voltage range operates from 0.8 V to 1.8 V to fulfill today's lowest mobile device supply requirements. Switch control is via a logic input (ON) capable of interfacing directly with low-voltage control signals.

The FPF1014 has an on-chip pull-down, allowing for quick and controlled output discharge when the switch is turned off. The FPF10131/4 is available in a space-saving six-lead 1 mm x 1.5 mm Wafer-Level Chip-Scale Package (WLCSP).



Figure 1. WLCSP Bump Configuration (Top & Bottom)

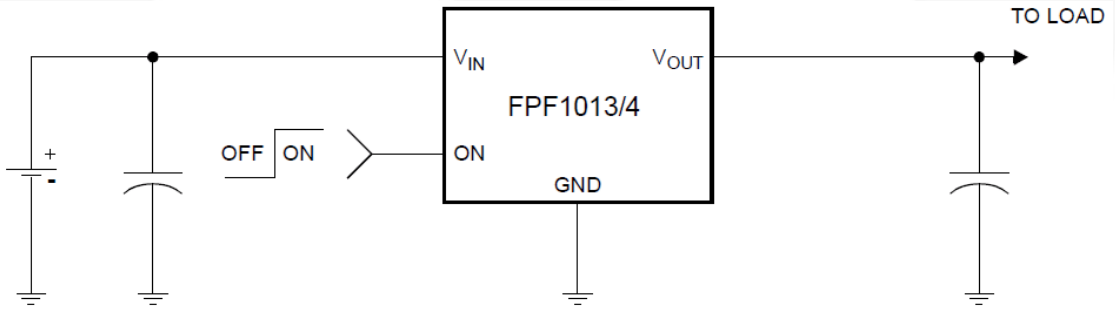

Figure 2. Typical Application

Ordering Information

Part Number	Switch	Turn-On Time	Output Discharge	ON Pin Activity	Package
FPF1013	17 mΩ, NMOS	43 µs	N/A	Active HIGH	WLCSP 950 µm x 1450 µm, (*see Figure 24*)
FPF1014	17 mΩ, NMOS	43 µs	60 Ω	Active HIGH	

© 2009 Fairchild Semiconductor Corporation

Functional Block Diagram

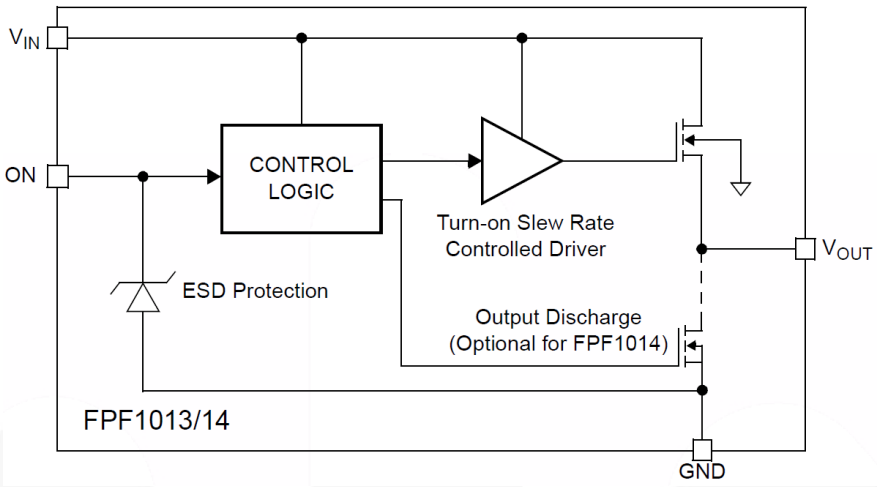

Figure 3. Functional Block Diagram

Pin Configuration

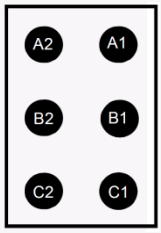

Figure 4. Pin Configuration

Pin Definitions

Pin	Name	Description
A2, B2	V_{IN}	Supply Input: Input to the power switch and the supply voltage for the IC
C2	ON	ON Control Input
A1, B1	V_{OUT}	Switch Output: Output of the power switch
C1	GND	Ground

© 2009 Fairchild Semiconductor Corporation

Absolute Maximum Ratings

Stresses exceeding the absolute maximum ratings may damage the device. The device may not function or be operable above the recommended operating conditions and stressing the parts to these levels is not recommended. In addition, extended exposure to stresses above the recommended operating conditions may affect device reliability. The absolute maximum ratings are stress ratings only.

Symbol	Parameter		Min.	Max.	Units
	V_{IN}, V_{OUT}, to GND		-0.3	2.0	V
	V_{ON} to GND		-0.3	4.2	V
I_{SW}	Maximum Continuous Switch Current			1.5	A
P_D	Power Dissipation at T_A = 25°C(1)			1.2	W
T_A	Operating Temperature Range		-40	+85	°C
T_{STG}	Storage Temperature		-65	+150	°C
Θ_{JA}	Thermal Resistance, Junction to Ambient			85	°C/W
ESD	Electrostatic Discharge Protection	Human Body Model	8000		V
		Charged Device Model	2000		V

Note:
1. Package power dissipation on one-square-inch pad, two-ounce copper board.

Recommended Operating Conditions

The Recommended Operating Conditions table defines the conditions for actual device operation. Recommended operating conditions are specified to ensure optimal performance to the datasheet specifications. Fairchild does not recommend exceeding them or designing to Absolute Maximum Ratings.

Symbol	Parameter	Min.	Max.	Units
V_{IN}	Supply Voltage	0.8	1.8	V
T_A	Ambient Operating Temperature	-40	+85	°C

© 2009 Fairchild Semiconductor Corporation

Electrical Characteristics

V_{IN} = 0.8 to 1.8V, T_A = -40 to +85°C unless otherwise noted. Typical values are at V_{IN} =1.8V and T_A = 25°C.

Symbol	Parameter	Condition	Min.	Typ.	Max.	Units
Basic Operation						
V_{IN}	Operating Voltage		0.8		1.8	V
$V_{ON(MIN)}$	ON Input Voltage	V_{IN} = 0.8 V	1.8	2.8	4.0	V
$V_{ON(MAX)}$		V_{IN} = 1.8 V[2]	2.8	3.8	4.0	V
I_{CC}	Operating Current	V_{IN} = 1 V, V_{ON} = 3.3 V, V_{OUT} = Open			1	µA
I_Q	Quiescent Current	V_{IN} = 1 V, V_{ON} = GND, V_{OUT} = Open			2	µA
I_{SWOFF}	Off Switch Current	V_{IN} = 1.8 V, V_{ON} = GND, V_{OUT} = GND			2	µA
R_{ON}	On-Resistance	V_{IN} = 1 V, V_{ON} = 3 V, I_{OUT} = 1 A, T_A = 25°C		17	27	mΩ
		V_{IN} = 1 V, V_{ON} = 2.3 V, I_{OUT} = 1 A, T_A = 25°C		25	38	
R_{PD}	Output Pull-Down Resistance	V_{IN} = 1 V, V_{ON} = 0 V, I_{OUT} = 1 mA, T_A = 25°C, FPF1014		60	120	Ω
V_{IL}	ON Input Logic Low Voltage	V_{IN} = 0.8 V, R_L = 1 KΩ			0.3	V
		V_{IN} = 1.8 V, R_L = 1 KΩ			0.8	
I_{ON}	On Input Leakage	V_{ON} = V_{IN} or GND			1	µA
Dynamic (V_{IN} = 1.0 V, V_{ON} = 3.0 V, T_A = 25°C)						
t_R	V_{OUT} Rise Time	R_L = 500 Ω, C_L = 0.1 µF		28		µs
		R_L = 3.3 Ω, C_L = 10 µF		38		
t_{ON}	Turn-On Time	R_L = 500 Ω, C_L = 0.1 µF		43		µs
		R_L = 3.3 Ω, C_L = 10 µF		58		
t_F	V_{OUT} Fall Time	FPF1014, R_L = 500 Ω, C_L = 0.1 µF		14		µs
		FPF1014, R_L = 3.3 Ω, C_L = 10 µF		76		
t_{OFF}	Turn-Off Time	FPF1014, R_L = 500 Ω, C_L = 0.1 µF		50		µs
		FPF1014, R_L = 3.3 Ω, C_L = 10 µF		96		

Note:

2. $V_{ON(MAX)}$ is limited by the Absolute Maximum Rating.

© 2009 Fairchild Semiconductor Corporation

Typical Performance Characteristics

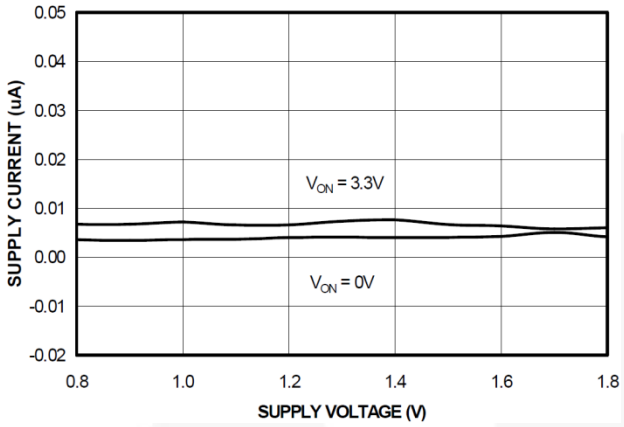

Figure 5. Supply Current vs. V_{IN}

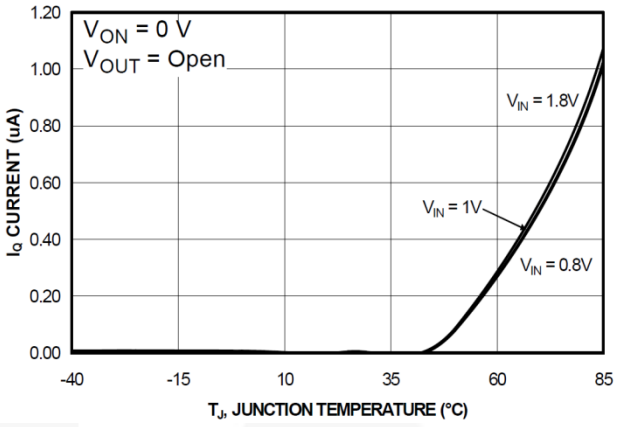

Figure 6. Off Quiescent Current vs. Temperature

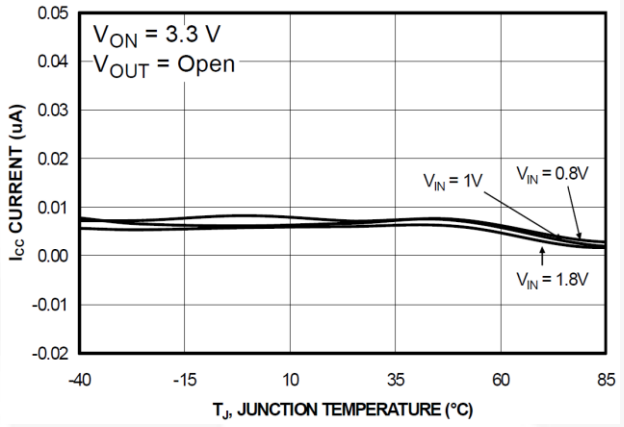

Figure 7. Operating Current vs. Temperature

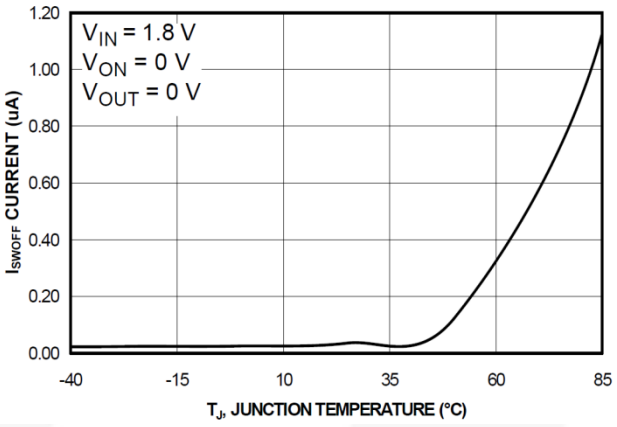

Figure 8. Off Switch Current vs. Temperature

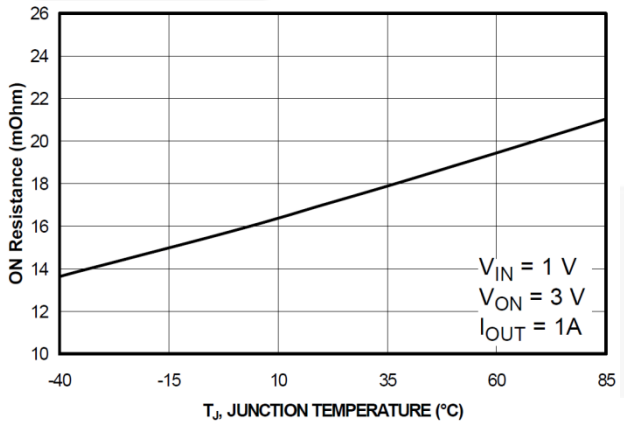

Figure 9. R_{ON} vs. Temperature

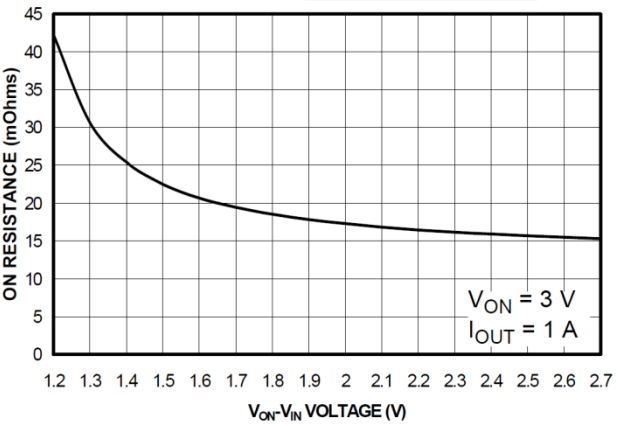

Figure 10. R_{ON} vs. V_{ON}-V_{IN}

© 2009 Fairchild Semiconductor Corporation

Typical Performance Characteristics

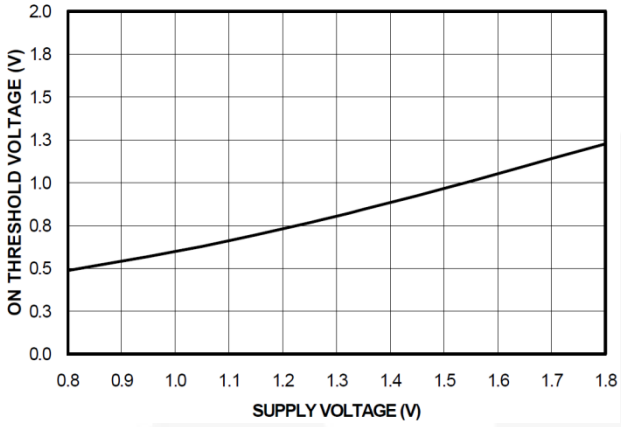

Figure 11. V_{IL} vs. V_{IN}

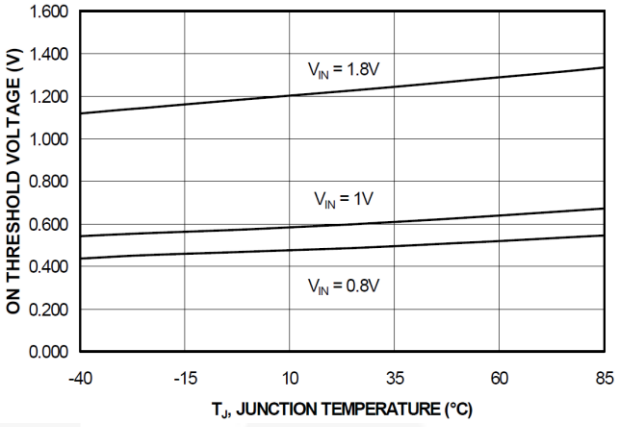

Figure 12. V_{IL} vs. Temperature

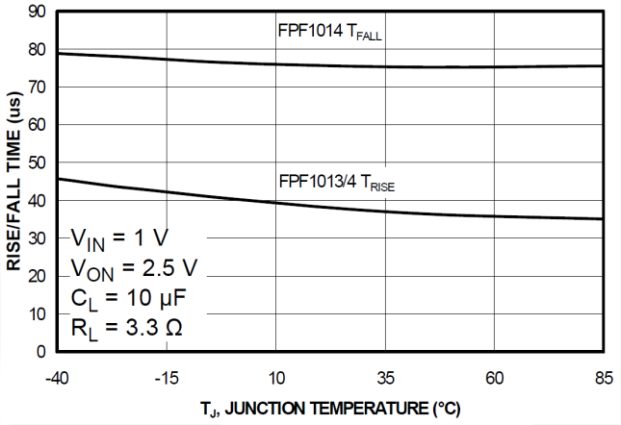

Figure 13. t_{RISE} / t_{FALL} vs. Temperature

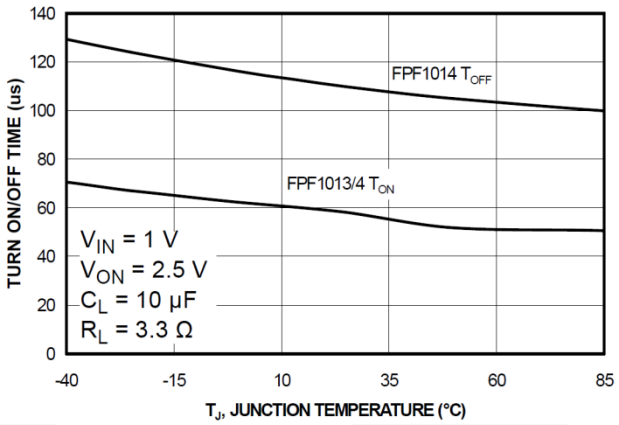

Figure 14. t_{ON} / t_{OFF} vs. Temperature

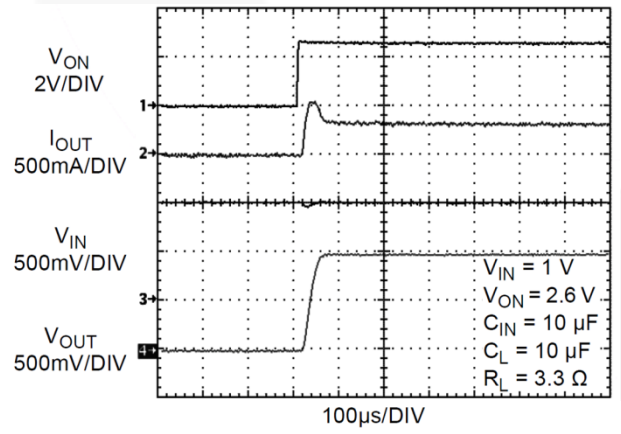

Figure 15. Turn-On Response

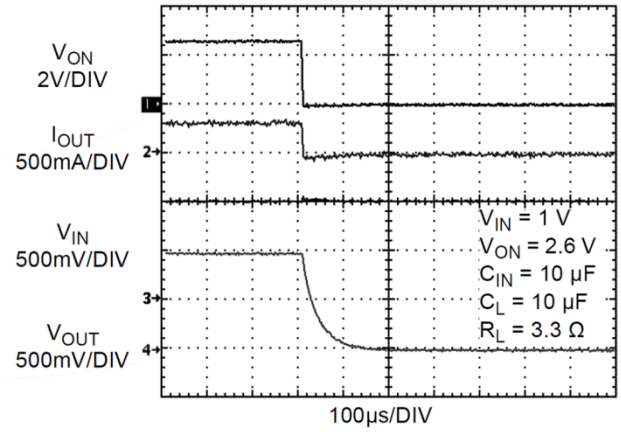

Figure 16. FPF1014 Turn-Off Response

© 2009 Fairchild Semiconductor Corporation

Typical Performance Characteristics

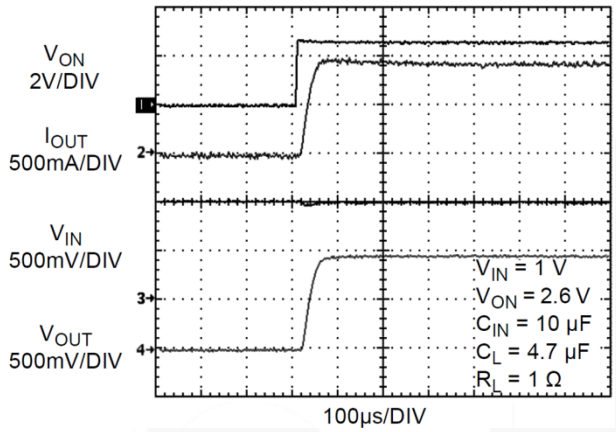

Figure 17. Turn On Response

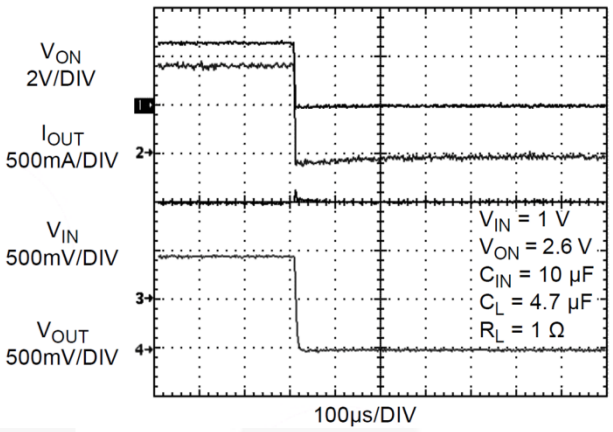

Figure 18. FPF1014 Turn-Off Response

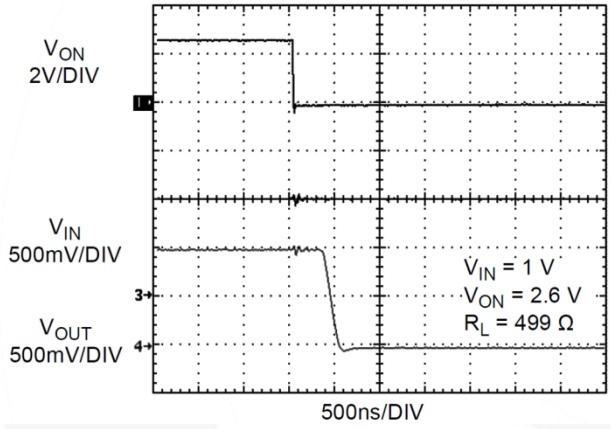

Figure 19. FPF1014 Output Pull-Down Response

Operational Description

The FPF1013/4 are low-$R_{DS(ON)}$ N-channel load switches with controlled turn-on. The core of each device is a 17 mΩ (V_{IN} = 1 V, V_{ON} = 3 V) N-channel MOSFET and is customized for a low-input operating range of 0.8 V to 1.8 V. The ON pin controls the state of the switch.

The FPF1014 contains a 60 Ω (typical) on-chip resistor, which is connected internally from VOUT to GND for quick output discharge when the switch is turned off.

On / Off Control

The ON pin is active HIGH and controls the state of the switch. Applying a continuous HIGH signal holds the switch in the ON state. To minimize the switch on resistance, the ON pin voltage should exceed the input voltage by 2 V. This device is compatible with a GPIO (General-Purpose Input / Output) port, where the logic voltage level can be configured to 4 V ≥ V_{ON} ≥ V_{IN} + 2 V and power consumed is less than 1 µA in steady state.

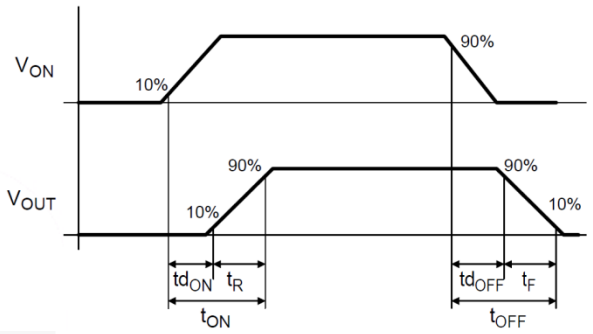

Figure 20. Timing Diagram

where:

td_{ON}	=	Delay On Time
t_R	=	V_{OUT} Rise Time
t_{ON}	=	Turn-On Time
td_{OFF}	=	Delay Off Time
t_F	=	V_{OUT} Fall Time
t_{OFF}	=	Turn-Off Time

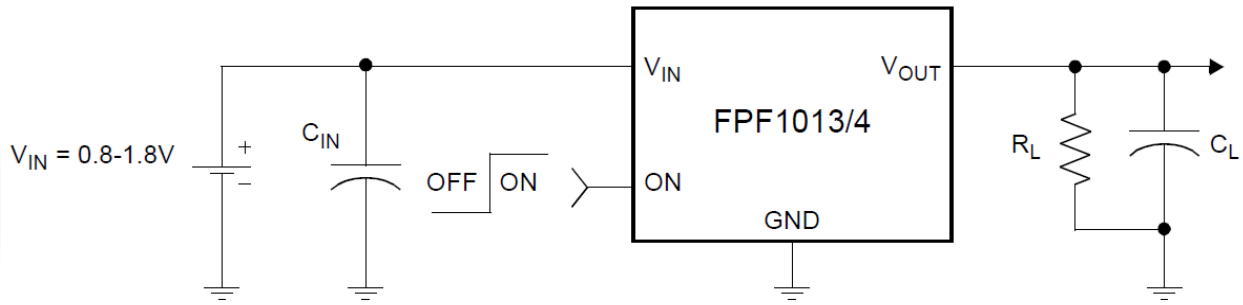

Figure 21. Typical Application

Application Information

Input Capacitor

To limit the voltage drop on the input supply caused by transient in-rush currents when the switch turns-on, a capacitor must be placed between VIN and GND. For minimized voltage drop, especially when the operating voltage approaches 1 V a 10 µF ceramic capacitor should be placed close to the VIN pins. Higher values of C_{IN} can be used to further reduce the voltage drop during higher current modes of operation.

Output Capacitor

A 0.1 µF capacitor, C_L, should be placed between VOUT and GND. This capacitor prevents parasitic board inductance from forcing V_{OUT} below GND when the switch turns off. If the application has a capacitive load, the FPF1014 can be used to discharge that load through an on-chip output discharge path.

Board Layout

For best performance, all traces should be as short as possible. To be most effective, the input and output capacitors should be placed close to the device to minimize the effects that parasitic trace inductances may have on normal and short-circuit operation. Using wide traces or large copper planes for all pins (VIN, VOUT, ON, and GND) helps minimize the parasitic electrical effects along with minimizing the case-to-ambient thermal impedance.

Improving Thermal Performance

Improper layout can result in higher junction temperature. This applies when continuous operation current is set to maximum allowed current and switch turns into a large capacitive load that introduces high inrush current in the transient. Since FPF1013/14 does not have thermal shutdown feature, proper layout can essentially reduce power dissipation of the switch in transient and prevents the switch exceeding the maximum absolute power dissipation of 1.2 W.

The VIN, VOUT, and GND pins dissipate most of the heat generated during a high load current condition. The layout suggested in Figure 22 provides each pin with adequate copper so that heat may be transferred as efficiently as possible out of the device. The ON pin trace may be laid out diagonally from the device to maximize the area available to the ground pad. Placing the input and output capacitors as close to the device as possible also contributes to heat dissipation, particularly during high load currents.

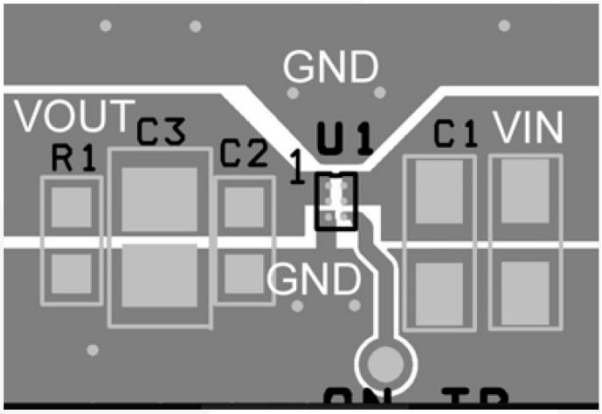

Figure 22. Proper Layout of Output, Input, and Ground Copper Area

Demonstration Board Layout

FPF1013/4 demonstration board has the components and circuitry to demonstrate the load switches functions. Thermal performance is improved using techniques recommended in the layout recommendations section of datasheet.

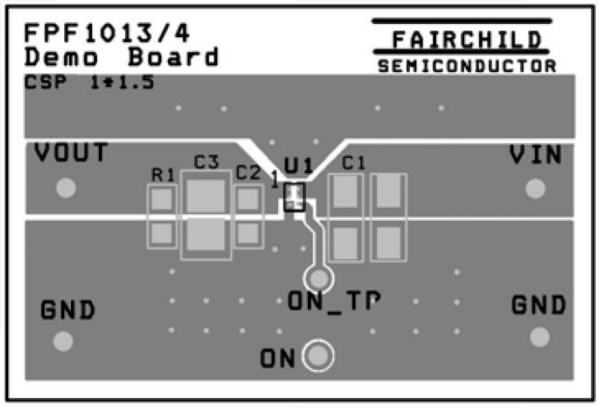

Figure 23. Demonstration Board Layout

The table below pertains to the Packaging information on the following page.

Product Dimensions

E	D	X	Y
950 µm ±30 µm	1450 µm ±30 µm	225 µm	225 µm

© 2009 Fairchild Semiconductor Corporation

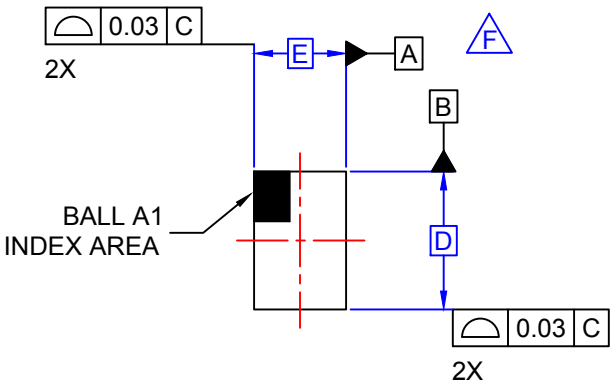

TOP VIEW

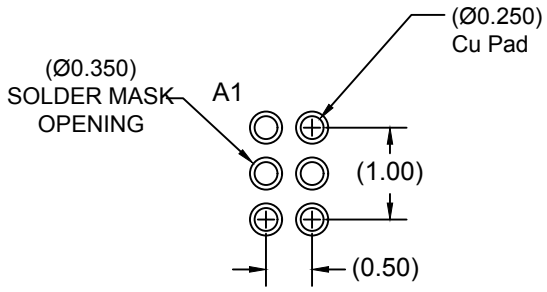

RECOMMENDED LAND PATTERN
(NSMD PAD TYPE)

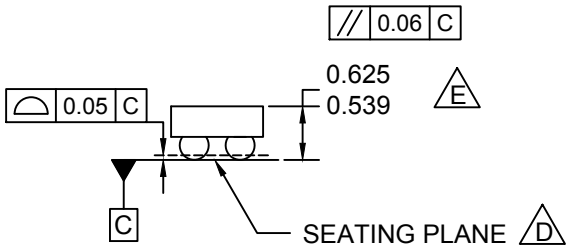

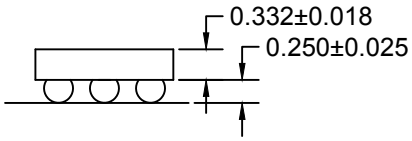

SIDE VIEWS

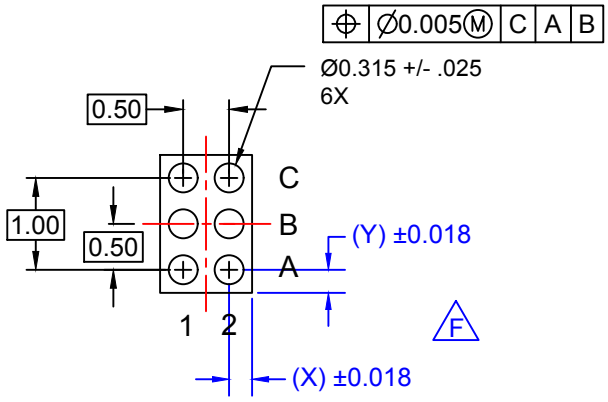

BOTTOM VIEW

NOTES:

A. NO JEDEC REGISTRATION APPLIES.

B. DIMENSIONS ARE IN MILLIMETERS.

C. DIMENSIONS AND TOLERANCE PER ASMEY14.5M, 1994.

D. DATUM C IS DEFINED BY THE SPHERICAL CROWNS OF THE BALLS.

E. PACKAGE NOMINAL HEIGHT IS 582 MICRONS ±43 MICRONS (539-625 MICRONS).

F. FOR DIMENSIONS D, E, X, AND Y SEE PRODUCT DATASHEET.

G. DRAWING FILNAME: MKT-UC006AFrev3.

FAIRCHILD™

ON Semiconductor and ON are trademarks of Semiconductor Components Industries, LLC dba ON Semiconductor or its subsidiaries in the United States and/or other countries. ON Semiconductor owns the rights to a number of patents, trademarks, copyrights, trade secrets, and other intellectual property. A listing of ON Semiconductor's product/patent coverage may be accessed at www.onsemi.com/site/pdf/Patent−Marking.pdf. ON Semiconductor reserves the right to make changes without further notice to any products herein. ON Semiconductor makes no warranty, representation or guarantee regarding the suitability of its products for any particular purpose, nor does ON Semiconductor assume any liability arising out of the application or use of any product or circuit, and specifically disclaims any and all liability, including without limitation special, consequential or incidental damages. Buyer is responsible for its products and applications using ON Semiconductor products, including compliance with all laws, regulations and safety requirements or standards, regardless of any support or applications information provided by ON Semiconductor. "Typical" parameters which may be provided in ON Semiconductor data sheets and/or specifications can and do vary in different applications and actual performance may vary over time. All operating parameters, including "Typicals" must be validated for each customer application by customer's technical experts. ON Semiconductor does not convey any license under its patent rights nor the rights of others. ON Semiconductor products are not designed, intended, or authorized for use as a critical component in life support systems or any FDA Class 3 medical devices or medical devices with a same or similar classification in a foreign jurisdiction or any devices intended for implantation in the human body. Should Buyer purchase or use ON Semiconductor products for any such unintended or unauthorized application, Buyer shall indemnify and hold ON Semiconductor and its officers, employees, subsidiaries, affiliates, and distributors harmless against all claims, costs, damages, and expenses, and reasonable attorney fees arising out of, directly or indirectly, any claim of personal injury or death associated with such unintended or unauthorized use, even if such claim alleges that ON Semiconductor was negligent regarding the design or manufacture of the part. ON Semiconductor is an Equal Opportunity/Affirmative Action Employer. This literature is subject to all applicable copyright laws and is not for resale in any manner.

PUBLICATION ORDERING INFORMATION

LITERATURE FULFILLMENT:
Literature Distribution Center for ON Semiconductor
19521 E. 32nd Pkwy, Aurora, Colorado 80011 USA
Phone: 303−675−2175 or 800−344−3860 Toll Free USA/Canada
Fax: 303−675−2176 or 800−344−3867 Toll Free USA/Canada
Email: orderlit@onsemi.com

N. American Technical Support: 800−282−9855 Toll Free USA/Canada
Europe, Middle East and Africa Technical Support:
Phone: 421 33 790 2910
Japan Customer Focus Center
Phone: 81−3−5817−1050

ON Semiconductor Website: **www.onsemi.com**

Order Literature: http://www.onsemi.com/orderlit

For additional information, please contact your local Sales Representative