# Single Bit Uni-Directional Translator

# FXLP34



**SIP6 1.45X1.0**
**CASE 127EB**



**UDFN6**
**1.0X1.0, 0.35P**
**CASE 517DP**

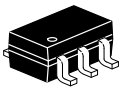

**SC−88A (SC−70**
**5 Lead), 1.25x2**
**CASE 419AC−01**

**MARKING DIAGRAM**

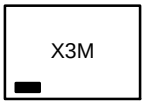


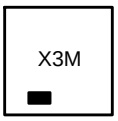


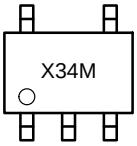


X3, X34 = Device Code
M = Assembly Operation Month

## Description

The FXLP34 is a single translator with two separate supply voltages: $V_{CC1}$ for input translation voltages and $V_{CC}$ for output translation voltages. The FXLP34 is part of **onsemi**'s Ultra Low Power (ULP) series of products. This device operates with VCC values from 1.0 V to 3.6 V, and is intended for use in portable applications that require ultra low power consumption.

The internal circuit is composed of a minimum of buffer stages, to enable ultra low dynamic power.

The FXLP34 is uniquely designed for optimized power and speed, and is fabricated with an advanced CMOS technology to achieve high−speed operation while maintaining low CMOS power dissipation.

## Features

- 1.0 V to 3.6 V $V_{CC}$ Supply Voltage
- Converts Any Voltage (1.0 V to 3.6 V) to (1.0 V to 3.6 V)
- 4.6V Tolerant Inputs and Outputs
- $t_{PD}$:
  - 4 ns Typical for 3.0 V to 3.6 V $V_{CC}$
- Power−Off High Impedance Inputs and Outputs
- Static Drive ($I_{OH}/I_{OL}$):
  - ±2.6 mA at 3.00 V $V_{CC}$
- Uses Proprietary Quiet Series Noise / EMI Reduction Circuitry
- Ultra−Small MicroPak™ Leadless Packages
- Ultra−Low Dynamic Power
- These are Pb−Free Devices

## ORDERING INFORMATION

See detailed ordering and shipping information on page 9 of this data sheet.

© Semiconductor Components Industries, LLC, 2006

## PIN CONFIGURATION

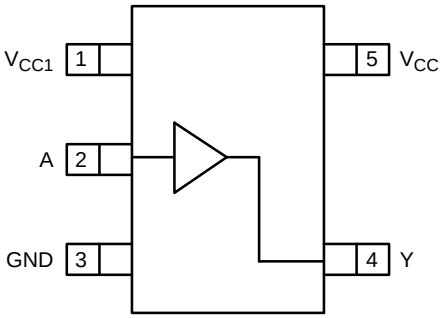


**Figure 1. SC70 (Top View)**

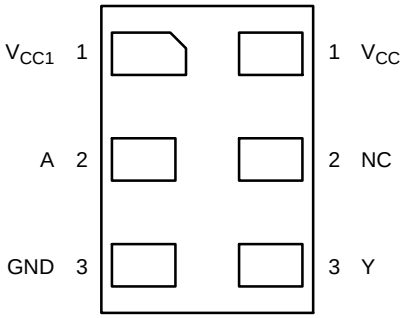


**Figure 2. MicroPak (Top Through View)**

### PIN DEFINITIONS

| Pin # SC70 | Pin # MicroPak | Name | Description |
|---|---|---|---|
| 1 | 1 | $V_{CC1}$ | Input Translation Voltage |
| 2 | 2 | A | Input |
| 3 | 3 | GND | Ground |
| 4 | 4 | Y | Output |
| | 5 | NC | No Connect |
| 5 | 6 | $V_{CC}$ | Output Translation Voltage |

### TRUTH TABLE

| Input | Outputs |
|---|---|
| **A** | **Y** |
| L | L |
| H | H |

H = Logic Level HIGH
L = Logic Level Low

## ABSOLUTE MAXIMUM RATINGS

| Symbol | Parameter | | Min | Max | Unit |
|---|---|---|---|---|---|
| $V_{CC}$, $V_{CC1}$ | Supply Voltage | | −0.5 | +4.6 | V |
| $V_{IN}$ | DC Input Voltage | | −0.5 | +4.6 | V |
| $V_{OUT}$ | DC Output Voltage | HIGH or LOW State (Note 1) | −0.5 | $V_{CC}$ + 0.5 V | V |
| | | $V_{CC}$ = 0 V | −0.5 | +4.6 | |
| $I_{IK}$ | DC Input Diode Current | $V_{IN}$ < 0 | − | −50 | mA |
| $I_{OK}$ | DC Output Diode Current | $V_{OUT}$ < 0 V | − | −50 | mA |
| | | $V_{OUT}$ > $V_{CC}$ | − | +50 | |
| $I_{OH}$/$I_{OL}$ | DC Output Source/Sink Current | | − | ±50 | mA |
| $I_{CC}$ or $I_{GND}$ | DC $V_{CC}$ or Ground Current per Supply Pin | | − | ±100 | mA |
| $T_{STG}$ | Storage Temperature Range | | −65 | 150 | °C |
| $P_D$ | Power Dissipation at +85°C | SC70−6 | − | 180 | mW |
| | | MicroPak™ −6 | − | 130 | |
| | | MicroPak2™ −6 | − | 120 | |
| ESD | Human Body Model, JEDEC:JESD22−A114 | | − | 4000 | V |
| | Charge Device Model, JEDEC:JESD22−C101 | | − | 2000 | |

Stresses exceeding those listed in the Maximum Ratings table may damage the device. If any of these limits are exceeded, device functionality should not be assumed, damage may occur and reliability may be affected.

1. $I_O$ Absolute Maximum Rating must be observed.

## RECOMMENDED OPERATING CONDITIONS

| Symbol | Parameter | Conditions | Min | Max | Unit |
|---|---|---|---|---|---|
| $V_{CC}$, $V_{CC1}$ | Supply Voltage | | 1.0 | 3.6 | V |
| $V_{IN}$ | Input Voltage | | 0 | 3.6 | V |
| $V_{OUT}$ | Output Voltage | HIGH or LOW State | 0 | $V_{CC}$ | V |
| | | $V_{CC}$ = 0 V | 0 | 3.6 | |
| $I_{OH}$/$I_{OL}$ | Output Current in $I_{OH}$/$I_{OL}$ | $V_{CC}$ = 3.0 to 3.6 V | − | ±2.6 | mA |
| | | $V_{CC}$ = 2.3 to 2.7 V | − | ±2.1 | |
| | | $V_{CC}$ = 1.65 to 1.95 V | − | ±1.5 | |
| | | $V_{CC}$ = 1.40 to 1.60 V | − | ±1.0 | |
| | | $V_{CC}$ = 1.10 to 1.30 V | − | ±0.5 | |
| | | $V_{CC}$ = 1.0 V | − | ±20 | μA |
| $T_A$ | Operating Temperature, Free Air | | −40 | +85 | °C |
| $\theta_{JA}$ | Thermal Resistance | SC70−6 | − | 425 | °C/W |
| | | MicroPak−6 | − | 500 | |
| | | MicroPak2−6 | − | 560 | |

Functional operation above the stresses listed in the Recommended Operating Ranges is not implied. Extended exposure to stresses beyond the Recommended Operating Ranges limits may affect device reliability.

2. Unused inputs must be held HIGH or LOW. They may not float.

## ELECTRICAL CHARACTERISTIICS

| Symbol | Parameter | Condition | $V_{CC}$ (V) | $V_{CC1}$ (V) | $T_A$ = +25°C | | $T_A$ = −40 to 85°C | | Unit |
|---|---|---|---|---|---|---|---|---|---|
| | | | | | Min | Max | Min | Max | |
| $V_{IH}$ | HIGH Level Input ($V_{CC1}$) | | 1.0 to 3.6 | 1.0 | 0.65 x $V_{CCI}$ | − | 0.65 x $V_{CCI}$ | − | V |
| | | | | 1.10 ≤ $V_{CC1}$ ≤ 1.30 | 0.65 x $V_{CCI}$ | − | 0.65 x $V_{CCI}$ | − | |
| | | | | 1.40 ≤ $V_{CC1}$ ≤ 1.60 | 0.65 x $V_{CCI}$ | − | 0.65 x $V_{CCI}$ | − | |
| | | | | 1.65 ≤ $V_{CC1}$ ≤ 1.95 | 0.65 x $V_{CCI}$ | − | 0.65 x $V_{CCI}$ | − | |
| | | | | 2.30 ≤ $V_{CC1}$ ≤ 2.70 | 1.6 | − | 1.6 | − | |
| | | | | 3.00 ≤ $V_{CC1}$ ≤ 3.60 | 2.1 | − | 2.1 | − | |
| $V_{IL}$ | LOW Level Input ($V_{CC1}$) | | 1.0 to 3.6 | 1.0 | − | 0.35 x $V_{CCI}$ | − | 0.35 x $V_{CCI}$ | V |
| | | | | 1.10 ≤ $V_{CC1}$ ≤ 1.30 | − | 0.35 x $V_{CCI}$ | − | 0.35 x $V_{CCI}$ | |
| | | | | 1.40 ≤ $V_{CC1}$ ≤ 1.60 | − | 0.35 x $V_{CCI}$ | − | 0.35 x $V_{CCI}$ | |
| | | | | 1.65 ≤ $V_{CC1}$ ≤ 1.95 | − | 0.35 x $V_{CCI}$ | − | 0.35 x $V_{CCI}$ | |
| | | | | 2.30 ≤ $V_{CC1}$ ≤ 2.70 | − | 0.7 | − | 0.7 | |
| | | | | 3.00 ≤ $V_{CC1}$ ≤ 3.60 | − | 0.9 | − | 0.9 | |
| $V_{OH}$ | HIGH Level Output ($V_{CC}$) | $I_{OH}$ = −20 μA | 1.0 | 1.0 to 3.6 | $V_{CC}$ − 0.1 | − | $V_{CC}$ − 0.1 | − | V |
| | | | 1.10 ≤ $V_{CC1}$ ≤ 1.30 | | $V_{CC}$ − 0.1 | − | $V_{CC}$ − 0.1 | − | |
| | | | 1.40 ≤ $V_{CC1}$ ≤ 1.60 | | $V_{CC}$ − 0.1 | − | $V_{CC}$ − 0.1 | − | |
| | | | 1.65 ≤ $V_{CC1}$ ≤ 1.95 | | $V_{CC}$ − 0.1 | − | $V_{CC}$ − 0.1 | − | |
| | | | 2.30 ≤ $V_{CC1}$ ≤ 2.70 | | $V_{CC}$ − 0.1 | − | $V_{CC}$ − 0.1 | − | |
| | | | 3.00 ≤ $V_{CC1}$ ≤ 3.60 | | $V_{CC}$ − 0.1 | − | $V_{CC}$ − 0.1 | − | |
| | | $I_{OH}$ = −0.5 mA | 1.10 ≤ $V_{CC1}$ ≤ 1.30 | 1.0 to 3.6 | 0.75 x $V_{CC}$ | − | 0.70 x $V_{CC}$ | − | |
| | | $I_{OH}$ = −1.0 mA | 1.40 ≤ $V_{CC1}$ ≤ 1.60 | | 1.07 | − | 0.99 | − | |
| | | $I_{OH}$ = −1.5 mA | 1.65 ≤ $V_{CC1}$ ≤ 1.95 | | 1.24 | − | 1.22 | − | |
| | | $I_{OH}$ = −2.1 mA | 2.30 ≤ $V_{CC1}$ ≤ 2.70 | | 1.95 | − | 1.87 | − | |
| | | $I_{OH}$ = −2.6 mA | 3.00 ≤ $V_{CC1}$ ≤ 3.60 | | 2.61 | − | 2.55 | − | |
| $V_{OL}$ | LOW Level Output ($V_{CC}$) | $I_{OL}$ = 20 μA | 1.0 | 1.0 to 3.6 | − | 0.1 | − | 0.1 | V |
| | | | 1.10 ≤ $V_{CC1}$ ≤ 1.30 | | − | 0.1 | − | 0.1 | |
| | | | 1.40 ≤ $V_{CC1}$ ≤ 1.60 | | − | 0.1 | − | 0.1 | |
| | | | 1.65 ≤ $V_{CC1}$ ≤ 1.95 | | − | 0.1 | − | 0.1 | |
| | | | 2.30 ≤ $V_{CC1}$ ≤ 2.70 | | − | 0.1 | − | 0.1 | |
| | | $I_{OL}$ = 0.5 mA | 1.10 ≤ $V_{CC1}$ ≤ 1.30 | 1.0 to 3.6 | − | 0.30 x $V_{CC}$ | − | 0.30 x $V_{CC}$ | |
| | | $I_{OL}$ = 1.0 mA | 1.40 ≤ $V_{CC1}$ ≤ 1.60 | | − | 0.31 | − | 0.37 | |
| | | $I_{OL}$ = 1.5 mA | 1.65 ≤ $V_{CC1}$ ≤ 1.95 | | − | 0.31 | − | 0.35 | |
| | | $I_{OL}$ = 2.1 mA | 2.30 ≤ $V_{CC1}$ ≤ 2.70 | | − | 0.31 | − | 0.33 | |
| | | $I_{OL}$ = 2.6 mA | 3.00 ≤ $V_{CC1}$ ≤ 3.60 | | − | 0.31 | − | 0.33 | |
| $I_{IN}$ | Input Leakage Current | 0 ≤ $V_{IN}$ ≤ 3.60 | | 1.0 to 3.6 | − | ±0.1 | − | ±1.0 | μA |
| $I_{OFF}$ | Power Off Leakage Current | 0 ≤ ($V_{IN}$, $V_O$) ≤ 3.60 | 0 | 0 | − | 1.0 | − | 5.0 | μA |
| $I_{CC}$ | Quiescent Supply Current | $V_{IN}$ = $V_{CC}$ or GND | 1.0 to 3.6 | 1.0 to 3.6 | − | 0.9 | − | 5.0 | μA |

Product parametric performance is indicated in the Electrical Characteristics for the listed test conditions, unless otherwise noted. Product performance may not be indicated by the Electrical Characteristics if operated under different conditions.

## AC ELECTRICAL CHARACTERISTIICS

| Symbol | Parameter | Condition | $V_{CC}$ (V) | $T_A$ = +25°C | | | $T_A$ = −40 to 85°C | | Unit | Figure |
|---|---|---|---|---|---|---|---|---|---|---|
| | | | | Min | Typ | Max | Min | Max | | |
| $t_{PHL}$, $t_{PLH}$ | Propagation Delay Output Translation $V_{CC}$ (V) = 1.0 | $C_L$ = 10 pF, $R_L$ = 1 MΩ | 1.0 | – | 26.0 | – | – | – | ns | Figure 3, Figure 4 |
| | | | 1.10 to 1.30 | 15.0 | 25.0 | 38.1 | 12.0 | 43.3 | | |
| | | | 1.40 to 1.60 | 14.0 | 24.0 | 36.7 | 11.0 | 42.0 | | |
| | | | 1.65 to 1.95 | 13.0 | 23.0 | 36.0 | 10.0 | 41.4 | | |
| | | | 2.30 to 2.70 | 12.0 | 22.0 | 35.5 | 9.0 | 40.9 | | |
| | | | 3.00 to 3.60 | 11.0 | 21.0 | 35.5 | 8.0 | 40.6 | | |
| $t_{PHL}$, $t_{PLH}$ | Propagation Delay Output Translation $V_{CC}$ (V) = 1.2 | $C_L$ = 10 pF, $R_L$ = 1 MΩ | 1.0 | – | 18.0 | – | – | – | ns | Figure 3, Figure 4 |
| | | | 1.10 to 1.30 | 8.0 | 15.0 | 23.2 | 6.0 | 41.0 | | |
| | | | 1.40 to 1.60 | 7.5 | 14.0 | 21.7 | 5.5 | 39.1 | | |
| | | | 1.65 to 1.95 | 7.0 | 13.0 | 20.9 | 5.0 | 32.3 | | |
| | | | 2.30 to 2.70 | 6.5 | 12.0 | 20.4 | 4.5 | 29.6 | | |
| | | | 3.00 to 3.60 | 6.0 | 12.0 | 20.2 | 4.0 | 29.4 | | |
| $t_{PHL}$, $t_{PLH}$ | Propagation Delay Output Translation $V_{CC}$ (V) = 1.5 | $C_L$ = 10 pF, $R_L$ = 1 MΩ | 1.0 | – | 14.0 | – | – | – | ns | Figure 3, Figure 4 |
| | | | 1.10 to 1.30 | 5.0 | 11.0 | 16.3 | 4.0 | 20.6 | | |
| | | | 1.40 to 1.60 | 4.8 | 10.0 | 14.8 | 3.5 | 19.3 | | |
| | | | 1.65 to 1.95 | 4.5 | 9.0 | 14.1 | 3.0 | 18.7 | | |
| | | | 2.30 to 2.70 | 4.0 | 8.0 | 13.5 | 2.5 | 18.0 | | |
| | | | 3.00 to 3.60 | 3.5 | 8.0 | 13.3 | 2.0 | 17.8 | | |
| $t_{PHL}$, $t_{PLH}$ | Propagation Delay Output Translation $V_{CC}$ (V) = 1.8 | $C_L$ = 10 pF, $R_L$ = 1 MΩ | 1.0 | – | 13.0 | – | – | – | ns | Figure 3, Figure 4 |
| | | | 1.10 to 1.30 | 4.0 | 9.0 | 13.5 | 3.0 | 17.5 | | |
| | | | 1.40 to 1.60 | 3.5 | 8.0 | 12.0 | 2.5 | 16.3 | | |
| | | | 1.65 to 1.95 | 3.0 | 7.0 | 11.3 | 2.0 | 15.6 | | |
| | | | 2.30 to 2.70 | 2.5 | 6.0 | 10.7 | 1.5 | 15.0 | | |
| | | | 3.00 to 3.60 | 2.5 | 6.0 | 10.5 | 1.0 | 14.7 | | |
| $t_{PHL}$, $t_{PLH}$ | Propagation Delay Output Translation $V_{CC}$ (V) = 2.5 | $C_L$ = 10 pF, $R_L$ = 1 MΩ | 1.0 | – | 12.0 | – | – | – | ns | Figure 3, Figure 4 |
| | | | 1.10 to 1.30 | 3.0 | 7.0 | 10.9 | 2.5 | 14.3 | | |
| | | | 1.40 to 1.60 | 2.5 | 6.0 | 9.4 | 2.0 | 13.1 | | |
| | | | 1.65 to 1.95 | 2.0 | 5.0 | 8.6 | 1.5 | 11.4 | | |
| | | | 2.30 to 2.70 | 1.5 | 4.0 | 8.0 | 1.0 | 10.8 | | |
| | | | 3.00 to 3.60 | 1.5 | 4.0 | 7.8 | 1.0 | 10.5 | | |
| $t_{PHL}$, $t_{PLH}$ | Propagation Delay Output Translation $V_{CC}$ (V) = 3.3 | $C_L$ = 10 pF, $R_L$ = 1 MΩ | 1.0 | – | 11.0 | – | – | – | ns | Figure 3, Figure 4 |
| | | | 1.10 to 1.30 | 3.0 | 6.0 | 10.1 | 2.0 | 13.8 | | |
| | | | 1.40 to 1.60 | 2.5 | 5.0 | 8.2 | 1.5 | 10.5 | | |
| | | | 1.65 to 1.95 | 2.0 | 4.0 | 7.4 | 1.0 | 9.9 | | |
| | | | 2.30 to 2.70 | 1.0 | 3.0 | 6.8 | 1.0 | 9.2 | | |
| | | | 3.00 to 3.60 | 1.0 | 3.0 | 6.6 | 1.0 | 9.0 | | |

**AC ELECTRICAL CHARACTERISTIICS** (continued)

| Symbol | Parameter | Condition | $V_{CC}$ (V) | $T_A$ = +25°C | | | $T_A$ = −40 to 85°C | | Unit | Figure |
|---|---|---|---|---|---|---|---|---|---|---|
| | | | | Min | Typ | Max | Min | Max | | |
| $t_{PHL}$, $t_{PLH}$ | Propagation Delay Output Translation $V_{CC}$ (V) = 1.0 | $C_L$ = 15 pF, $R_L$ = 1 MΩ | 1.0 | – | 28.0 | – | – | – | ns | Figure 3, Figure 4 |
| | | | 1.10 to 1.30 | 16.0 | 27.0 | 43.0 | 12.0 | 44.8 | | |
| | | | 1.40 to 1.60 | 15.0 | 26.0 | 41.6 | 11.0 | 43.6 | | |
| | | | 1.65 to 1.95 | 14.0 | 25.0 | 40.9 | 10.0 | 47.9 | | |
| | | | 2.30 to 2.70 | 13.0 | 24.0 | 40.5 | 9.0 | 47.5 | | |
| | | | 3.00 to 3.60 | 12.0 | 23.0 | 40.4 | 8.0 | 41.4 | | |
| $t_{PHL}$, $t_{PLH}$ | Propagation Delay Output Translation $V_{CC}$ (V) = 1.2 | $C_L$ = 15 pF, $R_L$ = 1 MΩ | 1.0 | – | 19.0 | – | – | – | ns | Figure 3, Figure 4 |
| | | | 1.10 to 1.30 | 9.0 | 16.0 | 24.6 | 8.0 | 43.1 | | |
| | | | 1.40 to 1.60 | 8.5 | 15.0 | 23.1 | 7.5 | 42.2 | | |
| | | | 1.65 to 1.95 | 8.0 | 14.0 | 22.4 | 7.0 | 31.4 | | |
| | | | 2.30 to 2.70 | 7.5 | 13.0 | 21.8 | 6.5 | 30.7 | | |
| | | | 3.00 to 3.60 | 7.0 | 13.0 | 21.6 | 6.0 | 30.5 | | |
| $t_{PHL}$, $t_{PLH}$ | Propagation Delay Output Translation $V_{CC}$ (V) = 1.5 | $C_L$ = 15 pF, $R_L$ = 1 MΩ | 1.0 | – | 15.0 | – | – | – | ns | Figure 3, Figure 4 |
| | | | 1.10 to 1.30 | 6.0 | 12.0 | 17.2 | 5.5 | 21.5 | | |
| | | | 1.40 to 1.60 | 5.8 | 11.0 | 15.7 | 5.0 | 20.3 | | |
| | | | 1.65 to 1.95 | 5.5 | 10.0 | 14.9 | 4.5 | 19.6 | | |
| | | | 2.30 to 2.70 | 5.0 | 9.0 | 14.3 | 4.0 | 18.9 | | |
| | | | 3.00 to 3.60 | 4.5 | .0 | 14.2 | 3.5 | 18.7 | | |
| $t_{PHL}$, $t_{PLH}$ | Propagation Delay Output Translation $V_{CC}$ (V) = 1.8 | $C_L$ = 15 pF, $R_L$ = 1 MΩ | 1.0 | – | 14.0 | – | – | – | ns | Figure 3, Figure 4 |
| | | | 1.10 to 1.30 | 5.0 | 8.0 | 14.2 | 5.5 | 18.2 | | |
| | | | 1.40 to 1.60 | 4.5 | 7.0 | 12.7 | 4.0 | 17.0 | | |
| | | | 1.65 to 1.95 | 4.0 | 6.0 | 11.9 | 3.5 | 16.3 | | |
| | | | 2.30 to 2.70 | 3.5 | 5.0 | 11.3 | 3.0 | 15.7 | | |
| | | | 3.00 to 3.60 | 3.5 | 5.0 | 11.2 | 2.5 | 14.4 | | |
| $t_{PHL}$, $t_{PLH}$ | Propagation Delay Output Translation $V_{CC}$ (V) = 2.5 | $C_L$ = 15 pF, $R_L$ = 1 MΩ | 1.0 | – | 12.0 | – | – | – | ns | Figure 3, Figure 4 |
| | | | 1.10 to 1.30 | 4.0 | 7.0 | 11.3 | 3.5 | 14.9 | | |
| | | | 1.40 to 1.60 | 3.5 | 6.0 | 9.8 | 3.0 | 13.6 | | |
| | | | 1.65 to 1.95 | 3.0 | 5.0 | 9.1 | 2.5 | 12.0 | | |
| | | | 2.30 to 2.70 | 2.5 | 4.0 | 8.5 | 2.0 | 11.3 | | |
| | | | 3.00 to 3.60 | 2.5 | 4.0 | 8.3 | 2.0 | 11.1 | | |
| $t_{PHL}$, $t_{PLH}$ | Propagation Delay Output Translation $V_{CC}$ (V) = 3.3 | $C_L$ = 15 pF, $R_L$ = 1 MΩ | 1.0 | – | 11.0 | – | – | – | ns | Figure 3, Figure 4 |
| | | | 1.10 to 1.30 | 3.0 | 6.0 | 10.5 | 2.0 | 14.2 | | |
| | | | 1.40 to 1.60 | 2.5 | 5.0 | 8.6 | 1.5 | 11.0 | | |
| | | | 1.65 to 1.95 | 2.0 | 4.0 | 7.8 | 1.0 | 10.3 | | |
| | | | 2.30 to 2.70 | 1.5 | 3.0 | 7.2 | 1.0 | 9.7 | | |
| | | | 3.00 to 3.60 | 1.5 | 3.0 | 7.0 | 1.0 | 9.4 | | |

**AC ELECTRICAL CHARACTERISTIICS** (continued)

| Symbol | Parameter | Condition | $V_{CC}$ (V) | $T_A$ = +25°C | | | $T_A$ = −40 to 85°C | | Unit | Figure |
|---|---|---|---|---|---|---|---|---|---|---|
| | | | | Min | Typ | Max | Min | Max | | |
| $t_{PHL}$, $t_{PLH}$ | Propagation Delay Output Translation $V_{CC}$ (V) = 1.0 | $C_L$ = 30 pF, $R_L$ = 1 MΩ | 1.0 | – | 34.0 | – | – | – | ns | Figure 3, Figure 4 |
| | | | 1.10 to 1.30 | 19.0 | 32.0 | 48.6 | 15.0 | 55.5 | | |
| | | | 1.40 to 1.60 | 18.0 | 31.0 | 47.1 | 14.0 | 52.3 | | |
| | | | 1.65 to 1.95 | 17.0 | 30.0 | 46.4 | 13.0 | 50.6 | | |
| | | | 2.30 to 2.70 | 16.0 | 29.0 | 45.9 | 12.0 | 49.2 | | |
| | | | 3.00 to 3.60 | 15.0 | 28.0 | 45.8 | 10.0 | 49.1 | | |
| $t_{PHL}$, $t_{PLH}$ | Propagation Delay Output Translation $V_{CC}$ (V) = 1.2 | $C_L$ = 30 pF, $R_L$ = 1 MΩ | 1.0 | – | 22.0 | – | – | – | ns | Figure 3, Figure 4 |
| | | | 1.10 to 1.30 | 11.0 | 19.0 | 29.0 | 10.0 | 46.5 | | |
| | | | 1.40 to 1.60 | 10.0 | 18.0 | 27.5 | 9.0 | 42.6 | | |
| | | | 1.65 to 1.95 | 9.0 | 17.0 | 26.7 | 8.0 | 36.7 | | |
| | | | 2.30 to 2.70 | 8.5 | 16.0 | 26.1 | 7.0 | 36.0 | | |
| | | | 3.00 to 3.60 | 8.0 | 16.0 | 26.0 | 6.0 | 35.9 | | |
| $t_{PHL}$, $t_{PLH}$ | Propagation Delay Output Translation $V_{CC}$ (V) = 1.5 | $C_L$ = 30 pF, $R_L$ = 1 MΩ | 1.0 | – | 16.0 | – | – | – | ns | Figure 3, Figure 4 |
| | | | 1.10 to 1.30 | 6.0 | 13.0 | 19.8 | 5.5 | 25.3 | | |
| | | | 1.40 to 1.60 | 5.8 | 12.0 | 18.3 | 5.0 | 23.0 | | |
| | | | 1.65 to 1.95 | 5.5 | 11.0 | 17.6 | 4.5 | 22.4 | | |
| | | | 2.30 to 2.70 | 5.0 | 10.0 | 17.0 | 4.0 | 21.7 | | |
| | | | 3.00 to 3.60 | 4.5 | 9.0 | 16.8 | 3.5 | 21.5 | | |
| $t_{PHL}$, $t_{PLH}$ | Propagation Delay Output Translation $V_{CC}$ (V) = 1.8 | $C_L$ = 30 pF, $R_L$ = 1 MΩ | 1.0 | – | 15.0 | – | – | – | ns | Figure 3, Figure 4 |
| | | | 1.10 to 1.30 | 5.0 | 11.0 | 16.2 | 5.5 | 20.4 | | |
| | | | 1.40 to 1.60 | 4.5 | 10.0 | 14.7 | 4.0 | 19.2 | | |
| | | | 1.65 to 1.95 | 4.0 | 9.0 | 13.9 | 3.5 | 18.5 | | |
| | | | 2.30 to 2.70 | 3.5 | 8.0 | 13.3 | 3.0 | 17.9 | | |
| | | | 3.00 to 3.60 | 3.5 | 8.0 | 13.1 | 2.5 | 17.6 | | |
| $t_{PHL}$, $t_{PLH}$ | Propagation Delay Output Translation $V_{CC}$ (V) = 2.5 | $C_L$ = 30 pF, $R_L$ = 1 MΩ | 1.0 | – | 13.0 | – | – | – | ns | Figure 3, Figure 4 |
| | | | 1.10 to 1.30 | 4.0 | 8.0 | 12.7 | 3.5 | 15.9 | | |
| | | | 1.40 to 1.60 | 3.5 | 7.0 | 11.2 | 3.0 | 14.3 | | |
| | | | 1.65 to 1.95 | 3.0 | 6.0 | 10.5 | 2.5 | 13.6 | | |
| | | | 2.30 to 2.70 | 2.5 | 5.0 | 9.9 | 2.0 | 12.8 | | |
| | | | 3.00 to 3.60 | 2.5 | 5.0 | 9.7 | 2.0 | 12.5 | | |
| $t_{PHL}$, $t_{PLH}$ | Propagation Delay Output Translation $V_{CC}$ (V) = 3.3 | $C_L$ = 30 pF, $R_L$ = 1 MΩ | 1.0 | – | 12.0 | – | – | – | ns | Figure 3, Figure 4 |
| | | | 1.10 to 1.30 | 3.0 | 8.0 | 11.7 | 2.0 | 15.0 | | |
| | | | 1.40 to 1.60 | 2.5 | 7.0 | 9.8 | 1.5 | 12.2 | | |
| | | | 1.65 to 1.95 | 2.0 | 6.0 | 8.9 | 1.0 | 11.5 | | |
| | | | 2.30 to 2.70 | 1.5 | 5.0 | 8.3 | 1.0 | 10.7 | | |
| | | | 3.00 to 3.60 | 1.5 | 5.0 | 8.1 | 1.0 | 10.4 | | |

**CAPACITANCE**

| Symbol | Parameter | Conditions | $V_{CC}$ / $V_{CC1}$ (V) | $T_A$ = +25°C | Unit |
|---|---|---|---|---|---|
| | | | | Typ | |
| $C_{IN}$ | Input Capacitance | | | 2 | pF |
| $C_{I/O}$ | Input/Output Capacitance | | | 4 | pF |
| $C_{PD}$ | Power Dissipation Capacitance | $V_I$ = 0 V or $V_{CC1}$, f = 10 MHz, $V_{CC}$ / $V_{CC1}$ = 3.6 V | 1.0 to 3.60 | 8 | pF |

### Translator Power−up Sequence Recommendations

To ensure that the system does not experience unnecessary $I_{CC}$ current draw, bus contention, or oscillations during power−up; adhere to the following guidelines. This device is designed with the output pin(s) supplied by $V_{CC}$ and the input pin(s) supplied by $V_{CC1}$. The first recommendation is to begin by powering up the input side of the device with $V_{CC1}$. The Input pin(s) should be ramped with or ahead of $V_{CC1}$ or held LOW. This guards against bus contentions and oscillations as all inputs and the input $V_{CC1}$ are powered at the same time. The output $V_{CC}$ can then be powered to the target voltage level to which the device will translate. The output pin(s) then translate to logic levels dictated by the output $V_{CC}$ levels.

Upon completion of these steps, the device can be configured for the desired operation. Following these steps helps prevent possible damage to the translator device as well as other system components

### AC Loadings and Waveforms

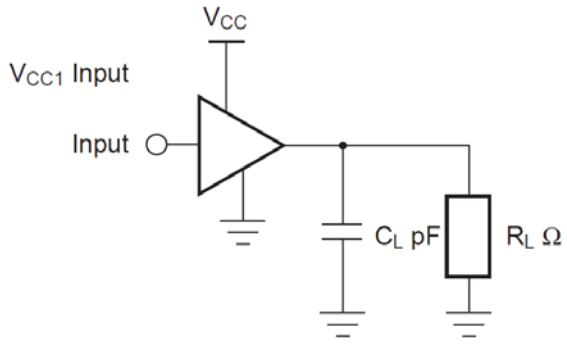


**Figure 3. AC Test Circuit**

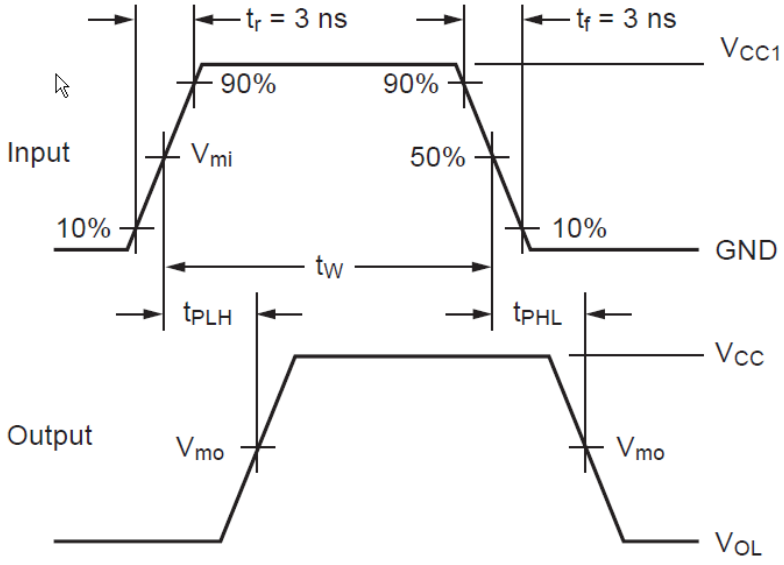


**Figure 4. Waveform for Inverting and Non-Inverting Functions**

**Table 1. AC LOAD TABLE**

| Symbol | $V_{CC}$ | | | | | |
|---|---|---|---|---|---|---|
| | 3.3 V ±0.3 V | 2.5 V ±0.2 V | 1.8 V ±0.15 V | 1.5 V ±0.10 V | 1.2 V ±0.10 V | 1.0 V |
| $V_{mi}$ | 1.5V | $V_{CC1}/2$ | $V_{CC1}/2$ | $V_{CC1}/2$ | $V_{CC1}/2$ | $V_{CC1}/2$ |
| $V_{mo}$ | 1.5V | $V_{CC}/2$ | $V_{CC}/2$ | $V_{CC}/2$ | $V_{CC}/2$ | $V_{CC}/2$ |

## ORDERING INFORMATION

| Part Number | Top Mark | Package Type | Shipping† |
|---|---|---|---|
| FXLP34P5X | X34 | 5−Lead SC70, EIAJ SC−88a, 1.25 mm Wide (Pb−Free) | 3000 / Tape & Reel |
| FXLP34L6X | X3 | SIP6, 6−Lead MicroPak, 1.00 mm Wide (Pb−Free) | 5000 / Tape & Reel |
| FXLP34FHX | X3 | UDFN6, 6−Lead, MicroPak2, 1x1 mm Body, .35 mm Pitch (Pb−Free) | 5000 / Tape & Reel |

†For information on tape and reel specifications, including part orientation and tape sizes, please refer to our Tape and Reel Packaging Specifications Brochure, BRD8011/D.

MicroPak and MicroPak2 are trademarks of Semiconductor Components Industries, LLC dba “**onsemi**” or its affiliates and/or subsidiaries in the United States and/or other countries.

# MECHANICAL CASE OUTLINE
## PACKAGE DIMENSIONS

ON Semiconductor®

**SIP6 1.45X1.0**
CASE 127EB
ISSUE O

DATE 31 AUG 2016

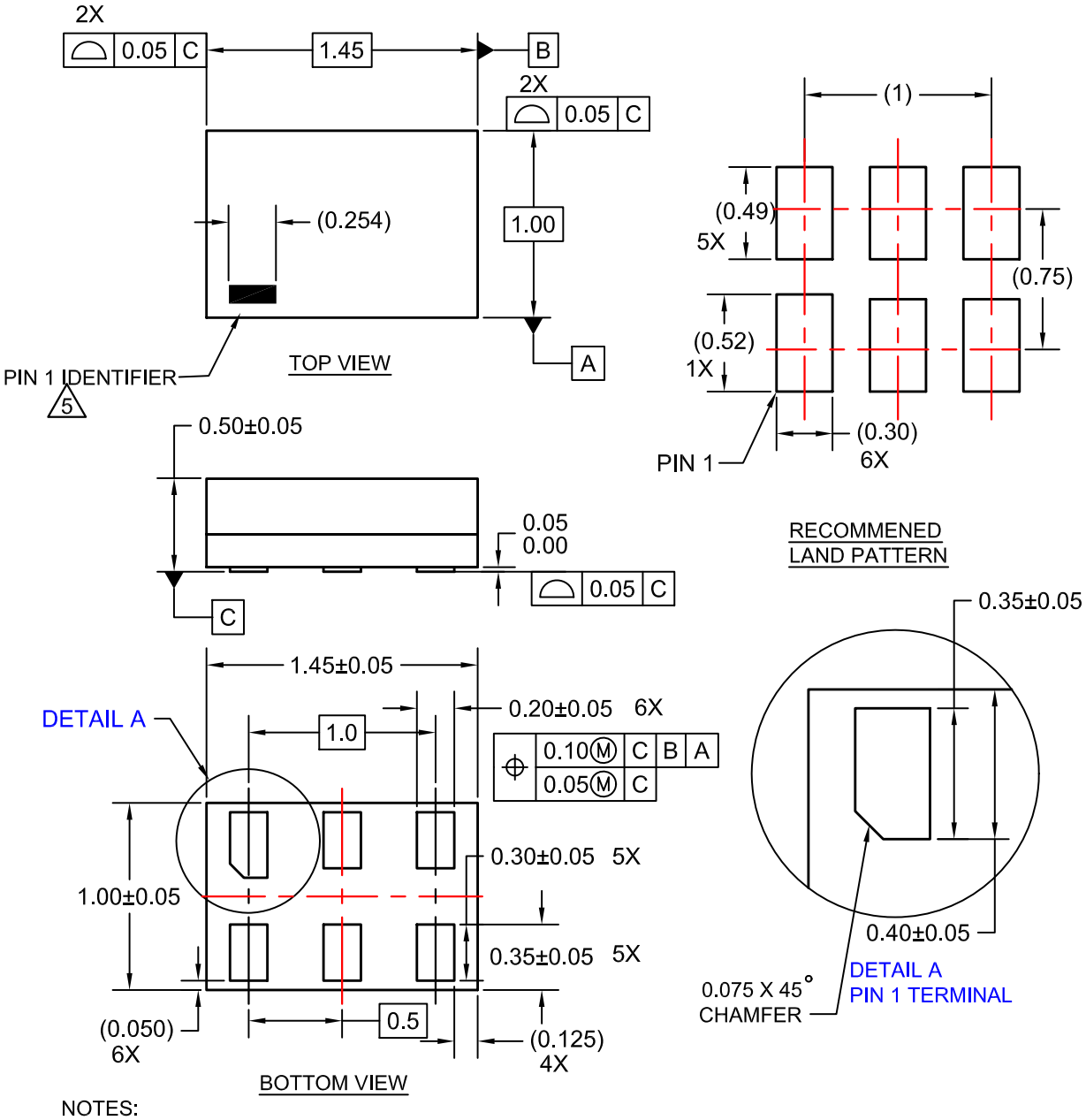


NOTES:

1. CONFORMS TO JEDEC STANDARD MO-252 VARIATION UAAD
2. DIMENSIONS ARE IN MILLIMETERS
3. DRAWING CONFORMS TO ASME Y14.5M-2009
4. PIN ONE IDENTIFIER IS 2X LENGTH OF ANY OTHER LINE IN THE MARK CODE LAYOUT.

| | | |
|---|---|---|
| **DOCUMENT NUMBER:** | **98AON13590G** | Electronic versions are uncontrolled except when accessed directly from the Document Repository. Printed versions are uncontrolled except when stamped "CONTROLLED COPY" in red. |
| **DESCRIPTION:** | **SIP6 1.45X1.0** | **PAGE 1 OF 1** |


ON Semiconductor and ON are trademarks of Semiconductor Components Industries, LLC dba ON Semiconductor or its subsidiaries in the United States and/or other countries. ON Semiconductor reserves the right to make changes without further notice to any products herein. ON Semiconductor makes no warranty, representation or guarantee regarding the suitability of its products for any particular purpose, nor does ON Semiconductor assume any liability arising out of the application or use of any product or circuit, and specifically disclaims any and all liability, including without limitation special, consequential or incidental damages. ON Semiconductor does not convey any license under its patent rights nor the rights of others.

**SC−88A (SC−70 5 Lead), 1.25x2**
CASE 419AC−01
ISSUE A

DATE 29 JUN 2010

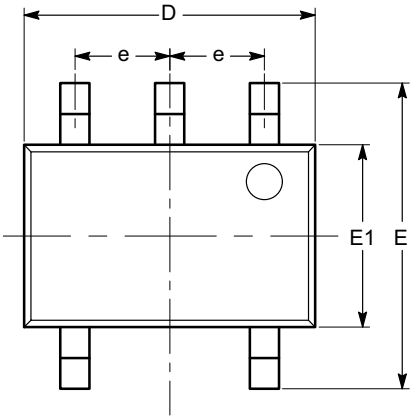


**TOP VIEW**

| SYMBOL | MIN | NOM | MAX |
|---|---|---|---|
| A | 0.80 | | 1.10 |
| A1 | 0.00 | | 0.10 |
| A2 | 0.80 | | 1.00 |
| b | 0.15 | | 0.30 |
| c | 0.10 | | 0.18 |
| D | 1.80 | 2.00 | 2.20 |
| E | 1.80 | 2.10 | 2.40 |
| E1 | 1.15 | 1.25 | 1.35 |
| e | | 0.65 BSC | |
| L | 0.26 | 0.36 | 0.46 |
| L1 | | 0.42 REF | |
| L2 | | 0.15 BSC | |
| θ | 0° | | 8° |
| θ1 | 4° | | 10° |

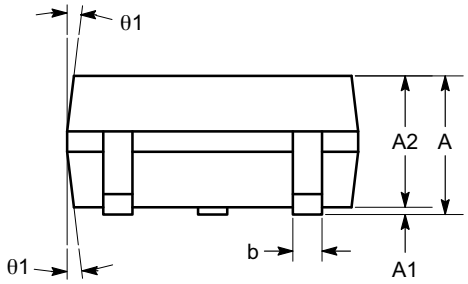


**SIDE VIEW**

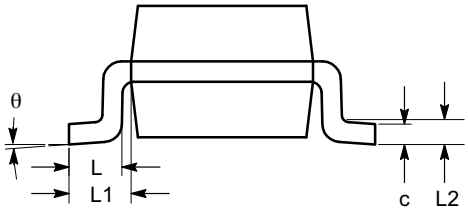


**END VIEW**

**Notes:**
(1) All dimensions are in millimeters. Angles in degrees.
(2) Complies with JEDEC MO-203.

| DOCUMENT NUMBER: | 98AON34260E | Electronic versions are uncontrolled except when accessed directly from the Document Repository. Printed versions are uncontrolled except when stamped "CONTROLLED COPY" in red. |
|---|---|---|
| DESCRIPTION: | SC−88A (SC−70 5 LEAD), 1.25X2 | PAGE 1 OF 1 |

**onsemi** and ONSEMI are trademarks of Semiconductor Components Industries, LLC dba **onsemi** or its subsidiaries in the United States and/or other countries. **onsemi** reserves the right to make changes without further notice to any products herein. **onsemi** makes no warranty, representation or guarantee regarding the suitability of its products for any particular purpose, nor does **onsemi** assume any liability arising out of the application or use of any product or circuit, and specifically disclaims any and all liability, including without limitation special, consequential or incidental damages. **onsemi** does not convey any license under its patent rights nor the rights of others.

© Semiconductor Components Industries, LLC, 2008

**UDFN6 1.0X1.0, 0.35P**
CASE 517DP
ISSUE O

DATE 31 AUG 2016

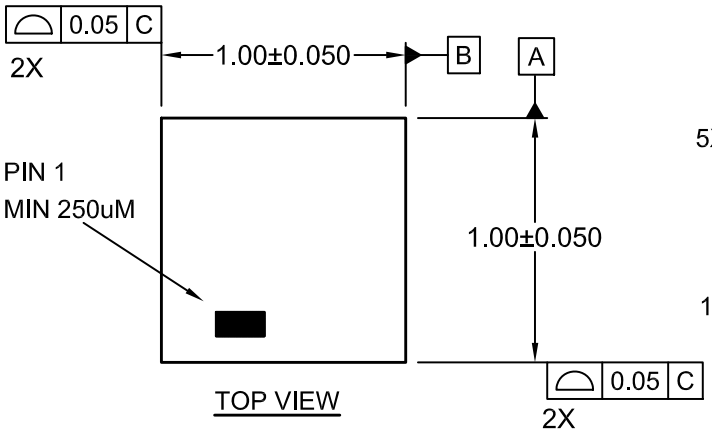


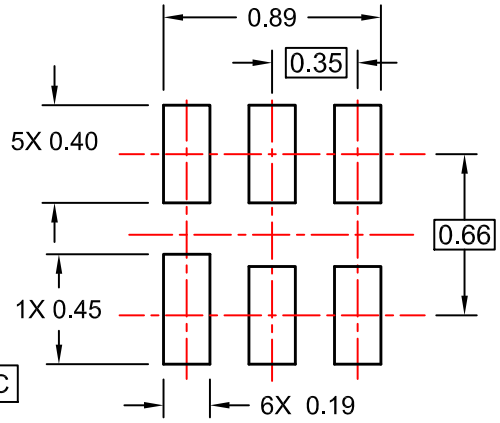


RECOMMENDED LAND PATTERN
FOR SPACE CONSTRAINED PCB

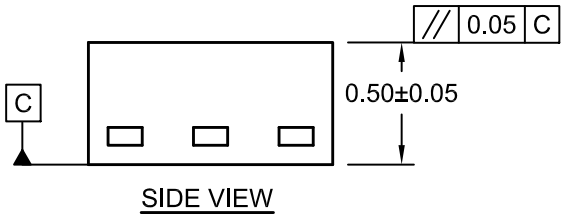


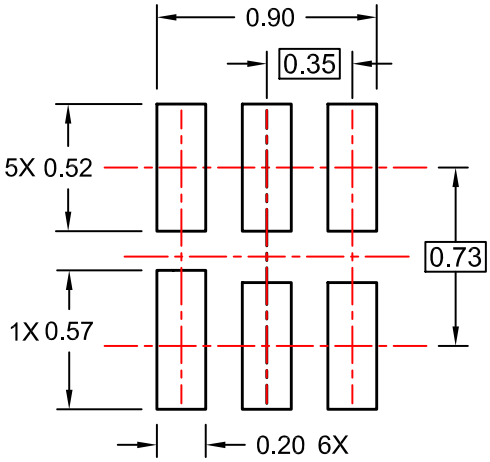


ALTERNATIVE LAND PATTERN
FOR UNIVERSAL APPLICATION

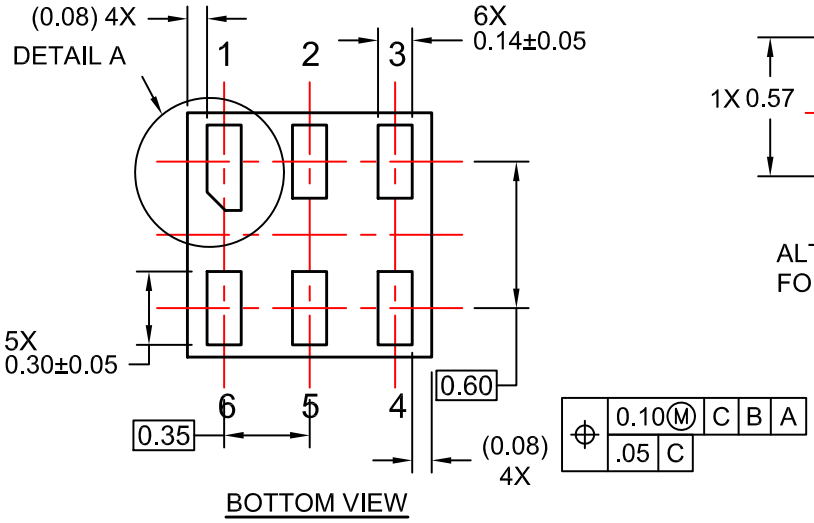


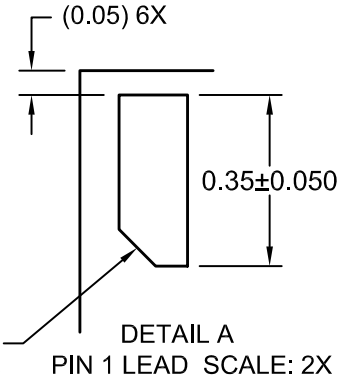


NOTES:

A. COMPLIES TO JEDEC MO-252 STANDARD
B. DIMENSIONS ARE IN MILLIMETERS.
C. DIMENSIONS AND TOLERANCES PER ASME Y14.5M, 2009

| | | |
|---|---|---|
| **DOCUMENT NUMBER:** | **98AON13593G** | Electronic versions are uncontrolled except when accessed directly from the Document Repository. Printed versions are uncontrolled except when stamped "CONTROLLED COPY" in red. |
| **DESCRIPTION:** | **UDFN6 1.0X1.0, 0.35P** | **PAGE 1 OF 1** |

ON Semiconductor and ON are trademarks of Semiconductor Components Industries, LLC dba ON Semiconductor or its subsidiaries in the United States and/or other countries. ON Semiconductor reserves the right to make changes without further notice to any products herein. ON Semiconductor makes no warranty, representation or guarantee regarding the suitability of its products for any particular purpose, nor does ON Semiconductor assume any liability arising out of the application or use of any product or circuit, and specifically disclaims any and all liability, including without limitation special, consequential or incidental damages. ON Semiconductor does not convey any license under its patent rights nor the rights of others.

© Semiconductor Components Industries, LLC, 2019

**onsemi**, , and other names, marks, and brands are registered and/or common law trademarks of Semiconductor Components Industries, LLC dba "**onsemi**" or its affiliates and/or subsidiaries in the United States and/or other countries. **onsemi** owns the rights to a number of patents, trademarks, copyrights, trade secrets, and other intellectual property. A listing of **onsemi**'s product/patent coverage may be accessed at www.onsemi.com/site/pdf/Patent−Marking.pdf. **onsemi** reserves the right to make changes at any time to any products or information herein, without notice. The information herein is provided "as−is" and **onsemi** makes no warranty, representation or guarantee regarding the accuracy of the information, product features, availability, functionality, or suitability of its products for any particular purpose, nor does **onsemi** assume any liability arising out of the application or use of any product or circuit, and specifically disclaims any and all liability, including without limitation special, consequential or incidental damages. Buyer is responsible for its products and applications using **onsemi** products, including compliance with all laws, regulations and safety requirements or standards, regardless of any support or applications information provided by **onsemi**. "Typical" parameters which may be provided in **onsemi** data sheets and/or specifications can and do vary in different applications and actual performance may vary over time. All operating parameters, including "Typicals" must be validated for each customer application by customer's technical experts. **onsemi** does not convey any license under any of its intellectual property rights nor the rights of others. **onsemi** products are not designed, intended, or authorized for use as a critical component in life support systems or any FDA Class 3 medical devices or medical devices with a same or similar classification in a foreign jurisdiction or any devices intended for implantation in the human body. Should Buyer purchase or use **onsemi** products for any such unintended or unauthorized application, Buyer shall indemnify and hold **onsemi** and its officers, employees, subsidiaries, affiliates, and distributors harmless against all claims, costs, damages, and expenses, and reasonable attorney fees arising out of, directly or indirectly, any claim of personal injury or death associated with such unintended or unauthorized use, even if such claim alleges that **onsemi** was negligent regarding the design or manufacture of the part. **onsemi** is an Equal Opportunity/Affirmative Action Employer. This literature is subject to all applicable copyright laws and is not for resale in any manner.

## ADDITIONAL INFORMATION

**TECHNICAL PUBLICATIONS**:
**Technical Library:** www.onsemi.com/design/resources/technical−documentation
**onsemi Website:** www.onsemi.com

**ONLINE SUPPORT**: www.onsemi.com/support
**For additional information, please contact your local Sales Representative at** www.onsemi.com/support/sales