PNP Epitaxial Silicon Transistor

KSA992

Features

- Audio Frequency Low−Noise Amplifier
- Complement to KSC1845
- These are Pb−Free Devices

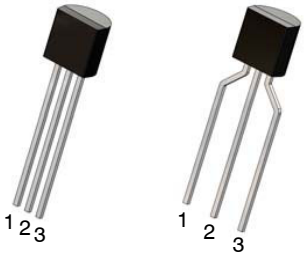

1. Emitter
2. Collector
3. Base

TO−92 3 4.825x4.76 CASE 135AN

TO−92 3 4.83x4.76 LEADFORMED CASE 135AR

MAXIMUM RATINGS (Values are at T_A = 25°C unless otherwise noted.)

Symbol	Parameter	Value	Unit
V_{CBO}	Collector−Base Voltage	−120	V
V_{CEO}	Collector−Emitter Voltage	−120	V
V_{EBO}	Emitter−Base Voltage	−5	V
I_C	Collector Current	−50	mA
I_B	Base Current	−10	mA
T_J	Junction Temperature	150	°C
T_{STG}	Storage Temperature	−55 to 150	°C

Stresses exceeding those listed in the Maximum Ratings table may damage the device. If any of these limits are exceeded, device functionality should not be assumed, damage may occur and reliability may be affected.

THERMAL CHARACTERISTICS

(Values are at T_A = 25°C unless otherwise noted.) (Note 1)

Symbol	Parameter	Value	Unit
P_D	Power Dissipation	500	mW
	Derate Above 25°C	4	mW/°C
$R_{\theta JA}$	Thermal Resistance, Junction−to−Ambient	250	°C/W

1. PCB size: FR−4, 76 mm x 114 mm x 1.57 mm (3.0 inch x 4.5 inch x 0.062 inch) with minimum land pattern size.

MARKING DIAGRAMS

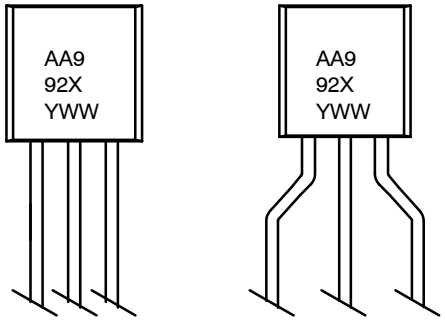

A = Assembly Code
A992 = Device Code
X = F / FA / FB
YWW = Date Code

ORDERING INFORMATION

Device	Package	Shipping
KSA992FBU	TO−92 3 (Pb−Free)	10000 Units / Bulk Bag
KSA992FTA	TO−92 3 LF (Pb−Free)	2000 / Fan−Fold
KSA992FATA	TO−92 3 LF (Pb−Free)	2000 / Fan−Fold
KSA992FBTA	TO−92 3 LF (Pb−Free)	2000 / Fan−Fold

© Semiconductor Components Industries, LLC, 2004

ELECTRICAL CHARACTERISTICS (Values are at T_A = 25°C unless otherwise noted.)

Symbol	Parameter	Conditions	Min	Typ	Max	Unit
I_{CBO}	Collector Cut−Off Current	V_{CB} = −120 V, I_E = 0	–	–	−50	nA
I_{CEO}	Collector Cut−Off Current	V_{CE} = −100 V, I_B = 0	–	–	−1	μA
I_{EBO}	Emitter Cut−Off Current	V_{EB} = −5 V, I_C = 0	–	–	−50	nA
h_{FE1}	DC Current Gain	V_{CE} = −6 V, I_C = −0.1 mA	150	500	–	
h_{FE2}		V_{CE} = −6 V, I_C = −1 mA	300	450	600	
V_{BE}(on)	Base−Emitter On Voltage	V_{CE} = −6 V, I_C = −1 mA	−0.55	−0.61	−0.65	V
V_{CE}(sat)	Collector−Emitter Saturation Voltage	I_C = −10 mA, I_B = −1 mA	–	−0.09	−0.30	V
f_T	Current Gain Bandwidth Product	V_{CE} = −6 V, I_C = −1 mA	50	100	–	MHz
C_{ob}	Output Capacitance	V_{CB} = −30 V, I_E = 0, f = 1 MHz	–	2	3	pF
NF	Noise Figure	V_{CE} = −5 V, I_C = −1.0 mA, R_S = 100 kΩ, f = 1 kHz	–	7	–	dB

Product parametric performance is indicated in the Electrical Characteristics for the listed test conditions, unless otherwise noted. Product performance may not be indicated by the Electrical Characteristics if operated under different conditions.

h_{FE} CLASSIFICATION

Classification	F	FA	FB
h_{FE2}	300~600	300~470	430~600

TYPICAL PERFORMANCE CHARACTERISTICS

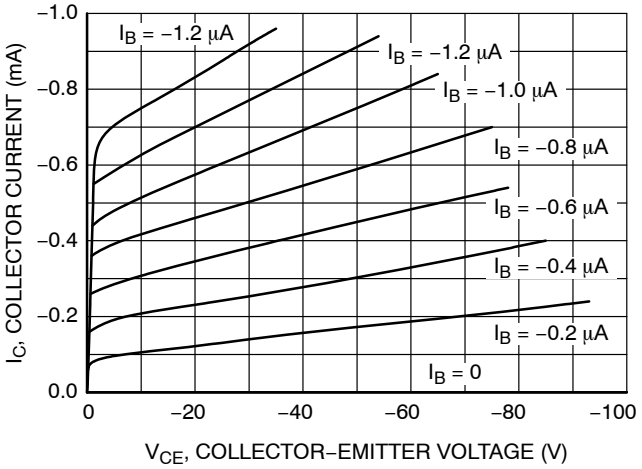

Figure 1. Static Characteristic

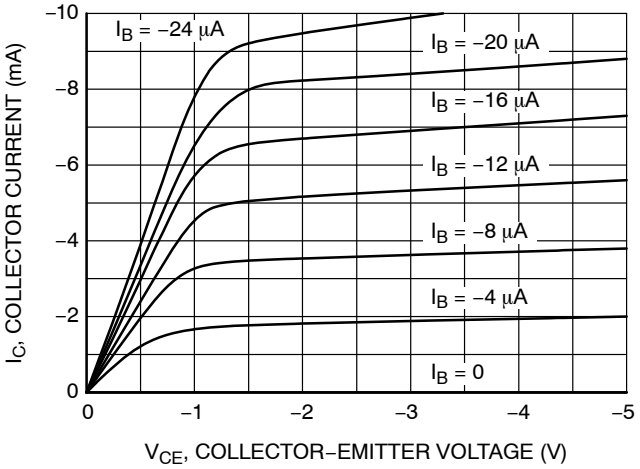

Figure 2. Static Characteristic

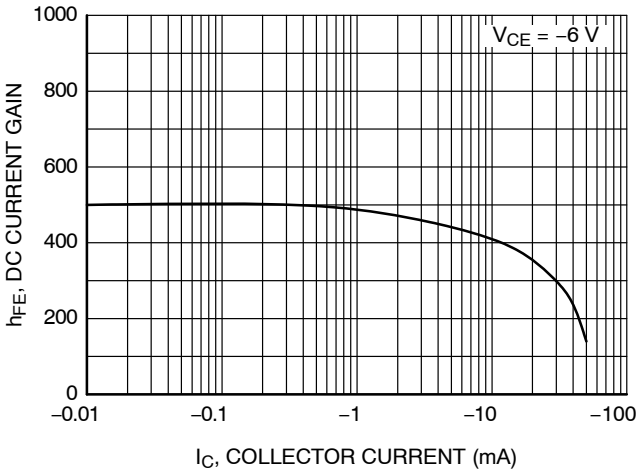

Figure 3. DC Current Gain

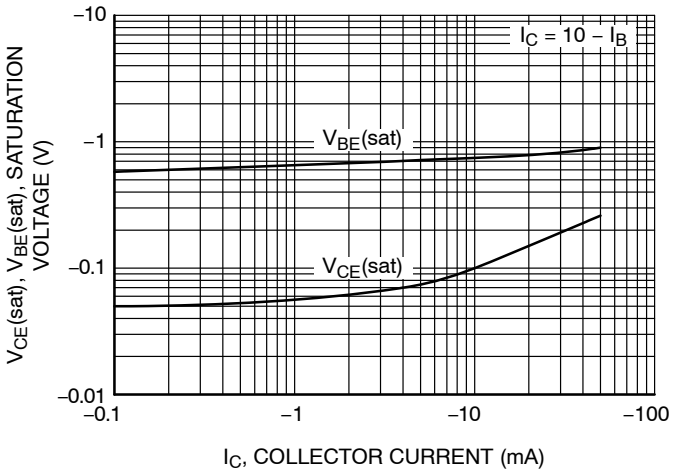

Figure 4. Base−Emitter Saturation Voltage and Collector−Emitter Saturation Voltage

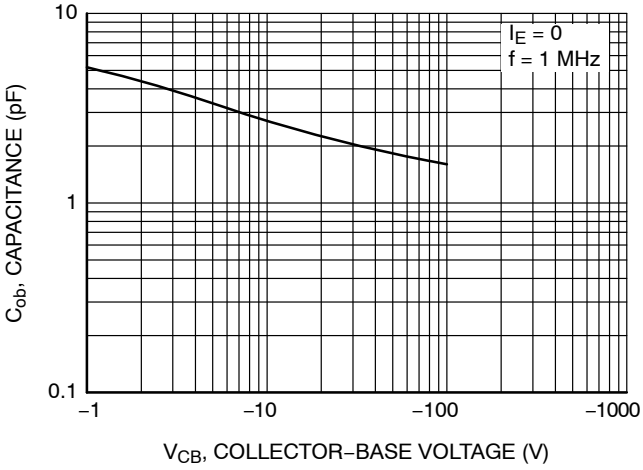

Figure 5. Collector Output Capacitance

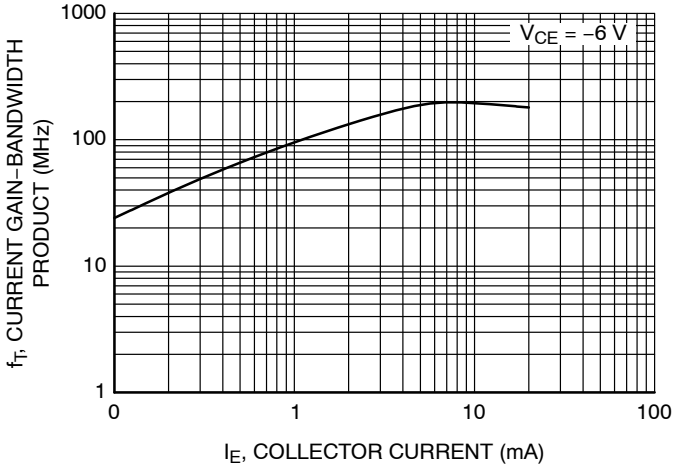

Figure 6. Current Gain Bandwidth Product

TYPICAL PERFORMANCE CHARACTERISTICS (Continued)

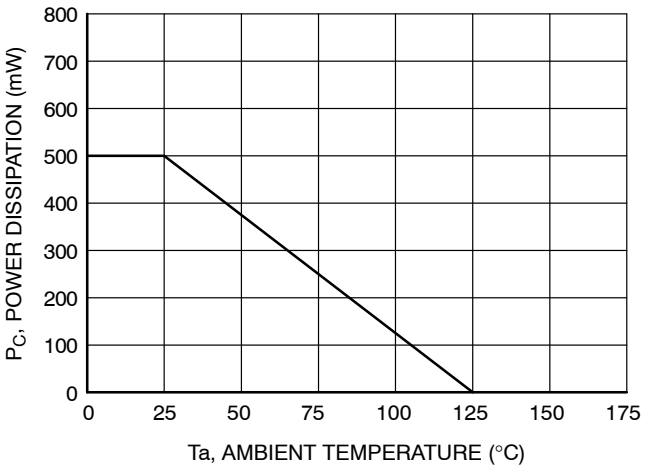

Figure 7. Power Derating

MECHANICAL CASE OUTLINE
PACKAGE DIMENSIONS

ON Semiconductor®

TO−92 3 4.825x4.76
CASE 135AN
ISSUE O

DATE 31 JUL 2016

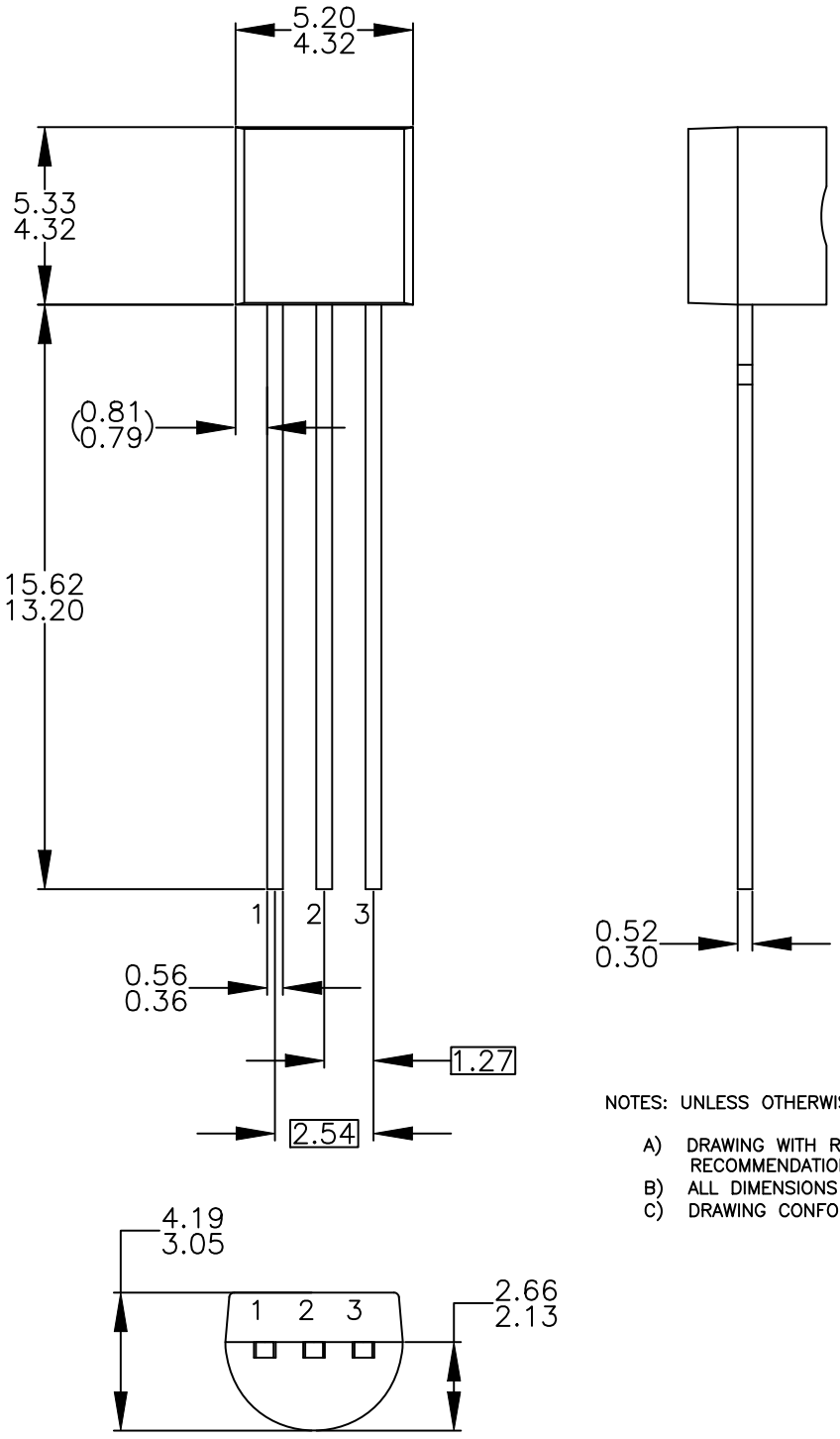

NOTES: UNLESS OTHERWISE SPECIFIED

A) DRAWING WITH REFERENCE TO JEDEC TO−92 RECOMMENDATIONS.
B) ALL DIMENSIONS ARE IN MILLIMETERS.
C) DRAWING CONFORMS TO ASME Y14.5M−2009.

DOCUMENT NUMBER:	**98AON13880G**	Electronic versions are uncontrolled except when accessed directly from the Document Repository. Printed versions are uncontrolled except when stamped "CONTROLLED COPY" in red.
DESCRIPTION:	**TO−92 3 4.825X4.76**	**PAGE 1 OF 1**

ON Semiconductor and ON are trademarks of Semiconductor Components Industries, LLC dba ON Semiconductor or its subsidiaries in the United States and/or other countries. ON Semiconductor reserves the right to make changes without further notice to any products herein. ON Semiconductor makes no warranty, representation or guarantee regarding the suitability of its products for any particular purpose, nor does ON Semiconductor assume any liability arising out of the application or use of any product or circuit, and specifically disclaims any and all liability, including without limitation special, consequential or incidental damages. ON Semiconductor does not convey any license under its patent rights nor the rights of others.

© Semiconductor Components Industries, LLC, 2019

MECHANICAL CASE OUTLINE
PACKAGE DIMENSIONS

ON Semiconductor®

TO−92 3 4.83x4.76 LEADFORMED
CASE 135AR
ISSUE O

DATE 30 SEP 2016

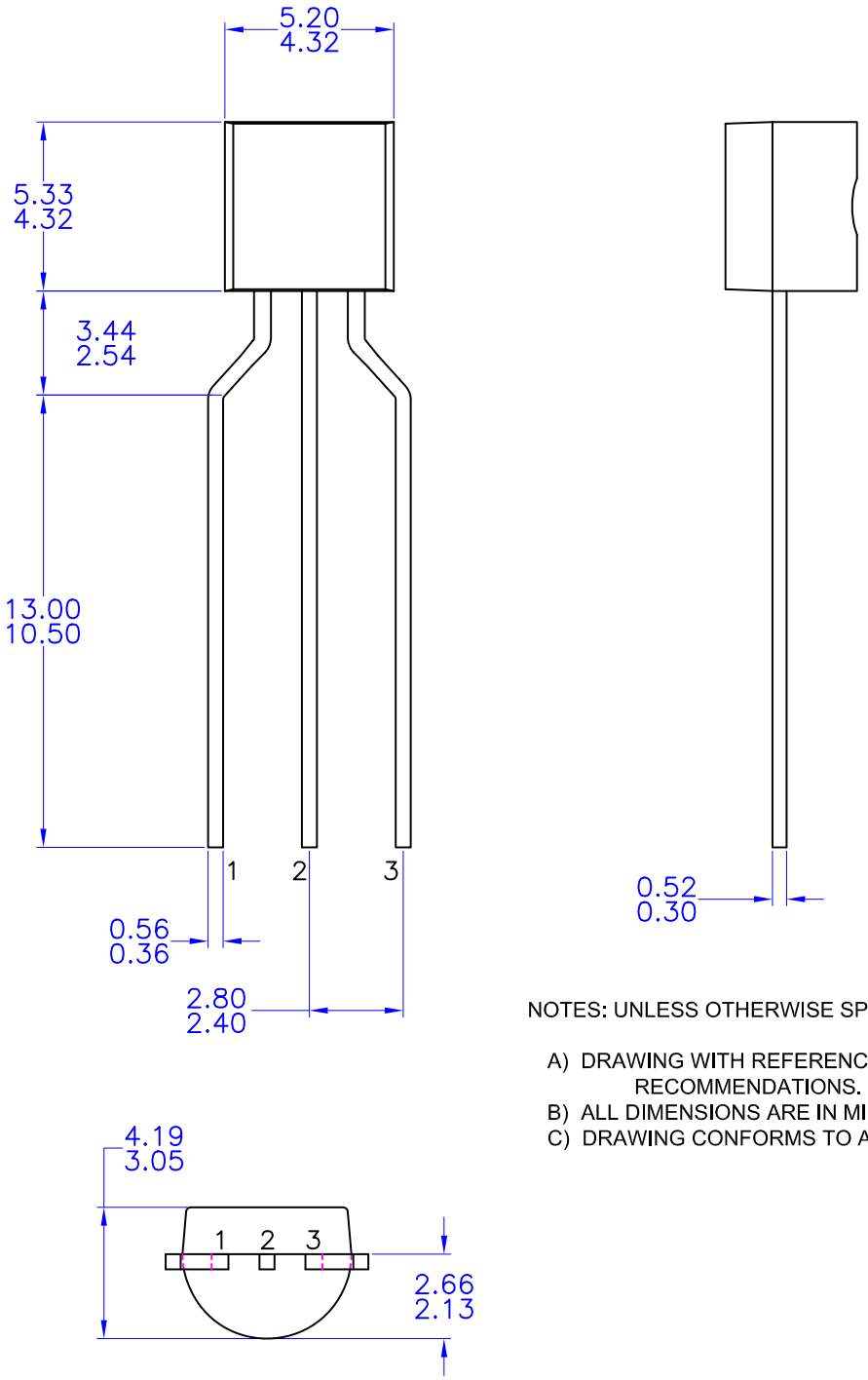

NOTES: UNLESS OTHERWISE SPECIFIED

A) DRAWING WITH REFERENCE TO JEDEC TO-92 RECOMMENDATIONS.
B) ALL DIMENSIONS ARE IN MILLIMETERS.
C) DRAWING CONFORMS TO ASME Y14.5M-1994

DOCUMENT NUMBER:	**98AON13879G**	Electronic versions are uncontrolled except when accessed directly from the Document Repository. Printed versions are uncontrolled except when stamped "CONTROLLED COPY" in red.	
DESCRIPTION:	**TO−92 3 4.83X4.76 LEADFORMED**		**PAGE 1 OF 1**

ON Semiconductor and ON are trademarks of Semiconductor Components Industries, LLC dba ON Semiconductor or its subsidiaries in the United States and/or other countries. ON Semiconductor reserves the right to make changes without further notice to any products herein. ON Semiconductor makes no warranty, representation or guarantee regarding the suitability of its products for any particular purpose, nor does ON Semiconductor assume any liability arising out of the application or use of any product or circuit, and specifically disclaims any and all liability, including without limitation special, consequential or incidental damages. ON Semiconductor does not convey any license under its patent rights nor the rights of others.

© Semiconductor Components Industries, LLC, 2019

onsemi, , and other names, marks, and brands are registered and/or common law trademarks of Semiconductor Components Industries, LLC dba "**onsemi**" or its affiliates and/or subsidiaries in the United States and/or other countries. **onsemi** owns the rights to a number of patents, trademarks, copyrights, trade secrets, and other intellectual property. A listing of **onsemi**'s product/patent coverage may be accessed at www.onsemi.com/site/pdf/Patent−Marking.pdf. **onsemi** reserves the right to make changes at any time to any products or information herein, without notice. The information herein is provided "as−is" and **onsemi** makes no warranty, representation or guarantee regarding the accuracy of the information, product features, availability, functionality, or suitability of its products for any particular purpose, nor does **onsemi** assume any liability arising out of the application or use of any product or circuit, and specifically disclaims any and all liability, including without limitation special, consequential or incidental damages. Buyer is responsible for its products and applications using **onsemi** products, including compliance with all laws, regulations and safety requirements or standards, regardless of any support or applications information provided by **onsemi**. "Typical" parameters which may be provided in **onsemi** data sheets and/or specifications can and do vary in different applications and actual performance may vary over time. All operating parameters, including "Typicals" must be validated for each customer application by customer's technical experts. **onsemi** does not convey any license under any of its intellectual property rights nor the rights of others. **onsemi** products are not designed, intended, or authorized for use as a critical component in life support systems or any FDA Class 3 medical devices or medical devices with a same or similar classification in a foreign jurisdiction or any devices intended for implantation in the human body. Should Buyer purchase or use **onsemi** products for any such unintended or unauthorized application, Buyer shall indemnify and hold **onsemi** and its officers, employees, subsidiaries, affiliates, and distributors harmless against all claims, costs, damages, and expenses, and reasonable attorney fees arising out of, directly or indirectly, any claim of personal injury or death associated with such unintended or unauthorized use, even if such claim alleges that **onsemi** was negligent regarding the design or manufacture of the part. **onsemi** is an Equal Opportunity/Affirmative Action Employer. This literature is subject to all applicable copyright laws and is not for resale in any manner.

ADDITIONAL INFORMATION

TECHNICAL PUBLICATIONS:
Technical Library: www.onsemi.com/design/resources/technical−documentation
onsemi Website: www.onsemi.com

ONLINE SUPPORT: www.onsemi.com/support
For additional information, please contact your local Sales Representative at www.onsemi.com/support/sales