Ordering number : ENA2028

LA6581MC

Monolithic Linear IC

Fan Motor Driver

BTL Driver Single-Phase Full-Wave

ON Semiconductor®

http://onsemi.com

Overview

The LA6581MC is a low-saturation BTL output linear driving motor driver for single-phase bipolar fan motors. It features quite, low power, high efficiency drive that suppresses reactive current. It is optimal for use in applications that require miniaturization and low noise, such as CPU cooling fan motors and 5 to 12V electronic game products.

Functions

- Single-phase full-wave linear drive with BTL output (gain resistance 500Ω to 284kΩ, 55dB) : Suitable for the equipment requiring silent operation, such as game equipment, CPU cooler, etc. because of its freedom from switching noise.
- Low-voltage operation possible, with wide operable voltage range (3 to 16V)
- Low saturation output (Upper + lower saturation voltage : $V_O$sat (total) = 0.3V typ, I_O = 100mA) : High coil efficiency with low current drain. IC itself does not generate much heat.
- High impedance of Hall input pin
- FG output (rotation speed detection output : open collector output)
- Heat protection circuit : When the large current flows because of output short-circuit, raising the IC chip temperature above 180°C, the heat protection circuit suppresses the drive current, preventing IC burn and breakdown.

Specifications

Maximum Ratings at Ta = 25°C

Parameter	Symbol	Conditions	Ratings	Unit
Supply voltage	V_{CC} max		18	V
OUT output current	I_{OUT}1 max		0.40	A
	I_{OUT}2 max	T<200ms	0.50	A
OUT output withstand voltage	V_{OUT} max		18	V
FG output withstand	V_{FG} max		18	V
FG output current	I_{FG} max		5	mA
Allowable power dissipation	Pd max	Mounted on a specified board *1	750	mW
Operating temperature	Topr	*2	-30 to +100	°C
Storage temperature	Tstg		-55 to +150	°C

*1: Specified board: 114.3mm × 76.1mm ×1.6mm, glass epoxy board

*2: Tj = 150°C max must not be exceeded.

Caution 1) Absolute maximum ratings represent the value which cannot be exceeded for any length of time.

Caution 2) Even when the device is used within the range of absolute maximum ratings, as a result of continuous usage under high temperature, high current, high voltage, or drastic temperature change, the reliability of the IC may be degraded. Please contact us for the further details.

Stresses exceeding Maximum Ratings may damage the device. Maximum Ratings are stress ratings only. Functional operation above the Recommended Operating Conditions is not implied. Extended exposure to stresses above the Recommended Operating Conditions may affect device reliability.

Recommended Operating Conditions at Ta = 25°C

Parameter	Symbol	Conditions	Ratings	Unit
Supply voltage	V_{CC}		2.2 to 16	V
Common-phase input voltage range of Hall input	V_{ICM}		0.3 to V_{CC}-1.5	V

Electrical Characteristics at Ta = 25°C, V_{CC} = 12.0V, unless especially specified.

Parameter	Symbol	Conditions	Ratings			Unit
			min	Typ	Max	
Circuit Current	I_{CC}	IN^- = 5.8V, IN^+ = 6.0V, R_L = ∞		14	19	mA
OUT output low voltage	V_{OL}	I_O = 100mA		0.1	0.2	V
OUT output high voltage	V_{OH}	I_O = 100mA		0.1	0.2	V
Hall bias voltage	V_{HB}	RH = 360Ω +91Ω	1.85	1.95	2.05	V
Hall amplifier gain	Vg		52	55	58	dB
Hall amplifier input current	V_{INR}		-10	-2	+10	µA
FG output low voltage	V_{FG}	I_{FG} = 3mA		0.2	0.3	V
FG output leakage current	I_{FGL}	V_{FG} = 7V			30	µA
Thermal protection circuit	Th	* Design guarantee	150	180	200	°C

*: These values are design guarantee values, and are not tested.

Truth Table

IN^-	IN^+	OUT1	OUT2	FG	mode
H	L	H	L	L	During rotation
L	H	L	H	Off	
-	-	Off	Off	-	During overheat protection

Package Dimensions

unit : mm (typ)

3424

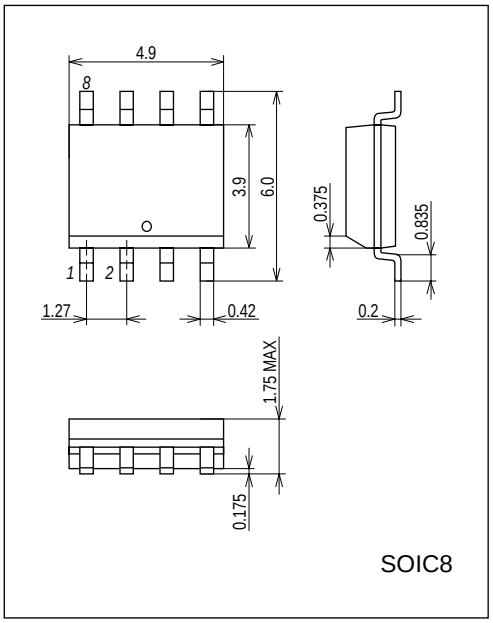

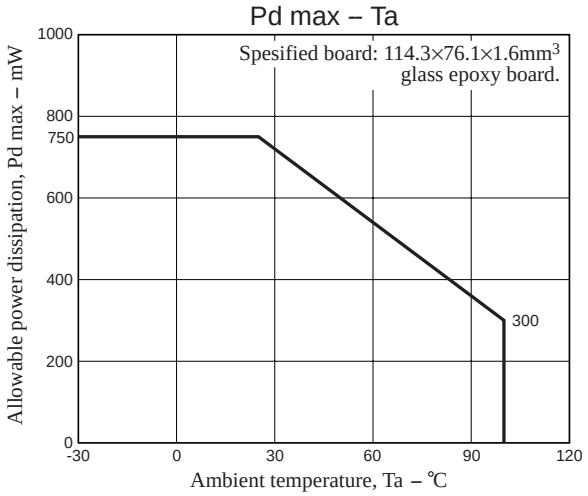

Pin Assignment

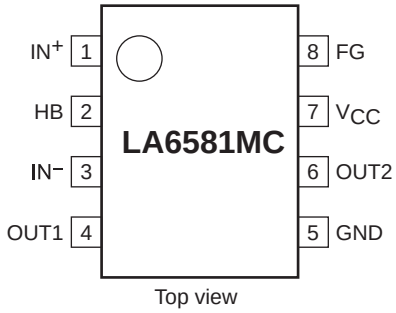

Block Diagram

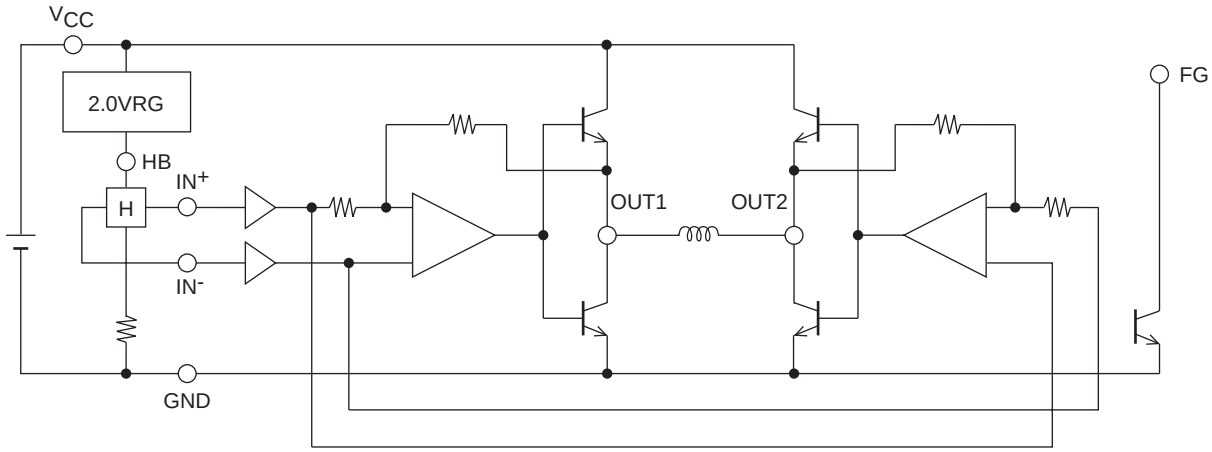

Timing Chart

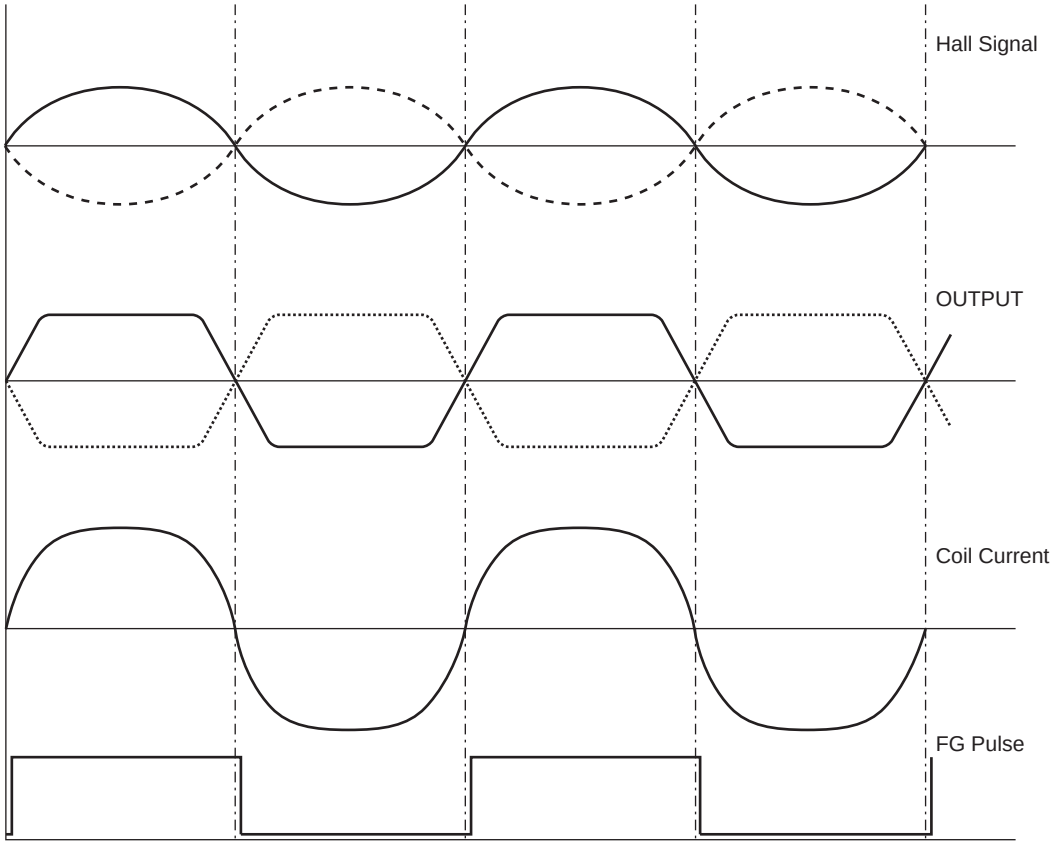

Application Circuit Example

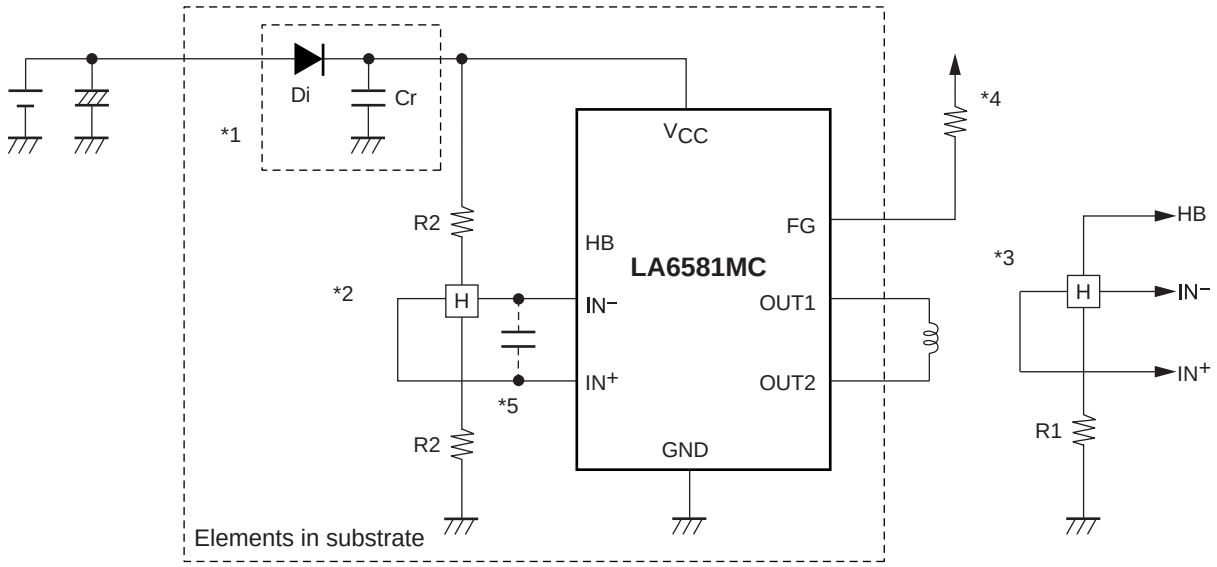

*1 : When Di to prevent breakdown in case of reverse connection is used, it is necessary to insert a capacitor Cr to secure the regenerative current route. Similarly, Cr is necessary to enhance the reliability when there is no capacitor near the fan power line.

*2 : To obtain Hall bias from V_{CC}, carry out $1/2 \times V_{CC}$ bias as shown in the figure. Linear driving is made through voltage control of the coil by amplifying the Hall output. When the Hall element output is large, the startup performance and efficiency are improved. Adjustment of the Hall element can reduce the noise further.

*3 : When the Hall bias is taken from the HB pin, constant-voltage bias is made with about 2.0V. Therefore, the Hall element can provide the output satisfactory in temperature characteristics. Adjustment of the Hall output amplitude is made with R1. (When V_{CC} = 12V, the step *2 above proves advantageous for IC heat generation.)

*4 : Keep this open when not used.

*5 : When the wiring from the Hall output to IC Hall input is long, noise may be carried through the wiring.

ON Semiconductor and the ON logo are registered trademarks of Semiconductor Components Industries, LLC (SCILLC). SCILLC owns the rights to a number of patents, trademarks, copyrights, trade secrets, and other intellectual property. A listing of SCILLC's product/patent coverage may be accessed at www.onsemi.com/site/pdf/Patent-Marking.pdf. SCILLC reserves the right to make changes without further notice to any products herein. SCILLC makes no warranty, representation or guarantee regarding the suitability of its products for any particular purpose, nor does SCILLC assume any liability arising out of the application or use of any product or circuit, and specifically disclaims any and all liability, including without limitation special, consequential or incidental damages. "Typical" parameters which may be provided in SCILLC data sheets and/or specifications can and do vary in different applications and actual performance may vary over time. All operating parameters, including "Typicals" must be validated for each customer application by customer's technical experts. SCILLC does not convey any license under its patent rights nor the rights of others. SCILLC products are not designed, intended, or authorized for use as components in systems intended for surgical implant into the body, or other applications intended to support or sustain life, or for any other application in which the failure of the SCILLC product could create a situation where personal injury or death may occur. Should Buyer purchase or use SCILLC products for any such unintended or unauthorized application, Buyer shall indemnify and hold SCILLC and its officers, employees, subsidiaries, affiliates, and distributors harmless against all claims, costs, damages, and expenses, and reasonable attorney fees arising out of, directly or indirectly, any claim of personal injury or death associated with such unintended or unauthorized use, even if such claim alleges that SCILLC was negligent regarding the design or manufacture of the part. SCILLC is an Equal Opportunity/Affirmative Action Employer. This literature is subject to all applicable copyright laws and is not for resale in any manner.