LA6583MC

Fan Motor Driver, BTL Driver Single-Phase Full-Wave

Monolithic Linear IC

Overview

The LA6583MC is a low-saturation BTL output linear driving motor driver for single-phase bipolar fan motors. It features quite, low power, high efficiency drive that suppresses ineffective current. It is optimal for use in applications that require miniaturization and low noise, such as CPU cooling fan motors and 5 to 12 V electronic game products.

Features

- Single-phase Full-wave Linear Drive with BTL Output (Gain Resistance 1 kΩ−360 kΩ): Most Appropriate for Consumer Appliances Power Supply, Namely Equipment that Requires Silence because this has No Switching Noise
- Low-voltage Operation Possible, with Wide Operable Voltage Range (2.8 to 13.8 V)
- Low Saturation Output (Upper + Lower Saturation Voltages: V_O sat (Total) = 1.1 V Typ, I_O = 200 mA): High Coil Efficiency and Small Current Drain. Small Heat Generation from IC itself
- Lock Protection and Auto Return Circuits Built-in
- Lock Protection Signal Output (L during Rotation, H at Stop; Open Collector Output)
- FG Output (Rotation Speed Detection Output: Open Collector Output)
- Hall Bias Built-in (VHB = 1.3 V)
- Heat Protection Circuit (Design Guarantee): When the Large Current Flows because of Output Short-circuit, Raising the IC Chip Temperature above 180°C, the Heat Protection Circuit Suppresses the Drive Current, Preventing IC Burn and Breakdown
- Compact and High Heat Capacity Package

ON Semiconductor®

www.onsemi.com

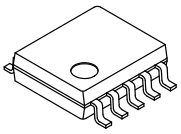

MFP10SK
CASE 751DA

MARKING DIAGRAM

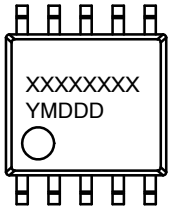

XXXX = Specific Device Code
Y = Year
M = Month
DDD = Additional Traceability Data

PIN ASSIGNMENT

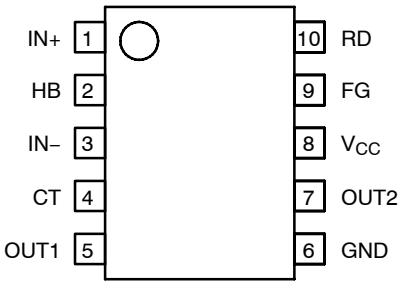

(Top View)

ORDERING INFORMATION

See detailed ordering and shipping information on page 5 of this data sheet.

© Semiconductor Components Industries, LLC, 2016

SPECIFICATIONS

ABSOLUTE MAXIMUM RATINGS (T_A = 25°C)

Symbol	Parameter	Conditions	Ratings	Unit
V_{CC} max	Supply Voltage		15	V
I_{OUT} max	Output Current		0.8	A
V_{OUT} max	Output Withstand Voltage		15	V
$V_{RD/FG}$ max	RD/FG Output Withstand		15	V
$I_{RD/FG}$ max	RD/FG Output Current		5	mA
I_B max	HB Output Current		10	mA
P_d max	Allowable Dissipation	Mounted on a specified board (Note 1)	800	mW
T_{opr}	Operating Temperature	(Note 2)	−30 to +100	°C
T_{stg}	Storage Temperature		−55 to +150	°C

Stresses exceeding those listed in the Maximum Ratings table may damage the device. If any of these limits are exceeded, device functionality should not be assumed, damage may occur and reliability may be affected.

1. Mounted on a specified board: 114.3 × 76.1 × 1.6 mm^3, glass epoxy board.
2. T_j = 150°C. Use this IC within a range where the chip temperature does not exceed T_j = 150°C during operation.

CAUTION: Absolute maximum ratings represent the value which cannot be exceeded for any length of time.

CAUTION: Even when the device is used within the range of absolute maximum ratings, as a result of continuous usage under high temperature, high current, high voltage, or drastic temperature change, the reliability of the IC may be degraded. Please contact us for the further details.

RECOMMENDED OPERATING CONDITIONS (T_A = 25°C)

Symbol	Parameter	Conditions	Min	Typ	Max	Unit
V_{CC}	Supply Voltage		2.8	–	14.0	V
V_{ICM}	Common-phase Input Voltage Range of Hall Input		0	–	V_{CC}–1.5	V

Functional operation above the stresses listed in the Recommended Operating Ranges is not implied. Extended exposure to stresses beyond the Recommended Operating Ranges limits may affect device reliability.

ELECTRICAL CHARACTERISTICS (T_A = 25°C, V_{CC} = 12 V, unless otherwise specified)

Symbol	Parameter	Conditions	Min	Typ	Max	Unit
$I_{CC}1$	Circuit Current	During drive (CT = L)	4	6	9	mA
$I_{CC}2$		At lock protection (CT = H)	2	4	6	mA
ICT1	Lock Detection Capacitor Charge Current		2.0	2.8	3.5	μA
ICT2	Capacitor Discharge Current		0.15	0.23	0.30	μA
RCT	Capacitor Charge/Discharge Current Ratio	RCT = ICT1/ICT2	9	12	15	–
VCT1	CT Charge Voltage		1.6	1.7	1.8	V
VCT2	CT Discharge Voltage		0.6	0.7	0.8	V
V_{OL}	OUT Output L Saturation Voltage	I_O = 200 mA	–	0.2	0.3	V
V_{OH}	OUT Output H Saturation Voltage	I_O = 200 mA	–	0.9	1.2	V
VHN	Hall Input Sensitivity	Zero peak value (Including offset and hysteresis)	–	7	15	mV
VRD/FG	RD/FG Output Pin L Voltage	IRD/FG = 5 mA	–	0.1	0.2	V
IRD/FGL	RD/FG Output Pin Leak Current	VRD/FG = 15 V	–	1	30	μA

ELECTRICAL CHARACTERISTICS (T_A = 25°C, V_{CC} = 12 V, unless otherwise specified) (continued)

Symbol	Parameter	Conditions	Min	Typ	Max	Unit
VHB	HB Output Voltage	IHB = 5 mA	1.3	1.5	1.7	V
TSD	Thermal Protection Circuit	Design target value (Note 3)	150	180	210	°C

Product parametric performance is indicated in the Electrical Characteristics for the listed test conditions, unless otherwise noted. Product performance may not be indicated by the Electrical Characteristics if operated under different conditions.

3. This is a design guarantee value and no measurement with an independent unit is made. Thermal protection circuit is built in this IC for the prevention of burnout of IC and thermal destruction. But, since the operation is outside the guarantee temperature range, thermal design must be made so that the thermal protection circuit is not activated during normal fan operation.

TRUTH TABLE

IN^-	IN^+	CT	OUT1	OUT2	FG	RD	Mode
H	L	L	H	L	L	L	During rotation
L	H		L	H	H		
–	–	H	OFF	OFF	–	H	Lock protection

NOTE: –: Don't care.

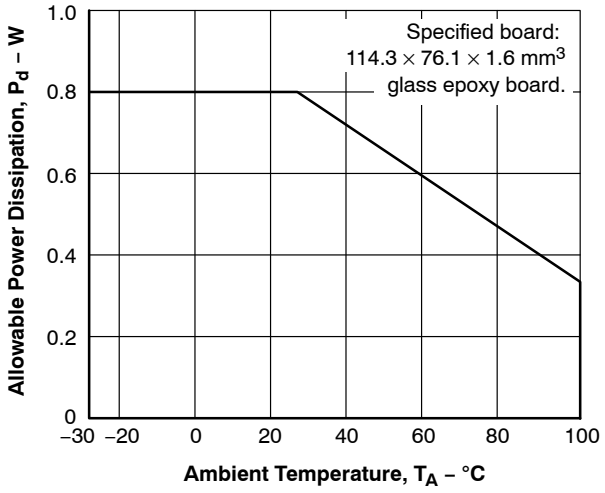

Figure 1. P_d max – T_A

BLOCK DIAGRAM

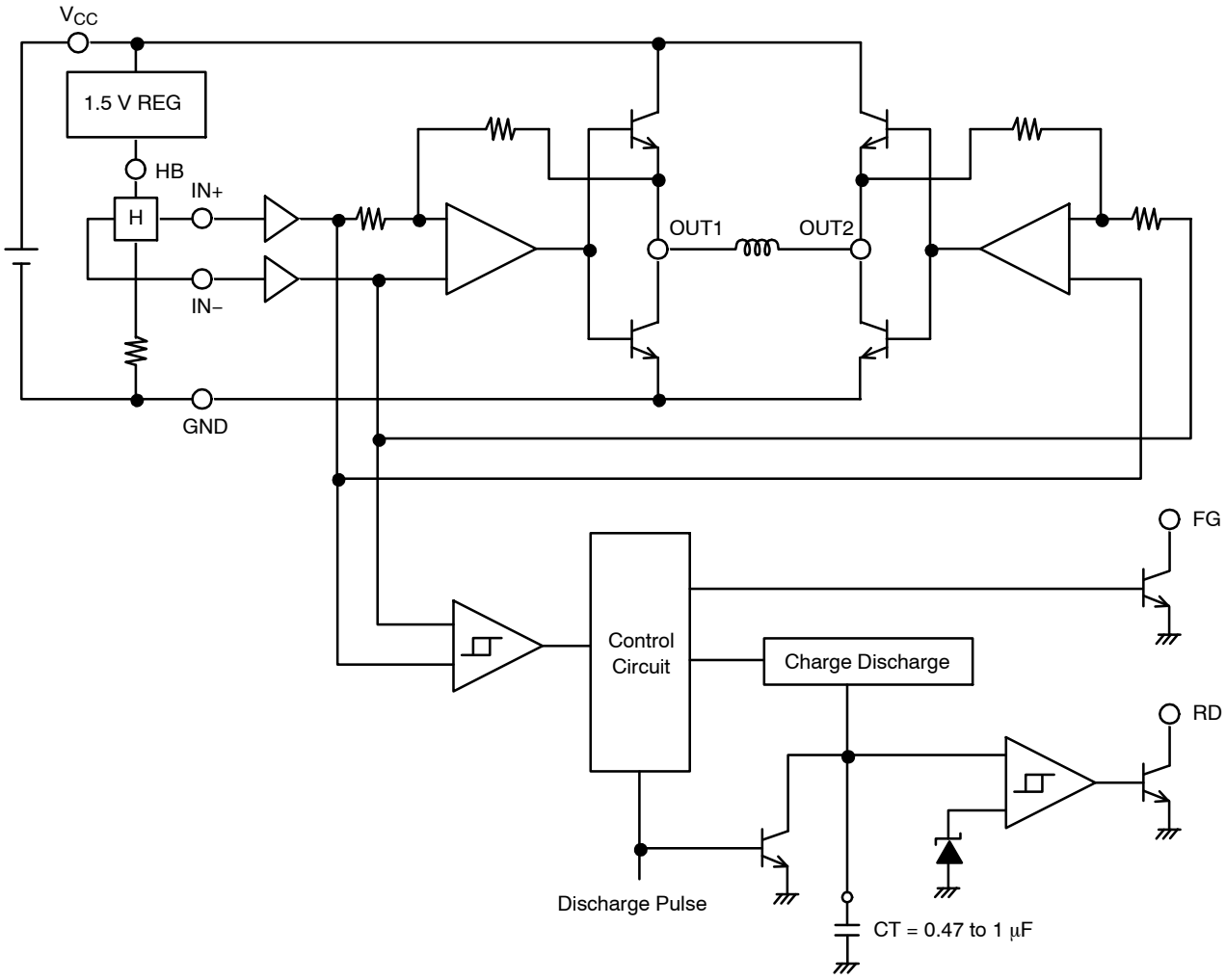

Figure 2. Internal Equivalent Circuit Diagram

APPLICATION CIRCUIT EXAMPLE

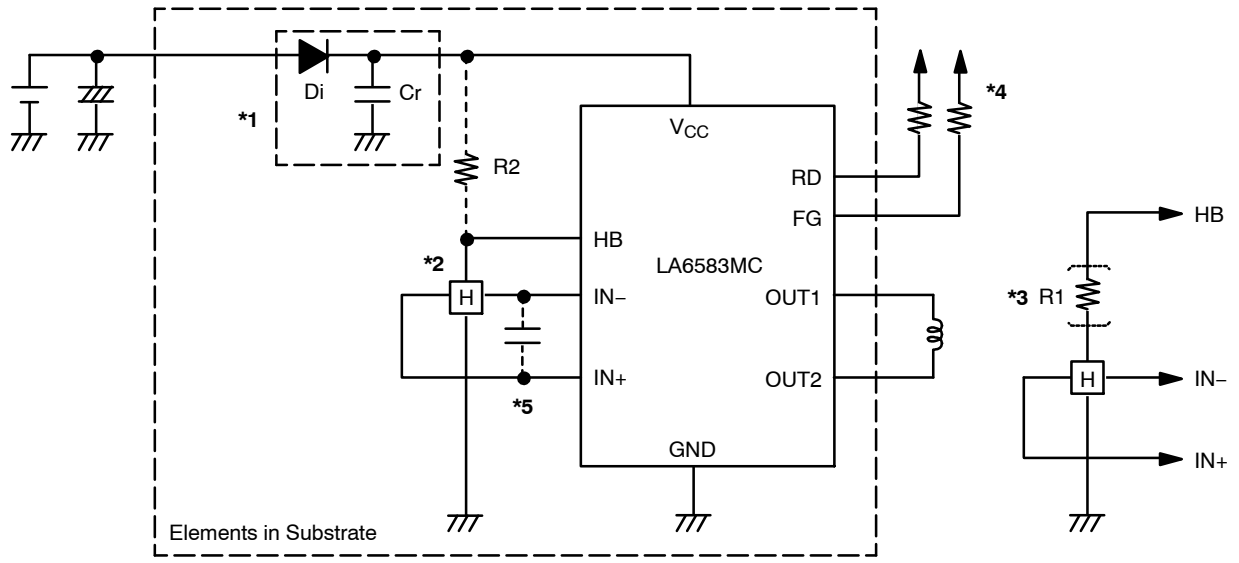

Figure 3. Application Circuit Example

*1: When Di to prevent breakdown in case of reverse connection is used, it is necessary to insert a capacitor Cr to secure the regenerative current route. Similarly, Cr is necessary to enhance the reliability when there is no capacitor near the fan power line.

*2: When the Hall bias is taken from the HB pin, constant-voltage bias is made with about 1.3 V. Therefore, the Hall output becomes the stable amplitude voltage satisfactory in temperature characteristics.
By inserting R2 to obtain the Hall bias from both V_{CC} and HB, as shown in the figure, heat generation of IC can be suppressed.

*3: In this IC, the Hall output amplitude is amplified to produce the drive waveform. Therefore, the switching time of the current application direction is determined by the Hall output, causing change in the characteristics of motor. If the Hall element output amplitude is large, the start-up performance and efficiency of the IC are improved. On the other hand, if the Hall element output amplitude is small, low-noise drive is ensured. Adjust the Hall element output amplitude by R1.

*4: Keep this open when this is not used.

*5: When the wiring from the Hall output to IC Hall input is long, noise may be carried through the wiring.
In this case, insert the capacitor as shown in the figure.

ORDERING INFORMATION

Device	Package	Wire Bond	Shipping† (Qty / Packing)
LA6583MC–AH	MFP10SK (225mil)	Au–wire	1,000 / Tape & Reel
LA6583MC–W–AH	MFP10SK (225mil)	Cu–wire	1,000 / Tape & Reel

†For information on tape and reel specifications, including part orientation and tape sizes, please refer to our Tape and Reel Packaging Specifications Brochure, BRD8011/D.

MECHANICAL CASE OUTLINE
PACKAGE DIMENSIONS

ON Semiconductor®

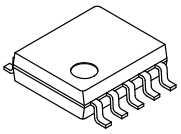

SOIC10W / MFP10SK (225 mil)
CASE 751DA
ISSUE A

DATE 23 OCT 2013

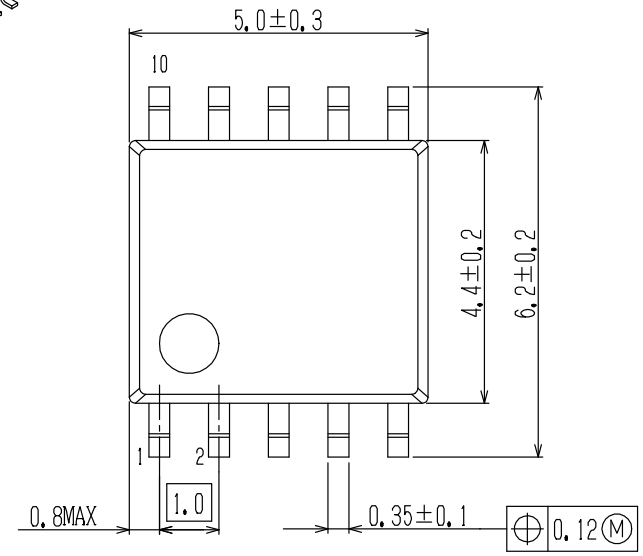

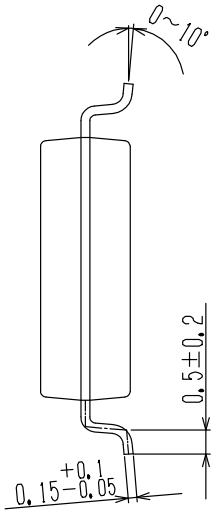

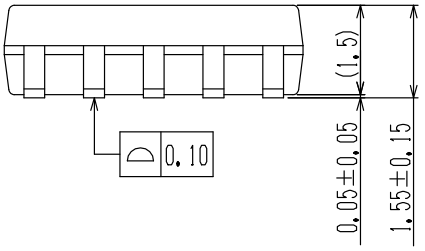

SOLDERING FOOTPRINT*

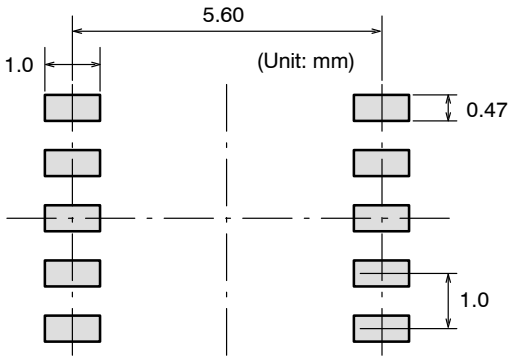

NOTE: The measurements are not to guarantee but for reference only.

*For additional information on our Pb−Free strategy and soldering details, please download the ON Semiconductor Soldering and Mounting Techniques Reference Manual, SOLDERRM/D.

GENERIC MARKING DIAGRAM*

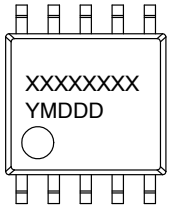

XXXX = Specific Device Code
Y = Year
M = Month
DDD = Additional Traceability Data

*This information is generic. Please refer to device data sheet for actual part marking. Pb−Free indicator, “G” or microdot “ ▪”, may or may not be present.

DOCUMENT NUMBER:	**98AON80819E**	Electronic versions are uncontrolled except when accessed directly from the Document Repository. Printed versions are uncontrolled except when stamped “CONTROLLED COPY” in red.	
STATUS:	**ON SEMICONDUCTOR STANDARD**		
NEW STANDARD:			
DESCRIPTION:	**SOIC10W / MFP10SK (225 MIL)**		**PAGE 1 OF 2**

ISSUE	REVISION	DATE
O	RELEASED FOR PRODUCTION FROM SANYO ENACT # S−566 TO ON SEMICONDUCTOR. REQ. BY D. TRUHITTE.	31 MAY 2012
A	ADD MARKING AND SOLDER FOOTPRINT INFORMATION. REQUESTED BY DARRELL TRUHITTE.	23 OCT 2013

ON Semiconductor and ON are registered trademarks of Semiconductor Components Industries, LLC (SCILLC). SCILLC reserves the right to make changes without further notice to any products herein. SCILLC makes no warranty, representation or guarantee regarding the suitability of its products for any particular purpose, nor does SCILLC assume any liability arising out of the application or use of any product or circuit, and specifically disclaims any and all liability, including without limitation special, consequential or incidental damages. “Typical” parameters which may be provided in SCILLC data sheets and/or specifications can and do vary in different applications and actual performance may vary over time. All operating parameters, including “Typicals” must be validated for each customer application by customer’s technical experts. SCILLC does not convey any license under its patent rights nor the rights of others. SCILLC products are not designed, intended, or authorized for use as components in systems intended for surgical implant into the body, or other applications intended to support or sustain life, or for any other application in which the failure of the SCILLC product could create a situation where personal injury or death may occur. Should Buyer purchase or use SCILLC products for any such unintended or unauthorized application, Buyer shall indemnify and hold SCILLC and its officers, employees, subsidiaries, affiliates, and distributors harmless against all claims, costs, damages, and expenses, and reasonable attorney fees arising out of, directly or indirectly, any claim of personal injury or death associated with such unintended or unauthorized use, even if such claim alleges that SCILLC was negligent regarding the design or manufacture of the part. SCILLC is an Equal Opportunity/Affirmative Action Employer. This literature is subject to all applicable copyright laws and is not for resale in any manner.

ON Semiconductor and ON are trademarks of Semiconductor Components Industries, LLC dba ON Semiconductor or its subsidiaries in the United States and/or other countries. ON Semiconductor owns the rights to a number of patents, trademarks, copyrights, trade secrets, and other intellectual property. A listing of ON Semiconductor's product/patent coverage may be accessed at www.onsemi.com/site/pdf/Patent−Marking.pdf. ON Semiconductor reserves the right to make changes without further notice to any products herein. ON Semiconductor makes no warranty, representation or guarantee regarding the suitability of its products for any particular purpose, nor does ON Semiconductor assume any liability arising out of the application or use of any product or circuit, and specifically disclaims any and all liability, including without limitation special, consequential or incidental damages. Buyer is responsible for its products and applications using ON Semiconductor products, including compliance with all laws, regulations and safety requirements or standards, regardless of any support or applications information provided by ON Semiconductor. "Typical" parameters which may be provided in ON Semiconductor data sheets and/or specifications can and do vary in different applications and actual performance may vary over time. All operating parameters, including "Typicals" must be validated for each customer application by customer's technical experts. ON Semiconductor does not convey any license under its patent rights nor the rights of others. ON Semiconductor products are not designed, intended, or authorized for use as a critical component in life support systems or any FDA Class 3 medical devices or medical devices with a same or similar classification in a foreign jurisdiction or any devices intended for implantation in the human body. Should Buyer purchase or use ON Semiconductor products for any such unintended or unauthorized application, Buyer shall indemnify and hold ON Semiconductor and its officers, employees, subsidiaries, affiliates, and distributors harmless against all claims, costs, damages, and expenses, and reasonable attorney fees arising out of, directly or indirectly, any claim of personal injury or death associated with such unintended or unauthorized use, even if such claim alleges that ON Semiconductor was negligent regarding the design or manufacture of the part. ON Semiconductor is an Equal Opportunity/Affirmative Action Employer. This literature is subject to all applicable copyright laws and is not for resale in any manner.

PUBLICATION ORDERING INFORMATION

LITERATURE FULFILLMENT:
Literature Distribution Center for ON Semiconductor
19521 E. 32nd Pkwy, Aurora, Colorado 80011 USA
Phone: 303−675−2175 or 800−344−3860 Toll Free USA/Canada
Fax: 303−675−2176 or 800−344−3867 Toll Free USA/Canada
Email: orderlit@onsemi.com

N. American Technical Support: 800−282−9855 Toll Free USA/Canada
Europe, Middle East and Africa Technical Support:
Phone: 421 33 790 2910

ON Semiconductor Website: **www.onsemi.com**

Order Literature: http://www.onsemi.com/orderlit

For additional information, please contact your local Sales Representative

◊