Ordering number : EN7894B

LB8649W

Monolithic Digital IC

Digital Camera Motor Driver

ON Semiconductor®

http://onsemi.com

Overview

The LB8649W integrates the actuator drivers required by digital cameras on a single chip.

Features

- Integrates the actuator drivers required by digital cameras on a single chip.
  1. Shutter drive ("SH") /AE system constant current output stepping motor or two VCM drivers
  2. Zoom system constant voltage output stepping motor or DC motor driver (forward/reverse/brake)
  3. AF system constant voltage output stepping motor driver
- Zero standby mode current consumption (allows batteries to be connected directly)
- Four independent power supply systems (SH/AE, AF, zoom, and input logic systems)
- Low-voltage drive (allows operation from two NiMH batteries)
- Built-in thermal protection circuit

Specifications

Absolute Maximum Ratings at Ta = 25°C

Parameter	Symbol	Conditions	Ratings	Unit
Maximum supply voltage	VB max	VB power supply	10.5	V
	V_{CC} max	V_{CC} power supply	10.5	V
Maximum input voltage	V_{IN} max		10.5	V
Maximum output voltage	V_{OUT} max		10.5	V
Maximum output current	I_O max	Per channel	600	mA
Allowable power dissipation	Pd max	When mounted on a circuit board *1	1.0	W
Operating temperature	Topr		-20 to +80	°C
Storage temperature	Tstg		-55 to +150	°C

*1 Specified circuit board : 76.1 × 114.3 × 1.6mm³, glass epoxy.

Stresses exceeding Maximum Ratings may damage the device. Maximum Ratings are stress ratings only. Functional operation above the Recommended Operating Conditions is not implied. Extended exposure to stresses above the Recommended Operating Conditions may affect device reliability.

Allowable Operating Ranges at Ta = 25°C

Parameter	Symbol	Conditions	Ratings	Unit
Supply voltage range	VB1, 2, 3	*2	1.9 to 10	V
	V_{CC}		1.9 to 10	
High-level input pin voltage	$V_{IN}H$		1.8 to 10	V
Low-level input pin voltage	$V_{IN}L$		–0.3 to 0.4	V
Constant voltage setting input range	VOC	VC1, VC2	0.1 to VB	V
Constant current setting input range	$V_{O}I$	IAE, ISH	0.1 to 1.0	V

*2 There are no restraints on the relative magnitudes of the VB1, VB2, V_{DD}, V_{CC}, and V_{IN} power supply system voltages.
Example 1 : VB1 = VB2 = V_{DD} = 2.4V (battery power supply), V_{CC} = 4V (stepped up power supply), V_{IN} (CPU power supply) = 5V
Example 2 : VB1 = VB2 = 2.4V, V_{IN} = 3.3 V, V_{DD} = V_{CC} = 5V

Electrical Characteristics at Ta = 25°C, VB = V_{CC} = 2.4V, Rf = 1Ω

Parameter	Symbol	Conditions	Ratings			Unit
			min	typ	max	
Standby mode current consumption	$I_{CC}0$	VB1 = VB2 = V_{CC} = V_{DD} = 8.0V *3		0.1	5.0	μA
Operating mode current consumption	$I_{CC}1$	IN1, IN2, IN3 or IN4 = High *3		6	9	mA
	$I_{CC}2$	IN5, IN6, IN7 or IN8 = High *3		14	19	
	$I_{CC}3$	IN9, IN10, IN11 or IN12 = High *3		18	25	
Reference voltage	Vref1	Iref = -1mA, INHD = Low	0.95	1.0	1.05	V
	Vref2	Iref = -1mA, INHD = High	0.64	0.67	0.70	
Control pin input current	I_{IN}	V_{IN} = 5.0V		60	90	μA
Thermal shutdown operating temperature	TSD	Design guarantee *4	160	180	200	°C
AF System Constant Voltage Stepping Motor Driver (OUT1, 2, 3, 4)						
Output constant voltage 1	$V_{O}1$	VC1 = 0.30V	1.46	1.53	1.60	V
Output saturation voltage 1	VSAT1	I_O = 0.2A (High and low side total)	0.27	0.37	0.50	V
Zoom System Constant Voltage Driver (OUT5, 6, 7, 8)						
Output constant voltage 2	$V_{O}2$	VC2 = 0.30V	1.46	1.53	1.60	V
Output saturation voltage 2	VSAT2	I_O = 0.2A (High and low side total)	0.27	0.37	0.50	V
SH/AE System Constant Current Driver (OUT9, 10, 11, 12)						
Output constant current	I_O	Rf = 1Ω, ISH = 0.3V	271	285	302	mA
Output saturation voltage 3	VSAT3	I_O = 0.3A (High and low side total)	0.33	0.44	0.60	V

*3 : This is stipulated to be the sum of the current consumption for the VB1, VB2, V_{DD}, and V_{CC} lines.

*4 : The device characteristics are not tested at all temperatures. They are only tested at Ta = 25°C at shipment; the characteristics in the guaranteed temperature range are design guarantees.

Package Dimensions

unit : mm (typ)

3163B

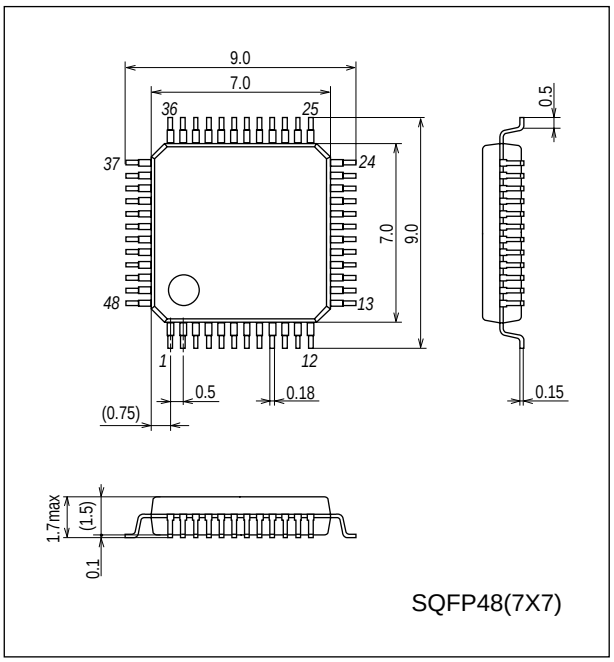

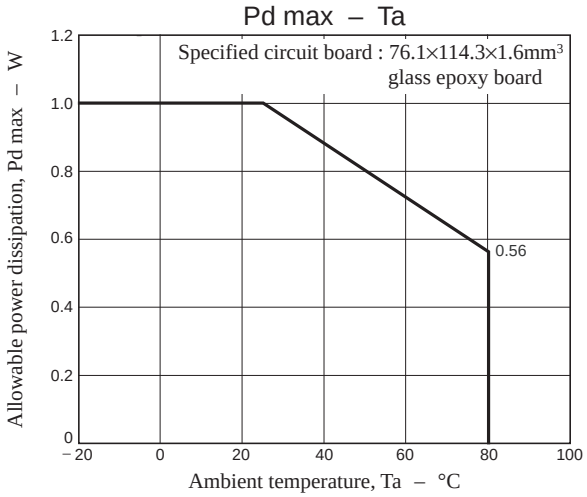

Pin Assignment

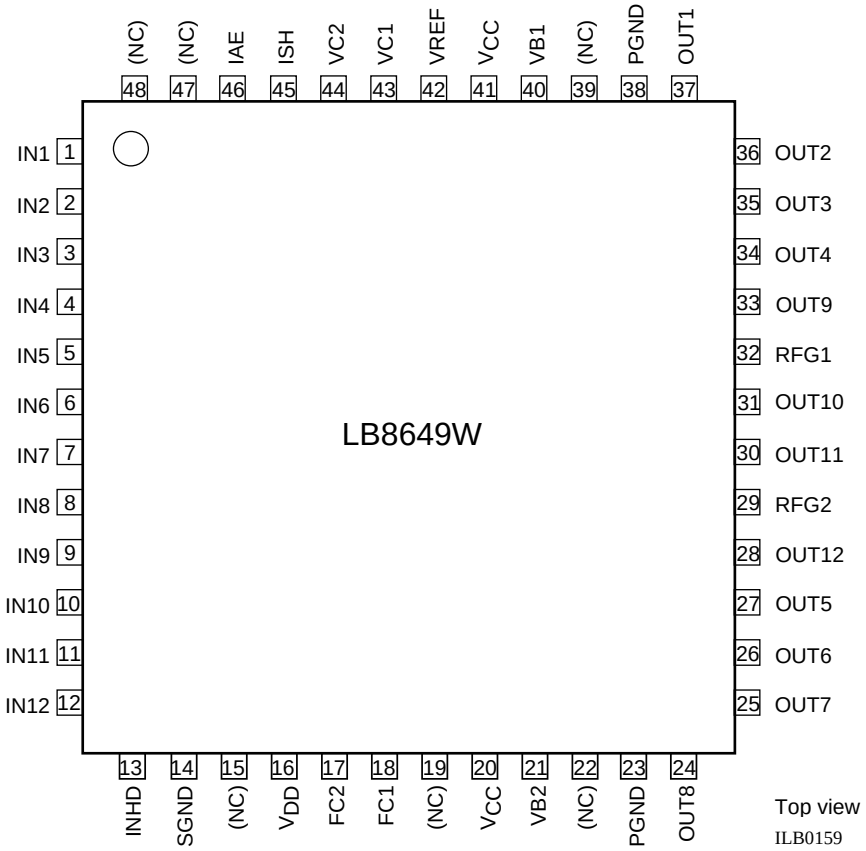

Note : Both PGNDs must be connected.

V_{DD} : Power supply for the input system, reference voltage, and logic blocks.

V_{CC} : Power supply for the constant current control block and output blocks (OUT9, 10, 11, and 12)

VB1 : Power supply for the constant voltage control block and output blocks (OUT1, 2, 3, and 4)

VB2 : Power supply for the constant voltage control block and output blocks (OUT5, 6, 7, and 8)

Truth Table

(1) AF system stepping motor constant voltage control

Input					Output					Mode
IN1	IN2	IN3	IN4	INHD	OUT1	OUT2	OUT3	OUT4	Vref	
Low	Low	Low	Low	Low	–	–	–	–	–	Standby
High	Low	Low	Low	Low	High	Low	–	–	1.0V	1-2 phase excitation
High	Low	High	Low		High	Low	High	Low		
Low	Low	High	Low		–	–	High	Low		
Low	High	High	Low		Low	High	High	Low		
Low	High	Low	Low		Low	High	–	–		
Low	High	Low	High		Low	High	Low	High		
Low	Low	Low	High		-	-	Low	High		
High	Low	Low	High		High	Low	Low	High		
High	High	*	*		–	–				Output off
*	*	High	High				–	–		
*	*	*	*	Low					1.0V	
				High					0.67V	

Notes

1. "–" indicates the output off state.
2. When the output is high, a level that is VC1 × 5.1 will be output.

(2) Zoom stepping motor constant voltage control, or DC motor drive

Input					Output					Mode
IN5	IN6	IN7	IN8	INHD	OUT5	OUT6	OUT7	OUT8	Vref	
Low	Low	Low	Low	Low	–	–	–	–	–	Standby
High	Low	Low	Low	Low	High	Low	–	–	1.0V	1-2 phase excitation
High	Low	High	Low		High	Low	High	Low		
Low	Low	High	Low		–	–	High	Low		
Low	High	High	Low		Low	High	High	Low		
Low	High	Low	Low		Low	High	–	–		
Low	High	Low	High		Low	High	Low	High		
Low	Low	Low	High		-	-	Low	High		
High	Low	Low	High		High	Low	Low	High		
High	High	*	*		High	High				Brake
*	*	High	High				High	High		
*	*	*	*	Low					1.0V	
				High					0.67V	

Notes

1. "–" indicates the output off state, "*" indicates "Don't care".
2. When the output is high, a level that is VC2 × 5.1 will be output.

(3) SH/AE system VCM driver constant current control or stepping motor drive

Input					Output						Mode
IN9	IN10	IN11	IN12	INHD	OUT9	OUT10	OUT11	OUT12	Vref	ISH	
Low	Low	Low	Low	Low	–	–	–	–	1.0V	Setting voltage state	Standby
High	Low	*	*		High	Low					SH & AE
Low	High	*	*		Low	High					
*	*	High	Low				High	Low			
*	*	Low	High				Low	High			
High	Low	*	*	High	High	Low			0.67V		Hold
Low	High	*	*		Low	High					
*	*	High	Low				High	Low			
*	*	Low	High				Low	High			
Low	Low	Low	Low		–	–	–	–		Discharged	Standby

Notes

1. "–" indicates the output off state, "*" indicates "Don't care".
2. OUT9 and OUT10 are for SH, and provide stable startup characteristics with fast charge and fast discharge circuits.
3. OUT10 and OUT11 are for AE.
4. In standby mode, the ISH pin voltage is discharged by an internal transistor and thus is set to 0V.
5. Furthermore, the ISH pin is also set to the discharged state when inputs are provided to IN1 through IN8. This is for startup correction.
6. When INHD is low, the Vref voltage will be 1.0V, and when high, the Vref voltage will be 0.67V.

Notes on Application Design

(1) Constant current level setting (ISH, IAE, RFG1/2, and OUT9 to OUT12)

The constant current level for the OUT9/10 pair is set by the ISH input voltage and the resistor connected to RFG1. As shown in the block diagram, the current is controlled so that the voltage generated across the current detection resistor connected between RFG1 and ground and the ISH input voltage become equal. The output current can be determined from the following equation.

(Output current between OUT9 and OUT10) = (ISH input voltage) ÷ (RFG1 resistance + 0.05Ω)

The 0.05Ω here is the shared impedance of the emitter of the output transistor that drives the constant current and the constant current control amplifier's sensing line.
Similarly, the constant current level for the OUT11/12 pair is set by the IAE input voltage and the resistor connected to RFG2.
Note that since the constant current control block is connected to PGND internally to the IC, if voltage is provided to ISH and IAE through a voltage divider, the voltage divider resistor ground must be connected to PGND.

(2) Rapid charge and discharge circuits (FC1, OUT9, and OUT10)

The SH control block (OUT9/10) includes rapid charge and rapid discharge circuits to support burst (rapid sequential) imaging.
Since this type of circuit is not included in the AE control block (OUT11/12), the OUT9/10 block must be used for shutter drive.

(3) Startup correction function (ISH, OUT9, and OUT10)

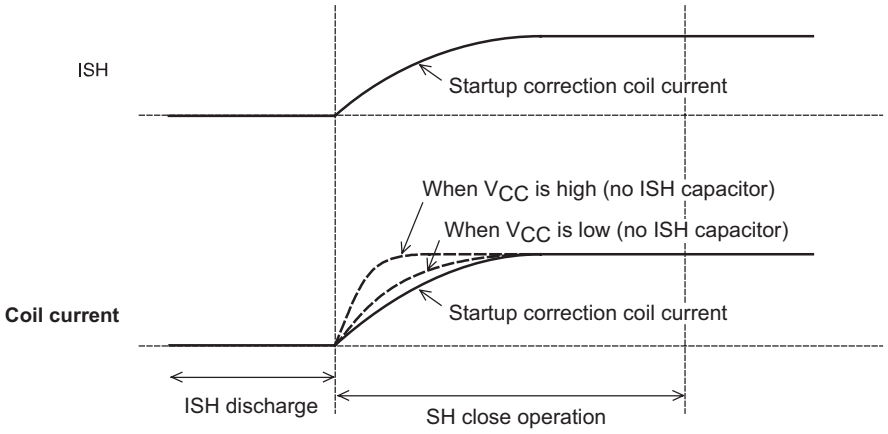

Startup correction is applied to the coil waveform by setting the ISH pin input voltage to a time constant larger than that of the coil with an external RC circuit. This makes it possible to provide stable shutter operation even in the presence of power supply fluctuations.

Note : For the ISH startup correction, the capacitance is determined by, in the state where the ISH capacitor is not present, verifying the coil current startup waveform when V_{CC} is at a reduced level and choosing a capacitance such that the time constant is lower than that of this waveform.
Note, however, that in cases where, for example, the supply voltage is stabilized and a startup correction function is not needed, this startup correction capacitor is not needed.

(4) Phase correction capacitor (FC1, FC2)

Consider values in the range 0.0015 to 0.033µF for the FC1/2 capacitors, and select values such that oscillation in the output is not a problem. If a coil with a particularly high impedance is used, an adequate margin must be provided in the capacitor value. Note that since the constant current control block is connected to PGND internally to the IC, the ground sides of the FC1/2 capacitors must be connected to PGND.

Notes to determine the value of FC1 and FC2 capacitors
FC1 is the connection for the phase compensation capacitor for the OUT9/10 output constant current control circuit. Similarly, FC2 is the connection for the OUT11/12 phase compensation capacitor.
To determine the value of these capacitors, observe the output waveform and select a value such that the output does not oscillate.

The FC pin is connected in the IC circuit to the constant current control amplifier output blocs and the output transistor is driven by the rise in the FC potential. Therefore, since the FC pin initial state influences the output drive timing, before applying power to the shutter, this IC discharges (with the rapid discharge circuit) the FC pin to a certain fixed potential internally and then when starting to apply power to the shutter, the IC charges (with the rapid charge circuit) the FC pin to a fixed potential internally so that the FC pin state is always fixed when driving the shutter.
This stabilizes the input to output delay time.

However, if the capacitor value is made too large, the time required for the above circuit to charge and discharge that capacitor will become longer and the input to output delay time fluctuations will become larger due to variations in the capacitor value (due both to sample-to-sample variations and to temperature characteristics).
Another disadvantage of making this capacitor larger is that the coil current rising slope will become less steep. Although the rising slope of the coil current is essentially determined by the inductance component of the coil, if the capacitor is made larger and its time constant increases, the slope of the rise of the coil current will become dependent on the capacitor value.

For the above reasons, especially if high-speed shutter drive is required, the value of the capacitor connected to the FC pin should as small as possible as long as the output does not oscillate (the range roughly from 0.0015 to 0.033 µF).

(5) Constant voltage control: oscillation stopping capacitors (OUT1 to OUT8)

If constant voltage control is used, capacitors must be connected across the outputs to stop oscillation. Consider values in the range 0.01 to 0.1µF and select capacitor values such that oscillation in the output is not a problem. Note that if the output is driven at saturation, these oscillator prevention capacitors are not required.

(6) Ground and power supply line capacitors (PGND, SGND, V_{CC}, VB1, VB2, V_{DD})

Capacitors must be inserted between PGND (two locations) and SGND and each of the power supply pins. These capacitors must be positioned as close as possible to the IC.

(7) Input pin equivalent circuits

IN1 to IN12, INHD pins

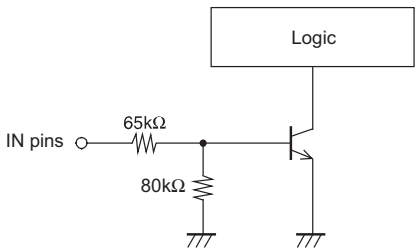

VC1, VC2 pins

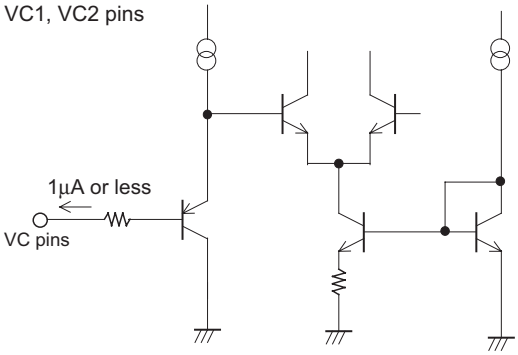

IAE pin

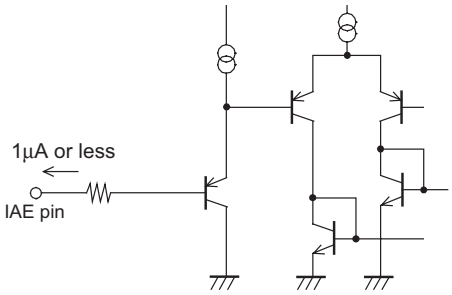

ISH pin

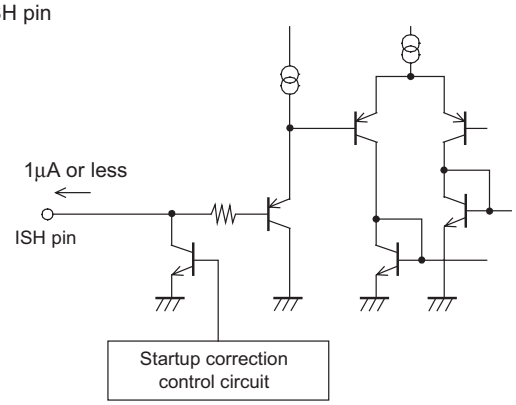

Block Diagram

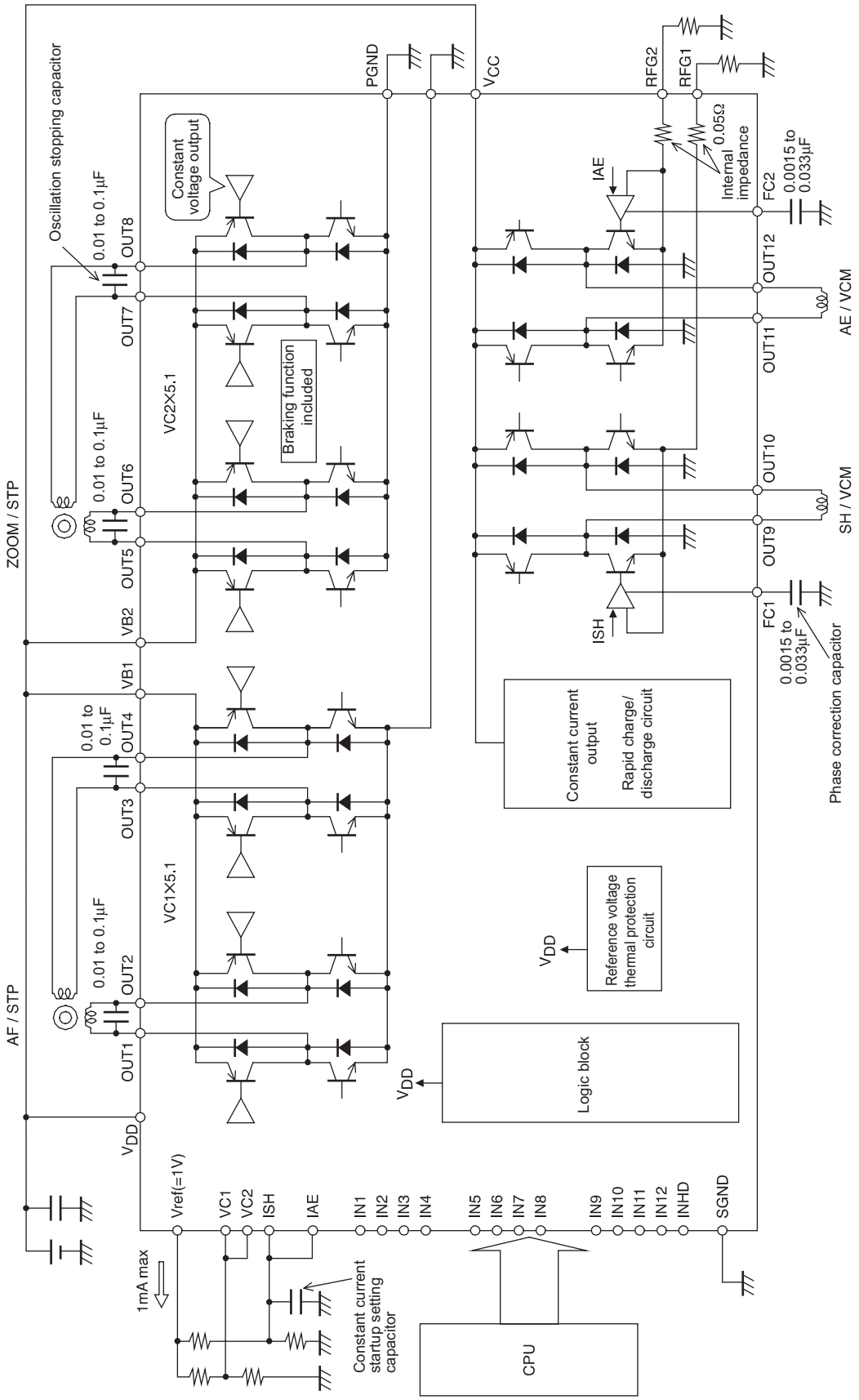

ON Semiconductor and the ON logo are registered trademarks of Semiconductor Components Industries, LLC (SCILLC). SCILLC owns the rights to a number of patents, trademarks, copyrights, trade secrets, and other intellectual property. A listing of SCILLC's product/patent coverage may be accessed at www.onsemi.com/site/pdf/Patent-Marking.pdf. SCILLC reserves the right to make changes without further notice to any products herein. SCILLC makes no warranty, representation or guarantee regarding the suitability of its products for any particular purpose, nor does SCILLC assume any liability arising out of the application or use of any product or circuit, and specifically disclaims any and all liability, including without limitation special, consequential or incidental damages. "Typical" parameters which may be provided in SCILLC data sheets and/or specifications can and do vary in different applications and actual performance may vary over time. All operating parameters, including "Typicals" must be validated for each customer application by customer's technical experts. SCILLC does not convey any license under its patent rights nor the rights of others. SCILLC products are not designed, intended, or authorized for use as components in systems intended for surgical implant into the body, or other applications intended to support or sustain life, or for any other application in which the failure of the SCILLC product could create a situation where personal injury or death may occur. Should Buyer purchase or use SCILLC products for any such unintended or unauthorized application, Buyer shall indemnify and hold SCILLC and its officers, employees, subsidiaries, affiliates, and distributors harmless against all claims, costs, damages, and expenses, and reasonable attorney fees arising out of, directly or indirectly, any claim of personal injury or death associated with such unintended or unauthorized use, even if such claim alleges that SCILLC was negligent regarding the design or manufacture of the part. SCILLC is an Equal Opportunity/Affirmative Action Employer. This literature is subject to all applicable copyright laws and is not for resale in any manner.