BRD8026/D
Rev. 12, Jun-2018

ON Semiconductor®

Energy Efficient Innovations

Portable & Wearable Solutions



Comprehensive imaging, display, RF, audio, power management, protection, USB, interface and memory solutions for portable and wearable devices from ON Semiconductor.











Copyright © 2018, SCILLC

Camera Module

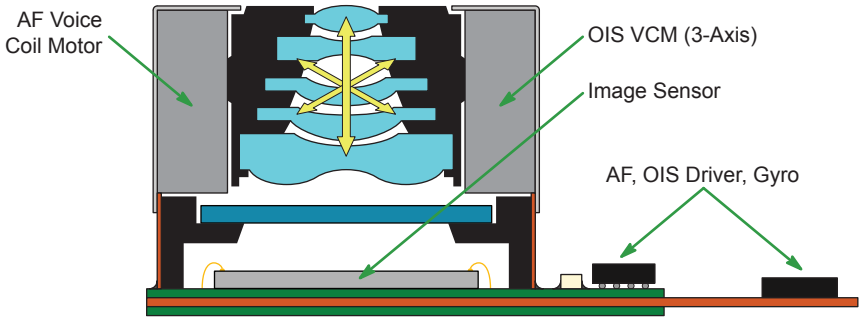

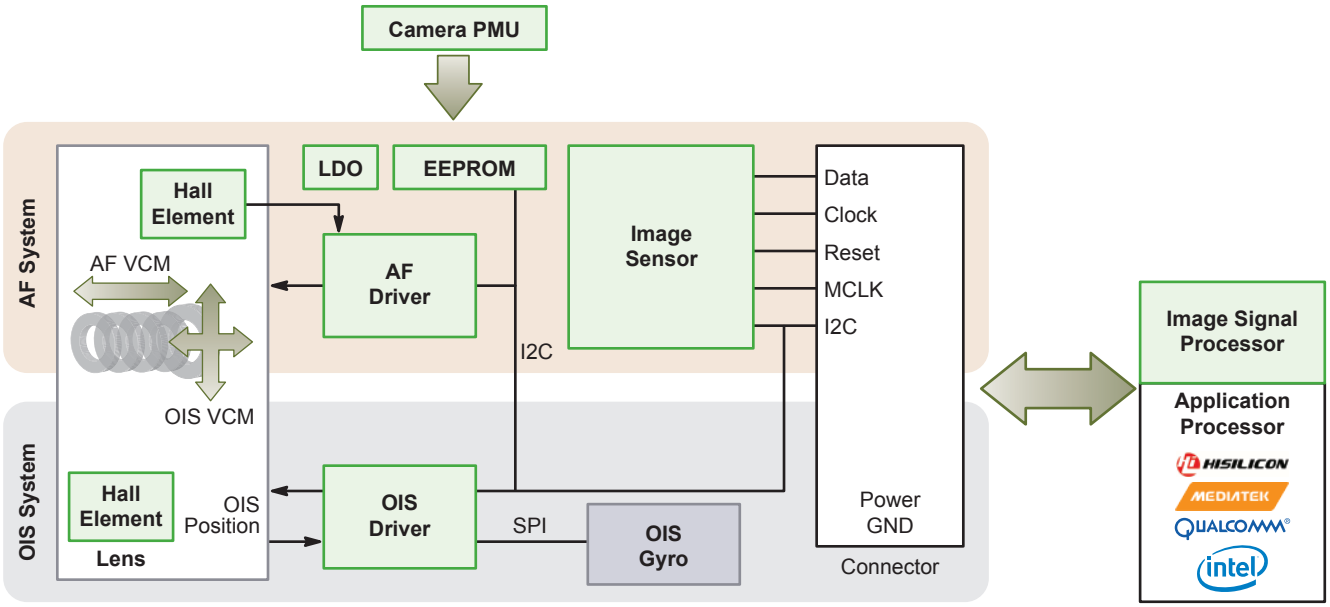



CMOS Imaging Sensors

The CMOS imaging sensor portfolio from ON Semiconductor provides options for all portable and wearable applications. Whether you're building a new AR/VR headset, a 360 degree camera, a new set of imaging glasses, or simply a new wearable device that wants to see the world around it, ON Semiconductor has an Image sensor that can help you deliver an amazing end user experience.

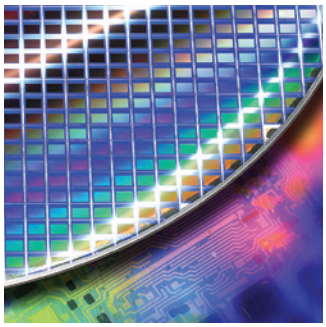

Key Features

- Superior image quality with advanced pixel technology
- Fast frame rates for action shots
- Low power for battery operation
- Great low light performance
- Resolution choice including VGA to 4K (UHD)

Device	Senor/SOC	Resolution (MP)	Optical Format	Frame Rate	Pixel Size (µm)	Shutter Type1	CFA	Temperature
MT9V115	SOC	VGA	1/13"	30 fps	1.8	ERS	Color	-30 to +70°C
ASX340CS	SOC	VGA	1/4"	60 fps	5.6	ERS	Color	-30 to +70°C
ASX370CS	SOC	VGA	1/7"	30 fps	3	ERS	Color	-30 to +70°C
MT9V024	Sensor	WVGA	1/3"	60 fps	6	GS	Color, Mono	-40 to +105°C
MT9V034	Sensor	WVGA	1/3"	60 fps	6	GS	Color, Mono	-30 to +70°C
AR0141CS	Sensor	1.2	1/4"	1.2 45 fps, 720P 60 fps	3	ERS	Color	-30 to +85°C
AR0144CS	Sensor	1	1/4"	60 fps	3	GS	Color, Mono	-40 to +85°C
AR0130CS	Sensor	1.2	1/3"	1.2 45 fps, 720P 60 fps	3.8	ERS	Color, Mono	-30 to +70°C
AR0134CS	Sensor	1.2	1/3"	1.2 54 fps, 720 60 fps	3.8	GS	Color, Mono	-30 to +70°C
AR0135CS	Sensor	1.2	1/3"	1.2 60 fps, 720 60 fps	3.8	GS	Color, Mono	-30 to +70°C
MT9M114	SOC	1.3	1/6"	1.3 30 fps, VGA 75 fps	1.9	ERS	Color	-30 to +70°C
AR023Z	Sensor	2.1	1/2.7"	1080P 60 fps	3	ERS, GRR	Color	-30 to +85°C
AR0237CS	Sensor	2.1	1/2.7"	1080P 60 fps	3	ERS	Color	-30 to +85°C
AR0237IR	Sensor	2.1	1/2.7"	1080P 60 fps	3	ERS	RGB-IR	-30 to +85°C
AR0238	Sensor	2.1	1/2.7"	1080P 60 fps	3	ERS	Color	-30 to +85°C
AR0239	Sensor	2.1	1/2.7"	1080P 90 fps	3	ERS	Color	-30 to +85°C
AR0261	Sensor	2.1	1/6"	1080p 60 fps	1.4	ERS	Color	-30 to +70°C
AS0260	SOC	2.1	1/6"	30 fps	1.4	ERS	Color	-30 to +70°C
AR0330	Sensor	3.5	1/3"	1080P 60 fps	2.2	ERS, GRR	Color	-30 to +70°C
AR0430	Sensor	4	1/3"	120 fps	2	ERS	Color	-30 to +70°C
AR0431	Sensor	4	1/3"	120 fps	2	ERS	Color	-30 to +85°C
AR0521	Sensor	5	1/2.5"	60 fps	2.2	ERS	Color, Mono	-30 to +85°C
AR0522	Sensor	5	1/2.5"	60 fps	2.2	ERS	Color, Mono	-30 to +85°C
AR1335	Sensor	13	1/3.2"	13 30 fps, 1080P 60 fps	1.1	ERS, GRR	Color	-30 to +70°C
AR1337	Sensor	13	1/3.2"	13 30 fps, 1080P 60 fps	1.1	ERS, GRR	Color	-30 to +70°C

Optical Image Stabilization Drivers

LC898123F40 DSP-based Optical Image Stabilization (OIS) and Auto Focus (AF) controller/driver includes integrated Flash memory, analog circuits, H-bridge and constant current drivers. The integrated Flash enables fast wakeup and simplifies Host-side software implementation.

Key Features

- Integrated DSP software filter
- Integrated Flash memory (40 KB)
- Integrated OSC, LDO, and Hall amplifier
- Digital Gyro I/F
- 4-channel, 14-bit ADC; 3-channel, 8-bit DAC

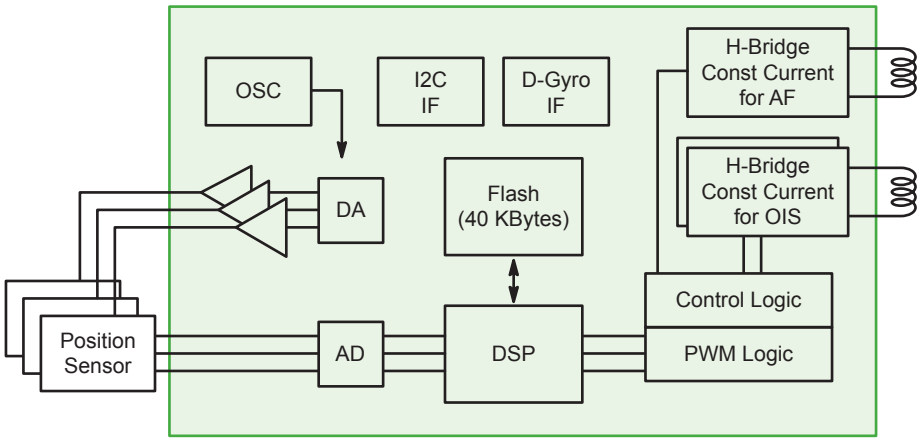

LC898123F40 Block Diagram

Device	Type	V_{DD} Min (V)	V_{DD} Max (V)	V_M Min (V)	V_M Max (V)	Driver (mA)	CPU IF	D/A	A/D	Package(s)
LC898122/122A	Feedback	2.6	3.6	2.6	3.6	220/150	I2C	8-Bit	12-Bit	WLCSP-30
LC898123AXD	Feedback	2.6	3.6	2.6	3.6	195/120	I2C	8-Bit	12-Bit	WLCSP-35
LC898123F40	Feedback	2.6	3.3	2.6	3.3	200/150	I2C	8-Bit	14-Bit	WLCSP-35

Closed Auto-Focus Drivers

LC898217XC/XH closed loop auto focus driver includes integrated driver, loop digital filter, and EEPROM. System implementation requires only a Hall sensor and by-pass condenser. LC898217XC/XH enables fast and accurate auto focusing, with low power consumption, from an extremely small footprint.

Key Features

- Integrated equalizer circuit
- Integrated EEPROM memory (128 byte)
- Integrated OSC, LDO, and Hall amplifier
- Integrated Constant Current Driver and Linear Compensation
- 1-channel, 11-bit ADC; 2-channel, 8-bit DAC

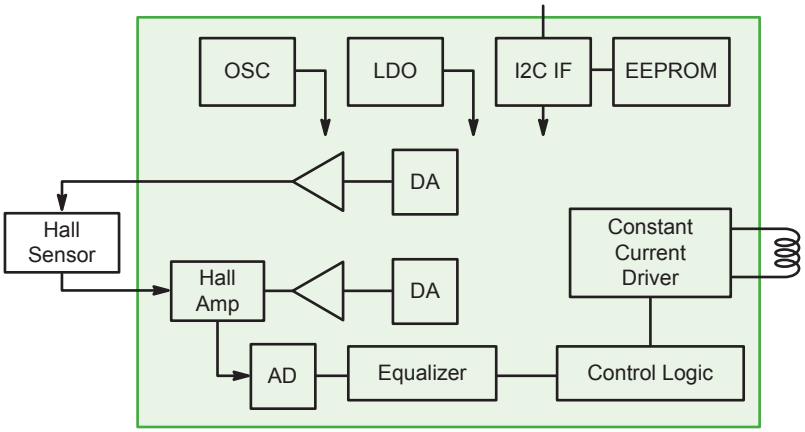

LC898217XC/XH Block Diagram

Device	Type	V_{DD} Min (V)	V_{DD} Max (V)	V_M Min (V)	V_M Max (V)	Driver (mA)	CPU IF	D/A	A/D	Package(s)
LC898212XD	Feedback	2.6	3.6	2.6	3.6	130	I2C	8-Bit	10-Bit	WLCSP-12
LC898214XD	Feedback	2.6	3.6	–	–	120	I2C	8-Bit	10-Bit	WLCSP-8
LC898217XC/XH	Feedback	2.6	3.3	–	–	110	I2C	8-Bit	11-Bit	WLCSP-10

MIPI Switching Devices

Key Features

- Optimized bandwidth for high data rate transition
- Low quiescent current consumption
- WLCSP or UMLP package

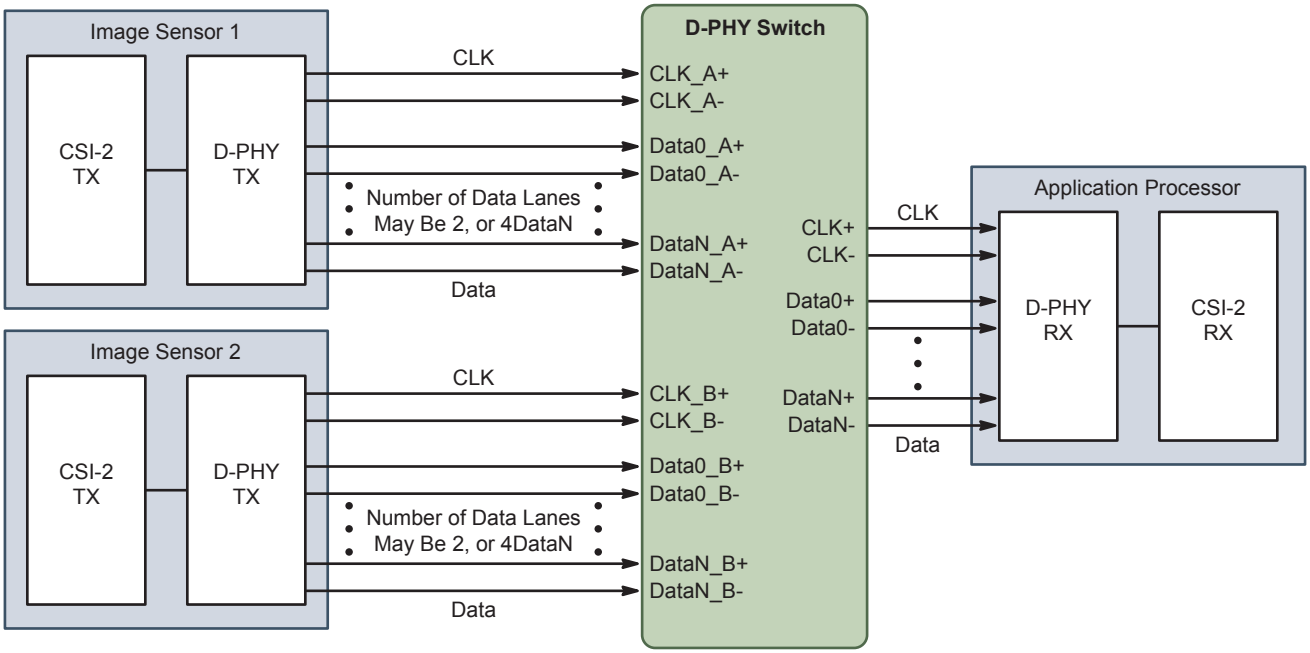

Device	Standard	Type	V_{CC} Max (V)	Quiescent Current Max	Packages
FSA646	D-PHY	4-Lane	5	30 µA	WLCSP-36
FSA644	D-PHY	4-Lane	4.5	32 µA	WLCSP-36
NL3HS644	D-PHY	4-Lane	4.5	55 µA	WLCSP-36
FSA642	D-PHY	2-Lane	4.3	1µA	UMLP-24
FSA660	C-PHY	1-Lane	5	30 µA	UMLP-18

Camera Module PMICs

Key Features

- Mid-size integration
  - Complements main PMU under minimum supervision
  - CSP package saves space on a flex or dedicated PCB
- High performance
  - High efficiency and low quiescent current for battery life
  - Low noise (<50 μV_{RMS}) for high resolution performance
  - Fully programmable through I2C to adapt default output voltages and power up and down sequencing
- Modular approach
  - 5 or 6 regulators for 2D / 3D modules and back / front cameras



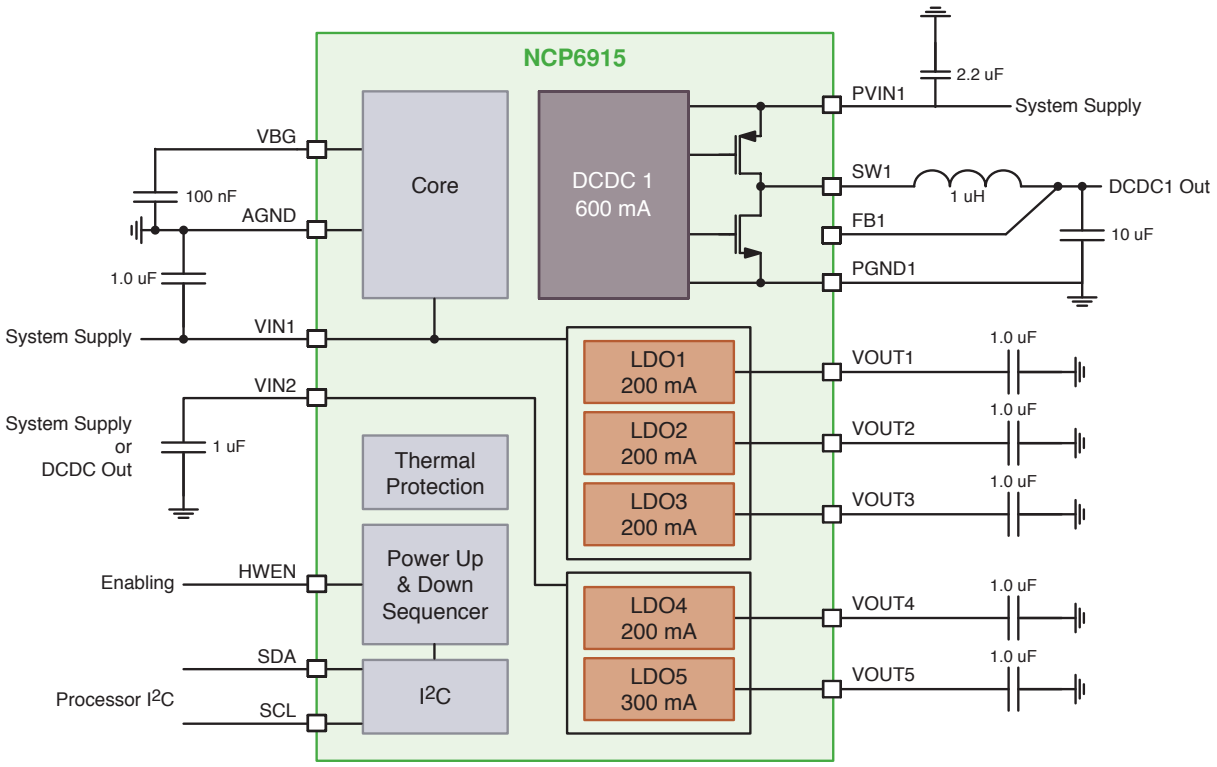

Device	DC-DC (mA)	LDO (mA)	Package(s)
NCP6925	2 x 1000	5 x 300	CSP-36
NCP6924	2 x 1000	2 x 300, 2 x 150	CSP-30
NCP6914	1 x 800	4 x 300	CSP-20
NCP6915	1 x 600	1 x 300, 4 x 150	CSP-16

BelaSigna® Audio Processors

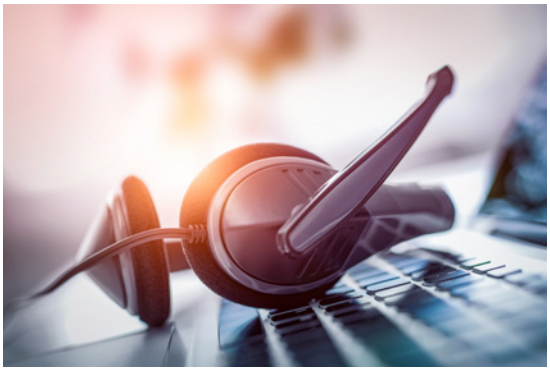

The BelaSigna line of audio processors is optimized for portable applications, delivering superior audio clarity without compromising size or battery life. BelaSigna offers ultra-low power consumption, design flexibility, and a miniature package by providing a highly integrated hardware solution with a dual-core architecture.

BelaSigna Open-Programmable Audio Processors

Device	Description	MIPS Max	Dynamic Range (dB)	RAM (kB)	Interfaces	Power Consumption	Standby Current (μA)	Analog Audio	Package(s)
BelaSigna 300	24-bit Audio Processor for Portable Communication Devices	240	110/88	110	I2C, SPI, I2S, PCM, GPIO,	1-5 mA typical	40	4/1	DFN-44
BelaSigna 250	16-bit Audio Processor, Full Stereo 2-in, 2-out	60	88	42	I2C, SPI, I2S, PCM, GPIO, UART	5 mA at 20 MHz	50	2/2	LFBGA-64

BelaSigna R-Series Audio Processors



BelaSigna R281
Always-Listening, Voice Trigger Solution

- Will detect a single, user-trained trigger phrase, asserting awake-up signal when this phrase is detected
- ~300 μW power consumption for true “always-on” operation without affecting battery Standby life

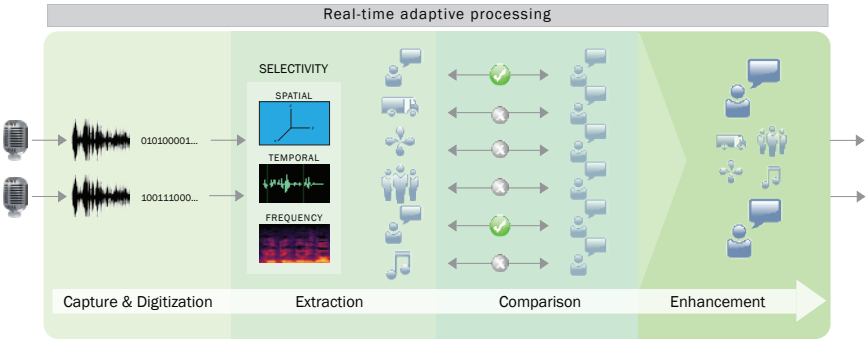

BelaSigna R262
Wideband Voice Capture and Noise Reduction SoC

- Provides wideband single- or dual-microphone noise reduction
- Preserves voice naturalness for improved speech intelligibility regardless of environment

BelaSigna® Open-Programmable Development Tools

Developing a portable audio device from initial concept and design through to production can be a complex and lengthy process. Success often depends on shortening product development cycles, enabling faster time-to-market.

ON Semiconductor addresses this need by providing designers with a complete solution, no matter which development path they chose. In addition to a variety of software algorithm bundles, BelaSigna audio processors are also complemented by an advanced suite of development tools. The fully integrated set of development tools enable manufacturers to quickly and easily develop, debug and test algorithm software for ON Semiconductor's audio DSP systems.

Evaluation and Development Kit Contents

Software
EDK Software and Documentation* Integrated Development Environment (IDE) Advanced Editor Debugger Project Manager Automated Build System Project Wizard EEPROM Manager Assembler Sample Applications System Libraries Documentation Set
WOLA Toolbox
SignaKlara™ Blockset
CTK Developer Kit (CTK DK)

* The EDK includes one year of software updates.

Hardware
Evaluation and Development Board (EDB)

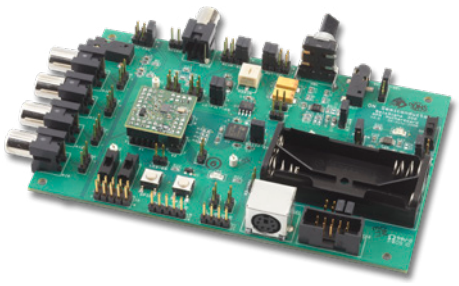

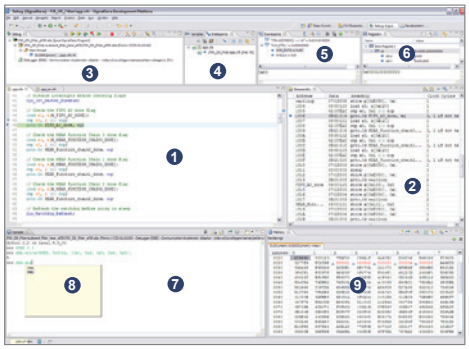

Debug perspective showing (1) source code, (2) disassembly, (3) debug, (4) breakpoint, (5) expression, (6) register, (7) command console, (8) content assist, and (9) memory views.

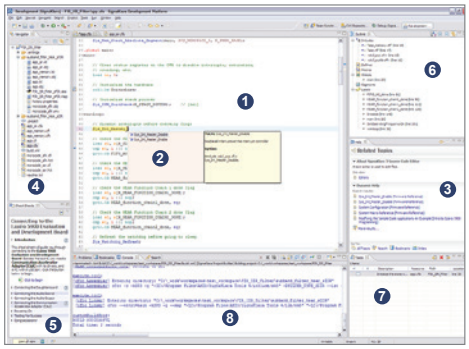

Development perspective showing (1) advanced editor with (2) content assist, (3) dynamic help, (4) workspace navigator, (5) cheat sheets for common tasks, (6) outline view, (7) tasks, and (8) console views. Console shows build output and is a tabbed overlay with search, bookmark and error views.

Integrated Development Environment (IDE)

ON Semiconductor's Integrated Development Environment is a fully integrated software development environment that enables developers to code, compile, debug and validate algorithms. Features include:

- **Team based programming** that greatly simplifies project management by allowing multiple developers to simultaneously work on the same design.
- **Project wizard** with templates based on sample algorithms, automatic no-maintenance project builder and system libraries to reduce development time.
- **Integrated debugger** providing full source code debugging and scriptable interface, customized expression watch, register, and memory views with changed value highlighting.
- **Sample application source code** provides complete sample algorithms plus samples of most basic application components.
- **Advanced editor** with content assist (command completion), syntax highlighting and integrated help enables context-sensitive, dynamic reference lookup.
- **Full user and reference documentation set** integrated with the IDE; dynamically searchable while editing.
- **Interactive scripting console** allowing developers to script activities within the IDE using a Python-like language, and to execute/test automated scripts that can interface with the chip and the development environment.

BelaSigna® Open-Programmable Development Tools



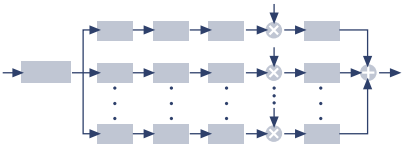

Solution Evaluation

To evaluate audio processors and signal processing software, ON Semiconductor offers a solution that is easy to demonstrate, evaluate and design in. Developers can use software tools to develop their own signal processing algorithms to run on the BelaSigna hardware.



Algorithm Development

To support the algorithm development process, ON Semiconductor offers an Evaluation and Development Kit (EDK) featuring an Integrated software Development Environment (IDE) for composing, compiling and debugging algorithm code. A Communication Accelerator Adaptor (CAA) connects the IDE running on a PC to a Rapid Prototyping Module (RPM) or Evaluation and Development Board (EDB)*. Using these components, developers can implement and immediately validate the performance of their proprietary algorithms, third-party algorithms, or other software integrated with BelaSigna bundles directly on BelaSigna hardware.

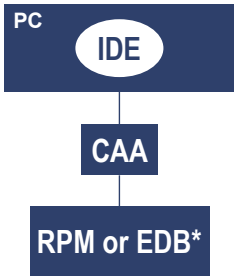



Hardware Testing & Prototyping

ON Semiconductor enables form-factor hardware testing and prototyping with an RPM, optionally attached to a motherboard, that connects directly to a CAA. The RPM's plug-in design enables developers to quickly transition from development in a simulation environment to testing a complete portable audio system. To facilitate development and testing even further, the RPM can be moved directly from the motherboard to a prototype for final hardware assessment.

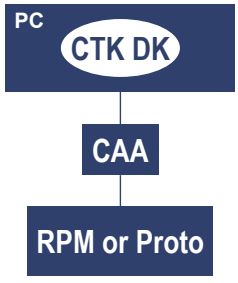



Production & Final Testing

To prepare portable audio products for the market, the CTK Run-time and CAA enable manufacturers to store firmware and data on an attached EEPROM, tune parameters on a unit-by-unit basis, configure the chip, and run final tests. By attaching a CAA directly to a Printed Circuit Board Assembly (PCBA), the CTK DK can be used to develop a customized software-controlled production flow to meet the specific needs of your production environment.

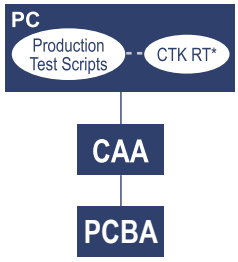

Portable Sound Solution ASSP

LC823450 series high resolution, ultra-low power portable audio system solution

Key Features

- Ultra low power consumption
- Integrated 1656 KByte SRAM
- Arm® Cortex®-M3 Dual Core
- Proprietary 32-bit DSP Core (LPDSP32)
- DSP audio code available for MP3 codec, FLAC codec, Noise Cancel, Zoom Mic
- High resolution 32-bit & 192 KHz audio processing capability
- Integrated analog blocks for low-power Class D HP amplifier, system PLL, dedicated audio PLL
- Hard wired audio functions for MP3 encoder and decoder, EQ (6-band equalizer), ASRC (Asynchronous Sample Rate Converter)
- Integrated interfaces for USB2.0 HS device or host (not OTG), eMMC, SD card I/F
- ASRC with jitter hiding function, DSP code for SBC/AAC, UART with DMA & FIFO support for low power Bluetooth® audio

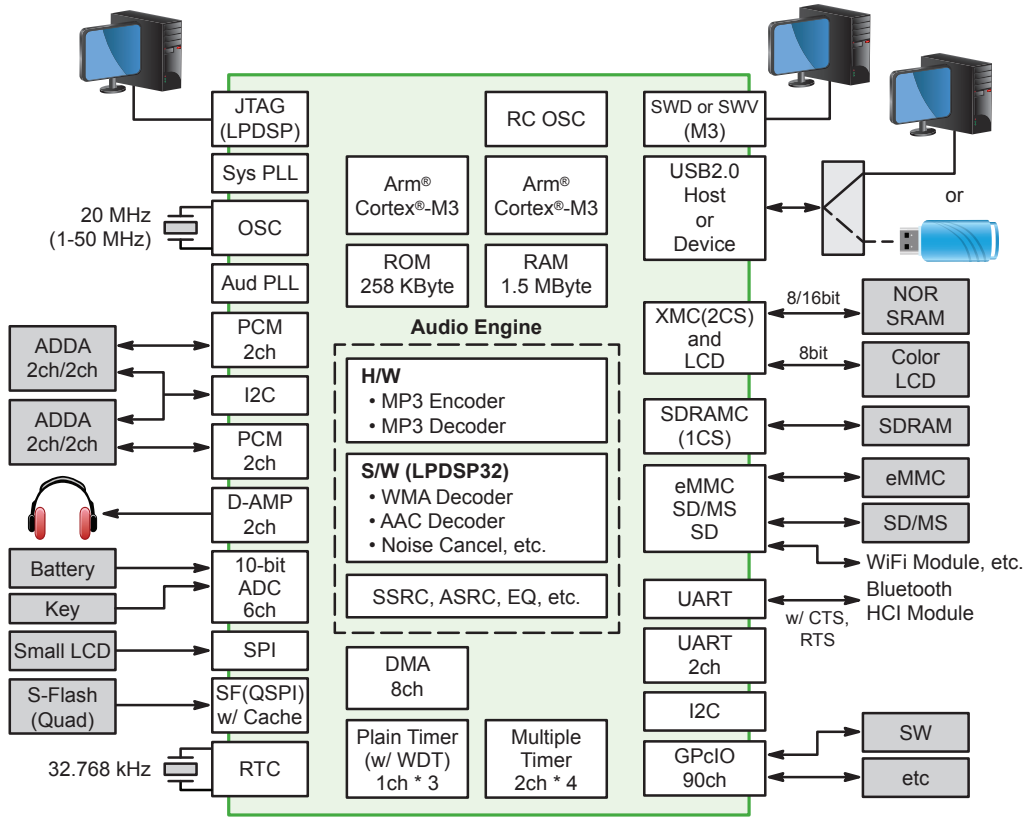

Device	Design Focus	Frequency (MHz)	RAM (KByte)	Arm Cortex-M3 Cores	SD Card I/F Channels	Features	Package
LC823450TA	Voice Recorder	160 @ 1.2 V Typ 100 @ 1.0 V Typ	1656	Single	3	Class D HP Amplifier	TQFP-128L
LC823450XC	Wearable	160 @ 1.2 V Typ 100 @ 1.0 V Typ	1656	Single	2	External LCD I/F (8-bit)	WLCSP-154
LC823450XD	High End	160 @ 1.2 V Typ 100 @ 1.0 V Typ	1656	Dual	3	Class D HP Amplifier; External LCD I/F (8-bit); HW MP3 Encoder	WLCSP-154

Portable Sound Solution ASSP

Ultra Low Power

- Over 120 hours playback with 2 x AAA battery (70% longer than popular portable music players)
- Advanced power management technology
- 4.8 mA @ 128 Kbps by MP3 hardware decoding
- 0.11 mW/MHz @ 1.0 V while Cortex®-M3 Single Core operation
- Integrated low power D class amplifier



Small Footprint

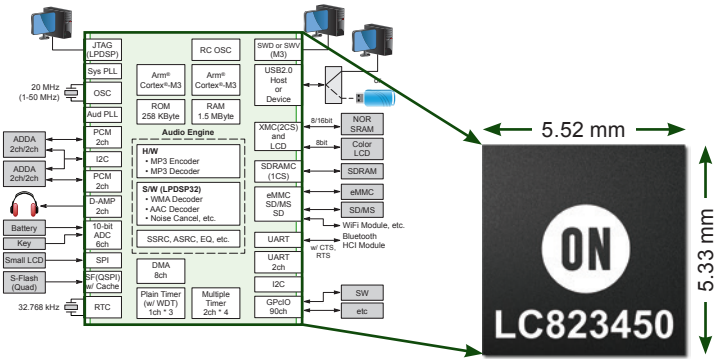

- 5.52 mm x 5.33 mm WLCSP-154 suitable for portable, wearable audio
- Highly integrated SoC (CPU+DSP+AUDIO)
  - Hi-Resolution Recording/Playback capability
  - Cortex®-M3 dual core
  - Proprietary 32-bit DSP (LPDSP32)
  - 1656 Kbyte internal SRAM

Turn Key Software Support

- Suitable for portable, wearable digital music
- Support wireless synchronized stereo playback



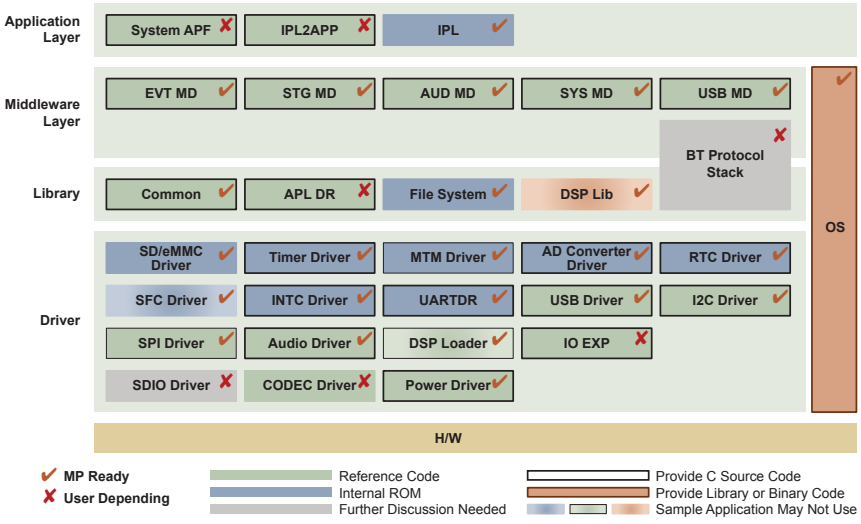

Portable Sound Solution ASSP Evaluation Kit

The LC823450XGEVK is an audio processing system Evaluation Kit used to demonstrate the LC823450. This part can record and playback, and offers high-resolution 32-bit & 192 kHz audio processing capability. It is possible to cover most of the functions necessary for portable audio with only this LSI. It has Dual CPU and DSP with high processing capability, and internal 1656K-Byte SRAM, which make it possible to implement large scale program. And it has integrated analog functions (low-power Class D HP amplifier, PLL, ADC etc.) so that PCB space and cost can be reduced, and it has various interface (USB, SD, SPI, UART, etc.) to make extensibility high. Also it is provided with various function including SBC/AAC codec by DSP and UART and ASRC (Asynchronous Sample Rate Converter) for Bluetooth audio. Low power consumption makes it suitable for portable audio devices, such as wireless headsets.

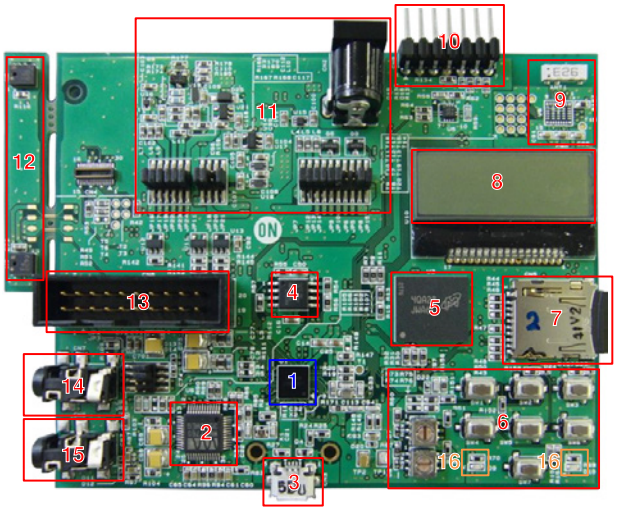

1 LC823450
2 Audio CODEC
3 USB Connector
4 Serial Flash
5 eMMC
6 Switches
7 microSD™
8 LCD
9 Bluetooth®
10 UART Connector
11 Power Supply Control
12 Digital Mic
13 ICE Connector
14 Headphone
15 Line Input
16 LEDs

LC823450XGEVK Evaluation Board

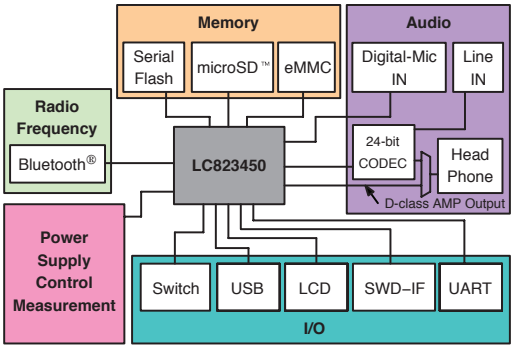

LC823450XGEVK Block Diagram

Key Features

- File Transfer Connecting to PC with USB
- MP3 Recording with USB Bus Power Supply
- MP3 Playback with USB Bus Power Supply
- Measurement of Current Consumption

RSL10 Bluetooth® Low Energy Technology Radio SoCs

With so many options for wireless available, what sets the RSL10 radio SoC family apart? Simple. It offers the industry's lowest power Bluetooth low energy technology.

Supporting 2 Mbps data rates provided by Bluetooth 5 (twice the speed as with previous Bluetooth generations), RSL10 enables advanced wireless functionality without compromising battery life. RSL10 can be easily integrated into any device.



Key Features

- Industry's lowest power (62 nW in Deep Sleep, 7 mW in Receive Mode)
- Supports Bluetooth low energy and 2.4 GHz proprietary protocols
- Flexible Voltage Supply Range (1.1 - 3.3 V)
- IP protection feature
- Available packages WLCSP-51, QFN-48, System-in-Package

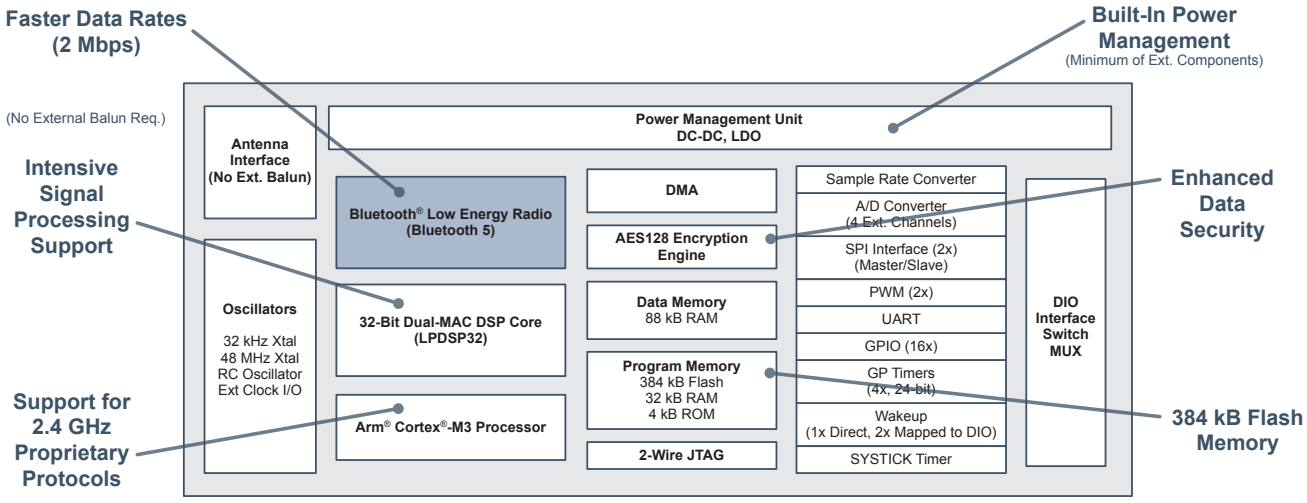

Development Tools

Software Development Kit (SDK)

- Eclipse-based software with a C Development Toolkit (CDT)
- GNU toolchain for programming the Arm Cortex-M3 processor
- Bluetooth low energy protocols, precompiled sample code and libraries, technical documentation



RSL10 Development Board

- Compliance with Arduino form factor
- Integrated PCB antenna
- On-board J-link adapter for easy debugging

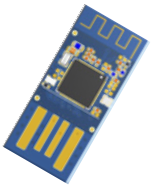

RSL10 USB Dongle

- Provided with Bluetooth Low Energy Explorer software to help verify or diagnose wireless connections during development

Audio Amplifiers

Device	Category	Description	Class	V_{IN} (V)	P_{out} (W)	I_Q (mA)	THD+N (%)	P_{SRR} (dB)	Package(s)
NCP2820	Speaker Amplifier	2.65 W Class D Amplifier, fast start up	D	2.5 to 5.5	2.65 W, 4 W, 5 V, 1% THD	2.15	0.05	65	CSP-9
NCP2823	Speaker Amplifier	3 W Class D Amplifier	D	2.5 to 5.5	2.65 W, 4 W, 5 V, 1% THD	1.8	0.08	77	CSP-9
NCP2890	Speaker Amplifier	1.0 W Audio Power Amplifier	AB	2.2 to 5.5	1.0 W, 8 W, 5 V, 0.1% THD	1.5	0.02	72	CSP-9, Micro8
NCP2993	Speaker Amplifier	1.3 W Class AB Amplifier, fast start up, zero pop	AB	2.5 to 5.5	1.25 W, 8 W, 5 V, 1% THD	1.5	0.02	80	CSP-9
NCP4894	Speaker Amplifier	1.8 W Differential Class AB Amplifier	AB	2.5 to 5.5	1.8 W, 8 Ω, 5 V, 1% THD	1.9	0.006	85	CSP-9, Micro-10, DFN-10
NCP2811	Headphone Amplifier	63 mW Stereo Headphone Amplifier, true ground reference	AB	2.9 to 5	63 mW, 16 Ω, 1% THD	6.5	0.01	100	CSP-12, UQFN-12, TSSOP-14
NCP2817	Headphone Amplifier	31 mW Long Play Stereo Headphone Amplifier, true ground reference	AB	1.6 to 5.5	31 mW, 16 Ω, 1% THD	2.3	0.019	100	CSP-12



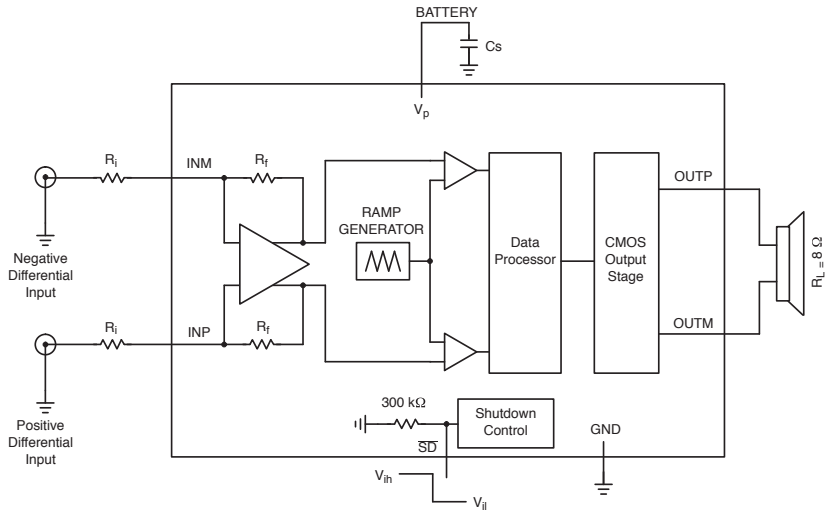

NCP2820 Application Diagram

Low Power Comparators

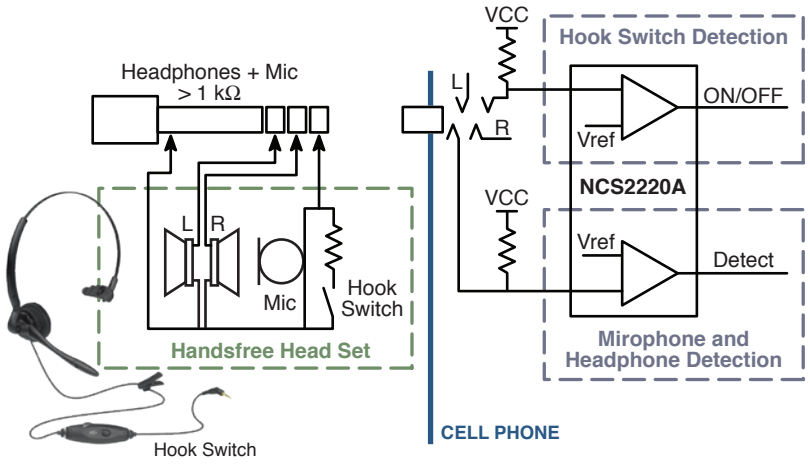

Typical Detection Circuit

Device	Configuration	V_S Min (V)	V_S Max (V)	I_Q/Channel (μA)	$t_{RESP(H-L)}$ (μs)	I_{OUT} (mA)	Output Type	Package(s)
NCS2200	Single	0.85	6	10	0.7	70	Complementary	SOT-23-5, SC-70-5, DFN-6
NCS2200A	Single	0.85	6	9	0.46	70	Complementary	UDFN-6
NCS2250	Single	1.8	5.5	145	0.05	42	Complementary	SOT-23-5, SC-70-5
NCS2202A	Single	0.85	6	9	0.46	70	Open Drain	UDFN-6
NCS2252	Single	1.8	5.5	145	0.05	42	Open Drain	SOT-23-5, SC-70-5
LMV331	Single	2.7	5	40	0.5	84	Open Drain	SOT-23-5, SC-70-5
NCS2202	Single	0.85	6	10	0.7	70	Open Drain	SOT-23-5, SC-70-5
NCS2220	Dual	0.85	6	7.5	0.5	60	Complementary	UDFN-8, UQFN-8
LMV393	Dual	2.7	5	35	0.5	84	Open Drain	Micro8, SOIC-8, UDFN-8
NCS3402	Dual	2.5	16	0.47	18	10	Open Drain	SOIC-8
NCV2393	Dual	2.7	16	9	0.8	20	Open Drain	SOIC-8
LMV339	Quad	2.7	5	35	0.5	84	Open Drain	SOIC-14, TSSOP-14

Audio Jack Detection

ON Semiconductor offers audio jack detection solutions to simplify 3/4 pole detection, key press detection, and moisture detection, while eliminating audio pop and click. The design of each product is optimized for minimal power consumption and package size.

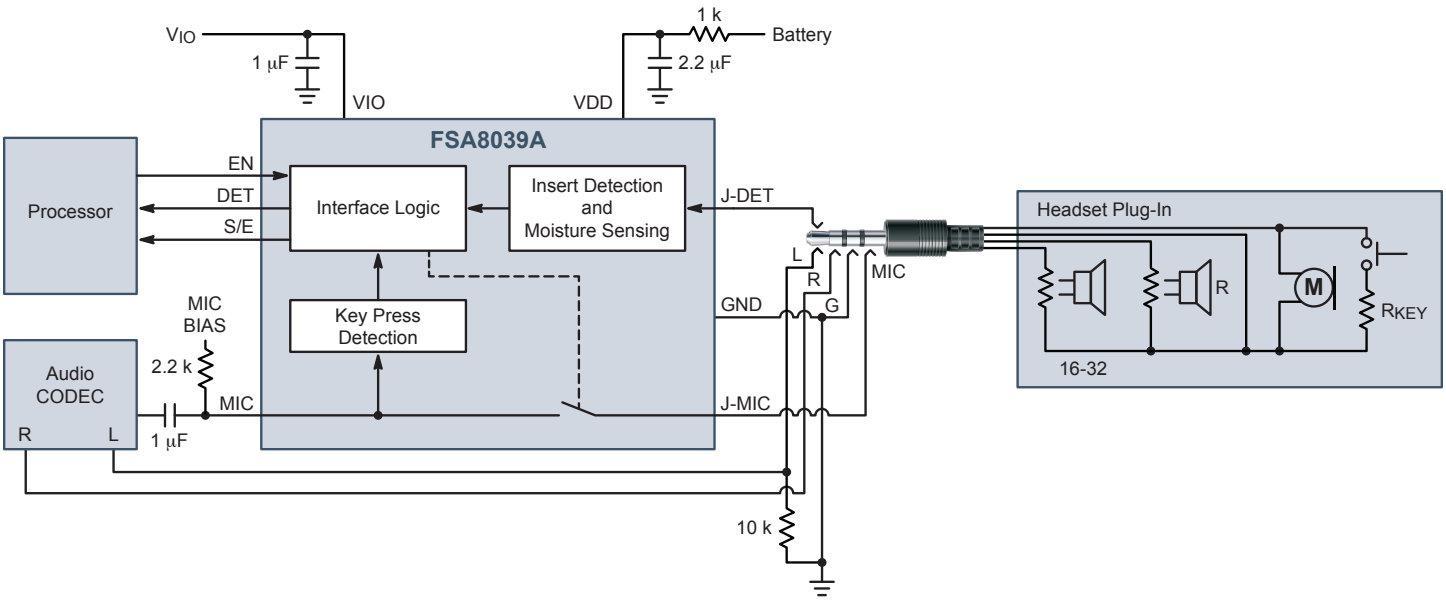

Audio Jack Detection System Diagram

Audio Jack/Headset Detection

Device	Category	V_{CC} (V)	Typical I_Q (µA)	Pop/Click Elimination	Send/End Key Detection	Moisture Detection	Volume Up/ Down Key Detection	3/4 Pole Polarity	LDO for Mic Bias	Package
NCS2300	Audio Jack Detection	1.6 to 2.75	7		✔					UDFN-6
NCS2302	Audio Jack Detection	1.6 to 2.5	17	✔	✔					UQFN-10
FSA8108B	Audio Jack Detection	2.7 to 4.5	35	✔	✔		✔		✔	CSP-12
FSA8008A	AJD & Config Switch	2.5 to 4.4	15	✔	✔					UQFN-10
FSA8028	AJD & Config Switch	2.5 to 4.4	15	✔	✔		✔			UQFN-10
FSA8029	AJD with Mic/Video Switch	2.5 to 4.3	20	✔	✔					UQFN-10
FSA8039A	AJD & Config Switch	2.5 to 4.5	20	✔	✔	✔				UQFN-10
FSA8049	AJD & Mic/GND Switch	2.5 to 4.4	0.1					✔		CSP-9
FSA8069	AJD & Impedance Detection	3.0 to 4.5	30	✔	✔	✔		✔	✔	CSP-12
FSA8500	AJD with (7) Key Press Detection	2.8 to 4.5	40	✔	✔	✔	✔	✔	✔	CSP-25

HiFi and Low Resistance Switches for Audio Signals

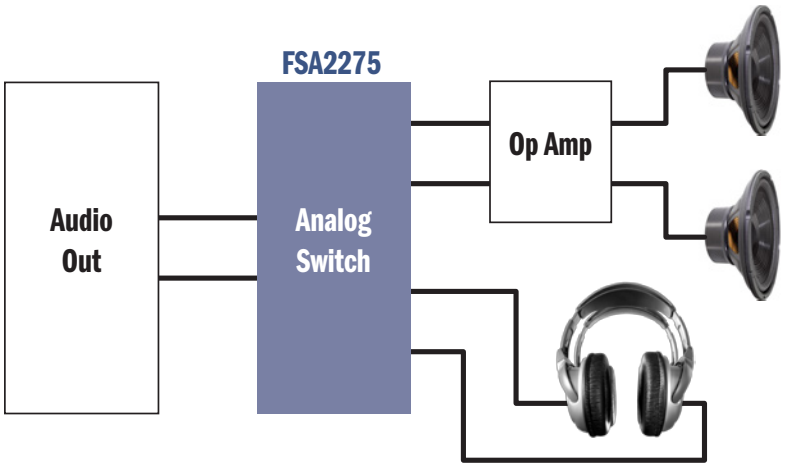

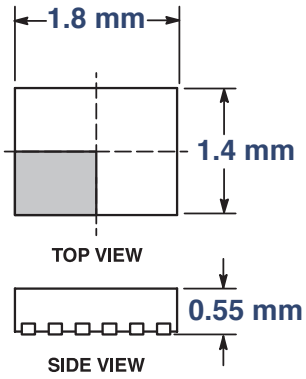

Device	Description	THD+N (dB)	V_{CC} Operating Range (V)	V_{IS} Max (V)	Packages
FSA2275	HiFi, Full Swing DPDT	-113	2.5 - 5.5	±3.0	µQFN-12
FSA2276	HiFi, Full Swing DPDT	-113	1.6 - 5.5	±3.0	µQFN-12
NLAS54404	HiFi, Full Swing DPDT	-108	–	2 VRMS	WLCSP-12
NLAS54405	HiFi, Full Swing DPDT	-108	3.3 or 5.0	-3 to VCC	WQFN-16
NLAS5157	Single SPDT	-74	1.65 - 4.5	0 to VCC	µDFN-6
NLAS3799B	Dual DPDT	-67	1.65 - 4.5	0 to VCC	µQFN-16
NLAS5223C	Dual SPDT	-62	1.65 - 4.5	0 to VCC	µQFN-10
NLAS2750	Dual SPDT	–	1.8 - 5.5	0 to VCC	µQFN-10



Key Performance Characteristics

- Excellent Audio Fidelity – Very Low THD to -113 dB Typical
- Wide 1.5 – 4.5 V Power Supply Range
- Extended Temperature Capable
- Low $R_{DS(on)}$, Tight Channel Matching

Mixed-Mode Switches for Audio Over USB Type-C Connector

Key Features

- High Bandwidth to support USB 2.0 over D+/D- Interface (Mixed Mode Devices)
- Ultra-Low THD+N to support HiFi Audio over D+/D- Interface (Mixed Mode Devices)
- Ultra-Low $R_{DS(ON)}$ to support GND/Mic switching over SBU1/SBU2 Interface (GND/MIC Switch)

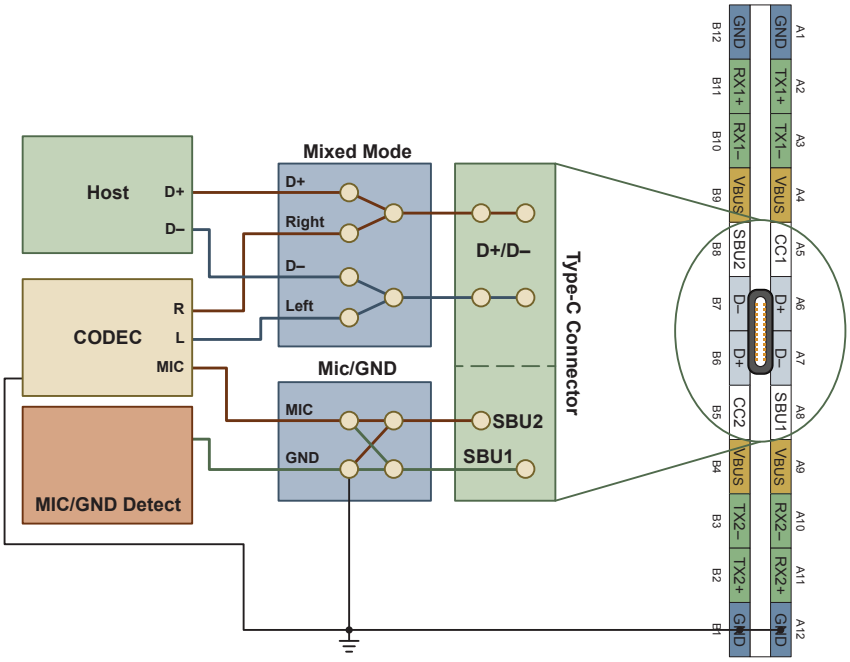

Mixed Mode Analog Switches (USB + Data over D+/D-)

Device	V_{CC} Operating Range (V)	Bandwidth (MHz)	THD+N 32 Ω Load 0.707 V_{RMS}	Default Mode	Package
NL3S588	3.3 or 5.0	580	-112 dB	Dp0/Dn0	uQFN-10
NL3S22UH	2.7 – 3.6	810	-113 dB	Data	uQFN-10
NL3S22AH	2.7 – 3.6	810	-113 dB	Audio	uQFN-10

Mic/GND Switch (Mic/GND over SBU1/DBU2)

Device	V_{CC} Operating Range (V)	V_{IS} Range (V)	Typical $R_{DS(ON)}$ Mic Path	Typical $R_{DS(ON)}$ GND Path	Package
NL3S325	1.6 – 3.6	0 – 3.6	46 mΩ	57 mΩ	WLCSP-9

Integrated Audio Switches (CCx, D+/D–, Mic/GND, SBUx)

Device	V_{CC} Operating Range (V)	Bandwidth (MHz)	THD+N	Typical $R_{DS(ON)}$ GND Path	Package
FSA4476	2.7 – 5.5	950	-110 dB	75 mΩ	WLCSP-25
FSA4480	2.7 – 5.5	600	-110 dB	50 mΩ	WLCSP-25

RF Antenna Tuning Solutions

ON Semiconductor offers system-level RF antenna tuning solutions designed to enhance antenna performance of smartphones and next-generation 5G devices. The antenna tuning sub-system is comprised of software and RF/control hardware. The RF components combine broad tuning range, high RF quality factor (Q), and frequency operation up to 4 GHz to form a flexible and comprehensive solution. These can be customized to meet the RF tuning needs of any smartphone design-from open-loop to advanced closed-loop tuning systems.

Our tunable RF solutions are ideally suited for LTE-A networks with advanced features, including: Carrier Aggregation, MIMO, and ASDiv functionality. The antenna tuning system is also suitable for emerging 5G New Radio (NR), basestations, and IOT devices.

- Reduced power consumption
- Enables thinner smartphone designs
- Faster data rates
- Greater coverage area of cell sites
- Fewer dropped or missed calls



Tuning for Any Smartphone

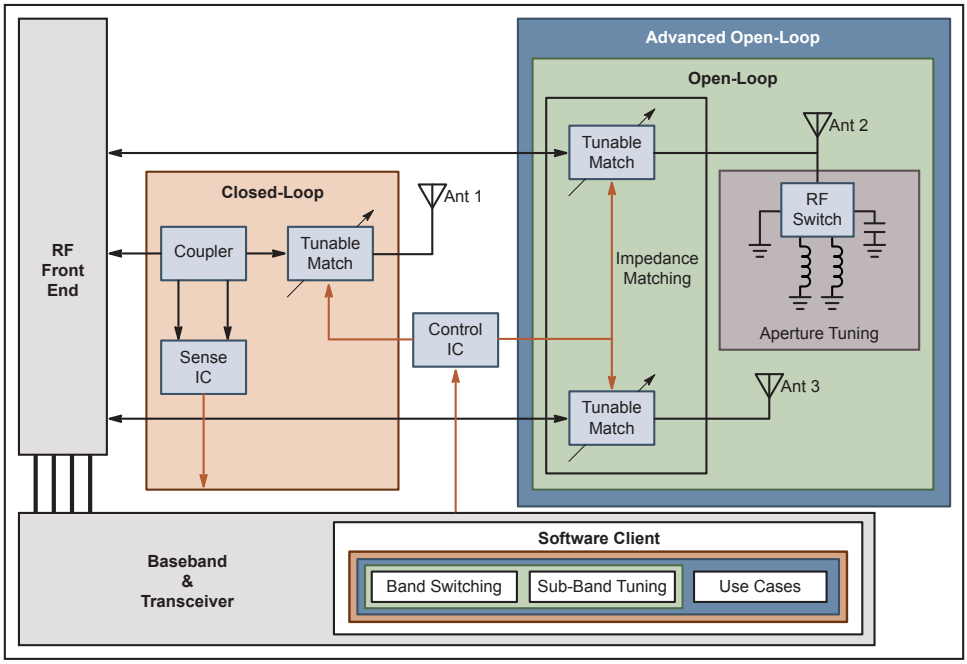

Open-Loop

Provides multiple tuning states to optimize performance in each band

Advanced Open-Loop

Uses sensor input to detect and adjust performance for certain conditions (e.g., head/hand, USB connected)

Fully Adaptive (Closed-Loop)

Detects environments and conditions and optimizes antenna performance

Integrated Passive Devices (IPD)

Efficient RF System-in-Package Solutions

Integrating passive devices into our HighQ™ copper platform gives a cost-effective, space-saving solution for all RF needs.

IPD Technology Characteristics

- Target frequency: 500 MHz to 40 GHz
- Low profile, minimal footprint
- Tight tolerance

Typical Applications

- Antenna Switch
- WiFi®/Bluetooth
- Power Amplifier
- Zigbee

Typical IPD Designs

- Baluns
- Couplers
- Diplexers
- Balanced Filters
- Splitters
- Matching networks



IPD Technology (R, L, C)

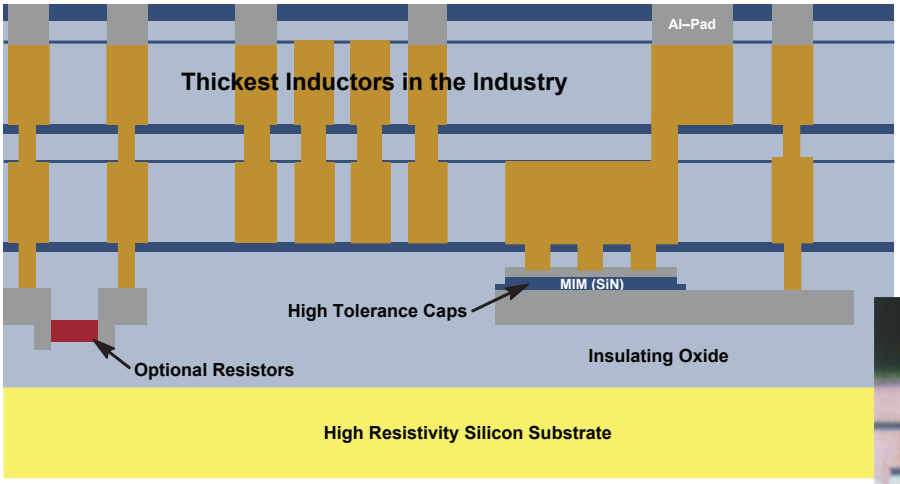

Performance

- Guaranteed ±5.0% capacitor tolerance
- Typical < 1% variance between capacitors on common IPD
- Dual Cu stack up of 12 µm for high Q inductors



Dual Copper Stackup with Full Length Stitched Via

RF

Single Ended Buffers

Clock Buffer with Integrated LDO

Key Features — NB3RL02

- Low additive noise: −149 dBc/Hz at 10 kHz offset phase noise
- 0.37 ps (rms) output jitter
- Limited output slew rate for EMI reduction (1 to 5 ns rise/fall time for 10−50 pF loads)
- Regulated 1.8 V externally available I/O supply
- ESD performance exceeds JESD 22
  - 2000 V Human−Body Model (A114−A)
  - 200 V Machine Model (A115−A)
  - 1000 V Charged−Device Model (JESD22−C101−A Level III)
- WLCSP-8 package

NB3RL02 has two CMOS outputs with clock request lines. Systems in need of TCXO clock will request clock from NB3RL02, and NB3RL02 powers the TCXO and delivers the requested clock.

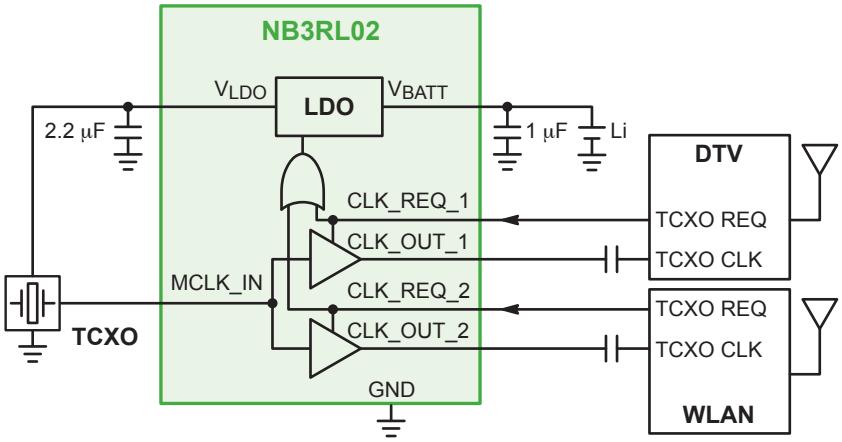

NB3RL02 Reduces Cost by Eliminating Multiple TCXOs

Clock Buffers for Wireless LAN and WiMax

Key Features — NB3L02, NB3L03

- 800 mV single ended outputs
- Low additive noise: -144 dBc/Hz at 10 kHz offset phase noise
- ESD performance exceeds JESD 22: 2 kV Human Body Model
- WLCSP-6 package

NB3L02 and NB3L03 are low-skew, low jitter, 1:2 and 1:3 clock buffers. The MCLK_IN pin has an AC coupling capacitor and will directly accept a square or sine wave clock input, such as a temperature compensated crystal oscillator (TCXO). The minimum acceptable input amplitude of the sine wave is 300 mV peak-to-peak.

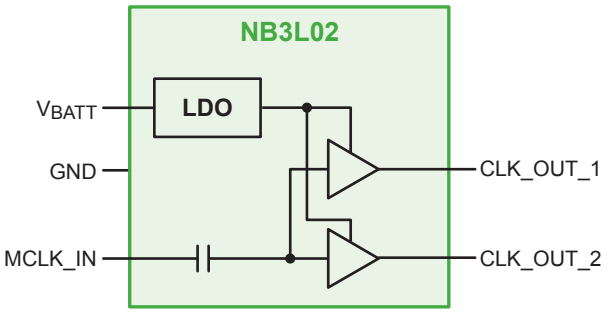

NB3L02 Simplified Block Diagram

RF

Smartphone

Recent adaptation of USB-C (Type-C) to smartphones for data transmission, power, and video on a single connector, enables faster charging and data rates up to 10 Gbps using a USB-C charging cable. While consumer enjoys one size, one end USB-C connector and cable, implementing USB-C designs includes challenges to meet requirements for compact size, thermal efficiencies, and low power consumption. ON Semiconductor provides broad USB-C & USB Power Delivery solutions for smartphone design implementation.

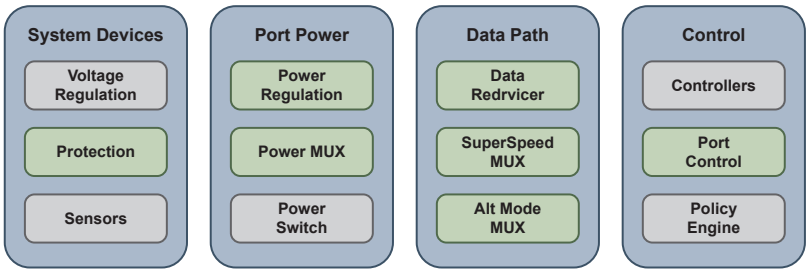

Block Diagram



System Devices

Function	Device	Description
Protection	ESDL2011	High Speed Data Line Protection, Bidirectional (1 V – Thunderbolt 3.0), 0.2 pF
	ESDL1531*	High Speed Data Line Protection (3.3 V - USB 3.x), (Tx/Rx Pairs), 0.3 pF
	ESD8111P	High Speed Data Line Protection (3.3 V – USB 3.x), (Tx/Rx Pairs), 0.4 pF
	ESDM3551	ESD Protection Diode, CC and SBU Protection (5.5 V – USB 3.x), 21 pF
	NSPM2052	ESD and Surge Protection Device, Vbat and Vbus Applications, 5 V
	NSPM0061	ESD and Surge Protection, 6.3 V
	NSPM0101	ESD and Surge Protection, 10 V, 60 A
	NSPM5131	ESD and Surge Protection Device, Unidirectional, 13.5 V
	NCS210	Current Sense Amplifier, Bidirectional Zero-Drift, 1% Max. Gain Error, 60 µV Offset
	NCS211	Current Sense Amplifier, Bidirectional Zero-Drift, 1% Max. Gain Error, 60 µV Offset
	NCS213	Current Sense Amplifier, Bidirectional Zero-Drift, 1% Max. Gain Error, 100 µV Offset
	NCS214	Current Sense Amplifier, Bidirectional Zero-Drift, 1% Max. Gain Error, 60 µV Offset
	FUSB252UMX	High Speed Digital (HSD) Port Protection Switch with Type-C CC
	FSUSB242UCX	USB Type-C Port Protection Switch
	NCP398	USB Type-C VCONN Overvoltage Protection IC

* Pending 1Q18.

Power Port

Function	Device	Description
Power Regulation	NCS2202	Comparator, Low Voltage, Open Drain
	NCS2200	Comparator, Complementary, Low Voltage
	NCS210	Current Sense Amplifier, Bidirectional Zero-Drift, 1% Max. Gain Error, 60 µV Offset
	NCS211	Current Sense Amplifier, Bidirectional Zero-Drift, 1% Max. Gain Error, 60 µV Offset
	NCS213	Current Sense Amplifier, Bidirectional Zero-Drift, 1% Max. Gain Error, 100 µV Offset
	NCS214	Current Sense Amplifier, Bidirectional Zero-Drift, 1% Max. Gain Error, 60 µV Offset
Power MUX	FPF2595UCX	Load Switch, Over-Voltage, Over-Current Protection with Adjustable Current-Limit Control, IntelliMAX™ 28 V
	FPF2895CUCX	Current Limit Load Switch with OVP and TRCB, 28 V, 5 A

Data Path

Function	Device	Description
Data Redriver	NB7NPQ7021M	USB 3.1 Dual Channel Linear Redriver, 3.3 V
	NB7NPQ701M	USB 3.1 Single Channel Redriver, 3.3 V
	NB7NPQ702M	USB 3.1 Dual Channel Redriver, 3.3 V
	NB7VPQ701M	USB 3.1 Single Channel Redriver, 1.8 V
	NB7VPQ702M	USB 3.1 Dual Channel Redriver, 1.8 V
SuperSpeed Mux	FUSB340TMX	USB 3.1 SuperSpeed Switch, 10 Gbps
Alt Mode MUX	NL3S2223	High-Speed USB 2.0 DPDT Switch
	NL3S22AH	USB 2.0 and HiFi Audio Switch
	NL3S325	Audio Jack GND/MIC Configuration Switch
	FSA4476UCX	Analog Audio Switch with Protection Function, USB Type-C

Control

Function	Device	Description
Port Control	FUSB302BMPX	Programmable USB Type-C Controller with PD (Default SNK)
	FUSB303TMX	Autonomous USB Type-C Controller with I2C and GPIO Control

Power Bank

USB-C (Type-C) is becoming the latest standard for accessories including power banks. ON Semiconductor offers both discrete and best-in-class integrated power bank solutions, which meet the latest USB-C and USB Power Delivery (PD) specifications. Our latest integrated, scalable power bank solutions enable a streamlined design process, and accelerate time to market, supporting a range of battery pack sizes.

System Devices

Function	Device	Description
Voltage Regulation	NCP1340	Quasi-Resonant Controller, High-Voltage, Featuring Valley Lock-Out Switching
	NCP1341	Quasi-Resonant Controller, High-Voltage, Featuring Valley Lock-Out Switching with Power Excursion Mode (PEM)
	NCP43080	Synchronous Rectifier Controller with LLD Function
	NCP4306	Secondary Side Synch Rec Driver for High Efficiency SMPS Topologies
	NCP4371	HVDCP Controller for Qualcomm Quick Charge 3.0
Protection	ESD8704	High Speed Data Line Protection, Unidirectional (3.3 V – USB 3.x)
	ESD8116	ESD Protection Array, USB 3.0
	ESD8118	ESD Protection Array, USB 3.0
	LC06111TMT	Battery Protection IC, Integrated Power MOSFET, 1-Cell Lithium-Ion Battery
	LC05711ARA	Battery Protection IC, Integrated Power MOSFET, 1-Cell Lithium-Ion
	LC05111CMT	Battery Protection Controller with Integrated MOSFET, 1-Cell Lithium-Ion
	FUSB252UMX	High Speed Digital (HSD) Port Protection Switch with Type-C CC

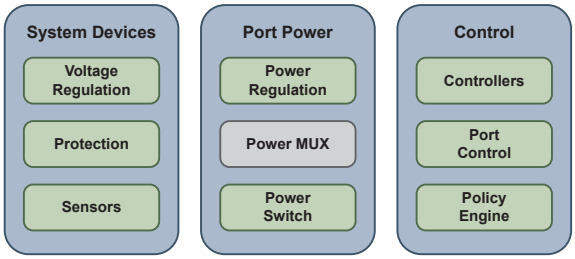

Block Diagram





Port Power

Function	Device	Description
Power Regulation	NCP81231	Buck Controller, USB Power Delivery and Type-C Applications
	NCP81239	4-Switch Buck Boost Controller, USB Power Delivery and Type C Application
Power Switch	FPF2280	Over-Voltage Protection Load Switch
	FPF2281	Over-Voltage Protection Load Switch
	FPF2290	Over-Voltage Protection Load Switch
	FPF2495	Load Switch, Over-Voltage, Over-Current Protection with Adjustable Current-Limit Control, IntelliMAX™ 28 V
	FPF2595	Load Switch, Over-Voltage, Over-Current Protection with Adjustable Current-Limit Control, IntelliMAX 28 V
	ECH8310	P-Channel Power MOSFET, -30 V, -9 A, 17 mΩ
	NTTFS4H05N	Power MOSFET, Single N−Channel, 25 V, 94 A, 3.3 mΩ
	MCH3375	Single P-Channel Power MOSFET, -30 V, 295 mΩ, -1.6 A
	BAT54AL	Schottky Diode, Dual Common Anode, 30 V
	BAT54CL	Schottky Diode, Dual Common Cathode, 30 V
	BAT54T	Schottky Barrier Diode
Power MUX	FPF2595UCX	Load Switch, Over-Voltage, Over-Current Protection with Adjustable Current-Limit Control, IntelliMAX 28 V
	FPF2895CUCX	Current Limit Switch with OVP and TRCB, 28 V / 5 A

Control

Function	Device	Description
Controllers/ Policy Engine	LC709501F	Power Bank Controller, USB Type-C & Quick Charge™ 3.0, for 1-Cell Li-Ion and Li-Poly Battery
	LC709511F	Power Bank Controller, USB Type-C & Quick Charge 3.0, for 1-Cell Li-Ion and Li-Poly Battery
Port Control	FUSB302	Programmable USB Type-C Controller with PD
	FUSB302B	Programmable USB Type-C Controller with PD (Default SNK)
	FUSB302TMPX	Programmable USB Type-C Controller with PD (Default SRC)
	FUSB303TMX	Autonomous USB Type-C Port Controller with I2C and GPIO Control
	FUSB307BMPX	USB Type-C Port Controller with USB-PD

Low-Voltage Portable LED Driver Topologies

White LED and RGB tricolor LEDs are widely used for backlighting small color LCD panels and keyboards, as well as indicators. High brightness LEDs are used as flash light sources in smart phones and digital cameras. These applications require optimized solutions which can maximize battery lifetime, as well as minimize the PCB area and height. ON Semiconductor has a variety of solutions using linear, inductive, and charge pump topologies. The inductive solution offers the best overall efficiency, while the charge pump solution takes up a minimal amount of space and height due to the use of low profile ceramic capacitors as the energy transfer mechanism. Linear drivers are ideal for color indicator as well as simple backlighting applications.

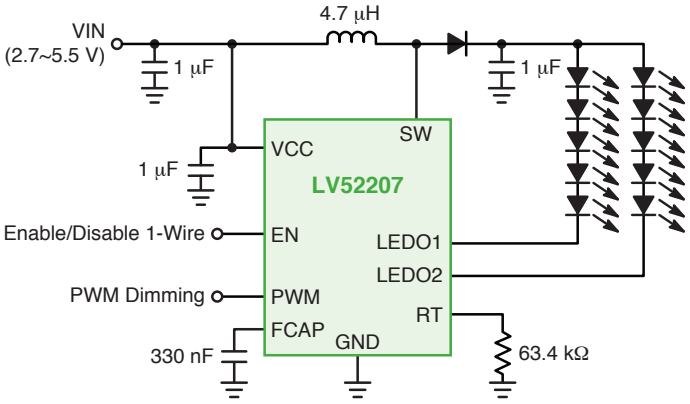

Inductive Boost Topology

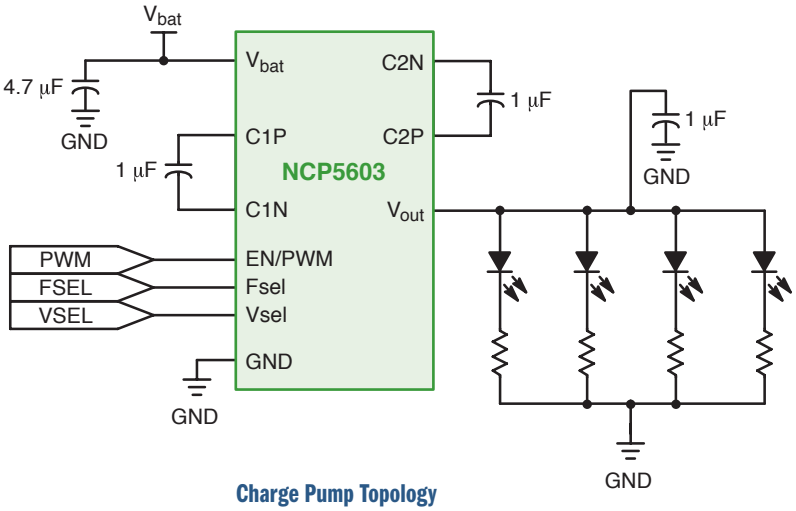

Charge Pump Topology



Charge Pump Topology

Charge Pump/White and RGB LED Drivers – for LCD Backlight, LED Flash/Torch and Indicator

Device	Input Voltage Range (V)	Number of Outputs	Total Output Current (mA)	Regulation Mode	Charge Pump Operating Mode	LED-LED Current Matching, Typ	Dimming Method	Number of Current Level/ Profile	Operating Quiescent Current, Typ (mA)	Shutdown Current (μA)	Package	Notes
NCP5603	2.85 - 5.5	1	200 mA DC, 350 mA pulse	Voltage	1X, 1.5X, 2X	–	PWM	Depends on system	1	2.5 typ	DFN-10	• Backlight • 4.5 / 5 V output • Short circuit protection
NCP5623B/C	2.7 - 5.5	3 (Independent)	90	Current	1X, 2X	±0.5%	I2C	32/ quasi-log	0.35	0.8 typ	LLGA-12	• RGB illumination • Backlight • Built-in "gradual illumination" • B & C versions have different I2C addresses

Inductive Boost and Buck Topology

Inductive-Boost White-LED Drivers – for Backlighting and Torch/Flash Applications

Device	Input Voltage Range (V)	Max Output Volt, Typ (V)	Output Current (mA)	Condition	Number of LEDs/ Configuration	Switching Mode/ Frequency	Dimming Method	Efficiency (%)	Operating Quiescent Current, Typ (mA)	Shutdown Current, Typ (μA)	Package	Notes
NCP1529	2.7 - 5.5	3.9	1	Vout 1.2 V, Vin 3.6 V	1	PWM/PFM 1.7 MHz	PWM	96	28	0.3	TSOP-5, uDFN-6	• Flash/Torch • Auto-switching between PWM and PFM mode at light load
NCP1422	1.0 - 5.0	5	800	Vout 3.3 V, Vin 2.5 V	1 for flash	PFM, up to 1.2 MHz	PWM	94	1.3 μA	0.05	DFN-10	• Flash/Torch • Internal synchronous rectification
NCP5005	2.7 - 5.5	24	40	Over 5 LED, Vin 3.6 V	2 to 5/ series	PFM, up to 2.25 MHz	PWM	90	–	0.3	TSOP-5	• Backlight • Isw = 350 mA
LV52204	2.7 - 5.5	40	30	Vout 30 V, Vin 3.7 V	2 to 10 / Series	600 kHz	1-wire & PWM	90	3	0.1	UDFN-6	• Backlight • Isw = 750 mA
LV52207	2.7 - 5.5	40	30	Vout 30 V, Vin 3.7 V	2 to 10 / Series	600 kHz/1.2 MHz	1-wire & PWM	90	3	0.1	WLP-9	• Backlight • Isw = 750 mA

LCD Display Bias

The LV52133 and LV52134 generate user-programmable dual-out votages with a single inductor. Each device features short circuit protected output stages, small footprint, and ultra-low standby current.

Key Features

- Dual-outputs with single-inductor architecture
- Adjustable output voltages via I2C
- Short Circuit Protection

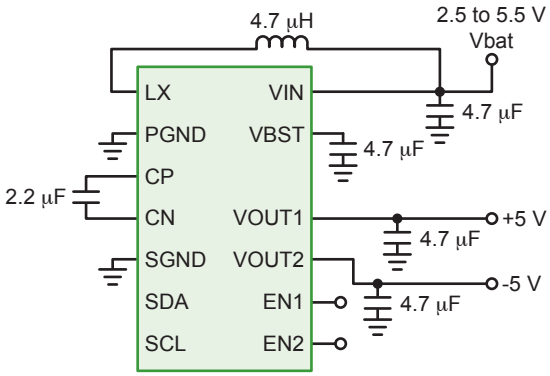

Device	Input Voltage Range	Default Output Voltage	Output Voltage Setting Range	Output Current	Standby Current	Package
LV52133A0XA LV52134A0XA	2.5 to 5.5 V	V_{OUT1} = +5.0 V V_{OUT2} = -5.0 V	V_{OUT1}: +4.1 to +5.7 V V_{OUT2} : -4. V to -5.7 V (100 mV step)	200 mA (V_{OUT1}); 100 mA (V_{OUT2})	0.3 µA	WLP-15J
LV52133A5XA LV52134A5XA		V_{OUT1} = +5.5 V V_{OUT2} = -5.5 V				

NOTE: LV52133 and LV52134 differ with respect to I2C control address.



Haptic Drivers

LC898302A

The LC898302A is a haptic driver able to drive LRA and ERM. The drive frequency is automatically adjusted to the resonance frequency of the linear vibrator without external components.

Unique Features

- Drive LRAs with automatic tuning and breaking
- Drive ERM; drive voltage controlled via PWM

Other Features

- Supply voltage = +2.7 to +4.5 V
- I_{out} max = 200 mA
- Bridge $R_{DS(on)}$ = 2 x 2 Ω (4 x 2 Ω MOSFETs embedded)
- Low standby current

Benefits

- High efficiency
- Easy handling (no adjustment for any LRA)
- Strong vibration

Device	Description	Package
LC898302A	Haptic Driver for LRA and ERM	WLCSP-6

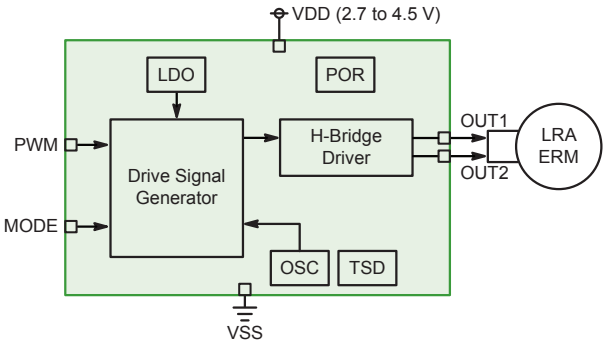

Block Diagram

LC898301

The LC898301 is an extended supply range version of the LC898300 LRA driver, compatible with cellular battery voltage. The architecture chosen enables strong vibration in minimal board space. Moreover, the LC898301 exhibits superior vibration performance.

Unique Features

- Automatically adjust driving frequency (ON Semiconductor patent)
- Minimized start-up and brake period (Quick stop)
- Automatically stop braking to avert counter vibration

Other Features

- Supply voltage = +3.0 to +5.5 V
- I_{out} max = 200 mA
- Bridge $R_{DS(on)}$ = 2 x 2 Ω (4 x 2 Ω MOSFETs embedded)
- No peripheral component required (only 0.1 µF cap)
- Low power consumption

Benefits

- High efficiency
- Easy handling (no adjustment for any LRA)
- Strong vibration
- Fault-detection
- Battery direct supply
- Fully configurable through I2C

Device	Description	Package
LC898301XA	Haptic Driver for LRA	WLCSP-8
LC898301AXA	Haptic Driver for LRA with Immersion System	WLCSP-8

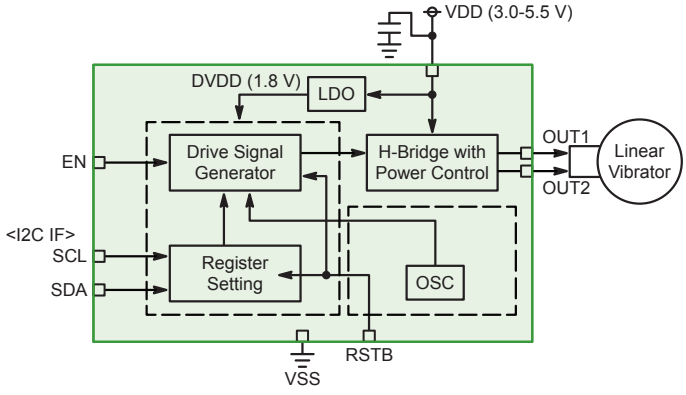

Block Diagram

Arm® Core DC-DC Converters

Key Features

- High regulating performance from 0.6 V to 1.4 V
  - Modular efficiency with fragmented power stage
  - Dynamic voltage scaling per output steps of 6.25 mV by I2C
  - Tight accuracy of ±1%, due to differential sensing
- Fast transient response
  - Proprietary PFM to PWM transition with equivalent performance to PWM only
  - Thermally handle high peak current demands up to 10 ms
  - Flexible design to transient handling output capacitor from 22 µF to 100 µF



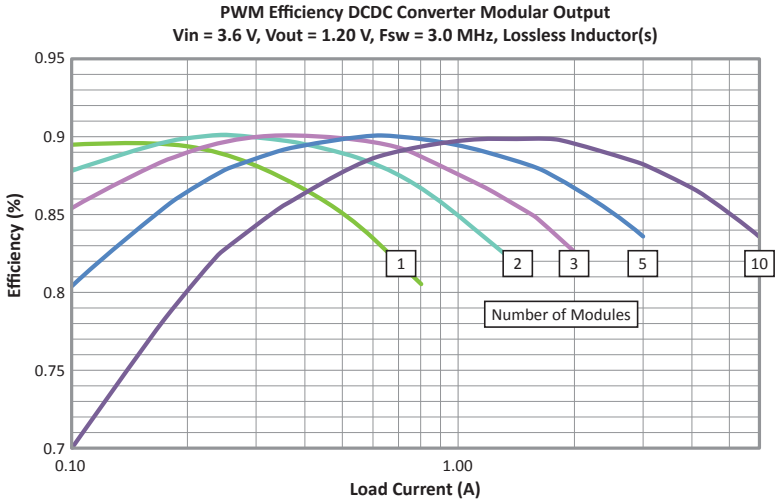

Device	V_{IN} (V)	V_{OUT} (V)	I_{OUT} (A)	f_{SW} (MHz)	Control	Features	Package
NCP6338	2.3 – 5.5	0.6 – 1.4	6.0	3.0	I²C; VSEL	Modular power stage; Differential sensing	WLCSP-30
NCP6335	2.3 – 5.5	0.6 – 1.4	4.0	3.0	I²C; VSEL	Transient load helper	WLCSP-20
NCP6343	2.3 – 5.5	0.6 – 1.4	3.5	3.0	I²C	Dynamic voltage scaling	WLCSP-15

Peripheral DC-DC Converters

Key Features

- High efficiency conversion - up to 94% - over large input & output voltage range
- High switching frequency - up to 6.0 MHz - reduces external component size (inductor down to 220 nH)
- Design flexibility with adjustable resistor bridge, independent enable control, power good or mode selection pin

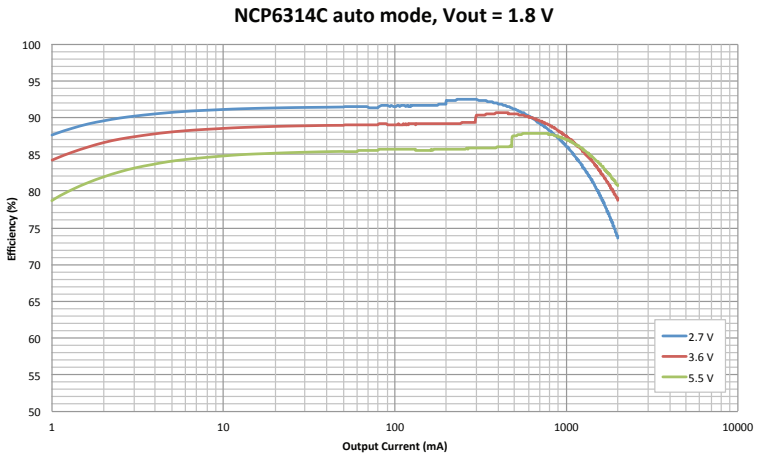

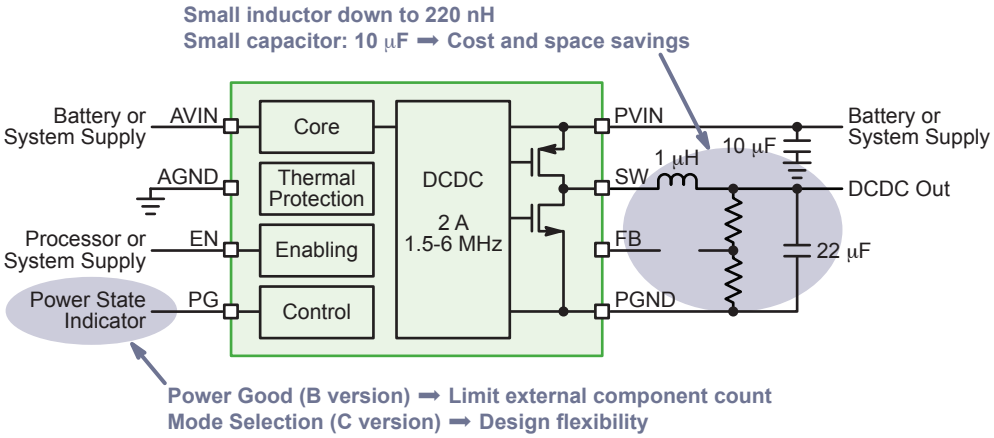

Device	V_{IN} (V)	V_{OUT} (V)	I_{OUT} (A)	f_{SW} (MHz)	Operating Mode	Features	Package(s)
NCP1521B	2.7 – 5.5	0.9 – 3.3	0.6	1.5	PFM/PWM	–	TSOP-5, UDFN-6
NCP1522B	2.7 – 5.5	0.9 – 3.3	0.6	3	PFM/PWM	–	TSOP-5, UDFN-6
NCP1529	2.7 – 5.5	0.9 – 3.3	1.0	1.7	PFM/PWM	–	TSOP-5, UDFN-6
NCP6324	2.5 – 5.5	0.6 – 5.0	2.0	3	PFM/PWM	Mode Selection	WDFN-8
NCP6332B	2.3 – 5.5	0.6 – 5.0	1.2	3	PFM/PWM	Power Good	UDFN-8
NCP6332C	2.3 – 5.5	0.6 – 5.0	1.2	3	PFM/PWM	Mode Selection	UDFN-8
NCP6334B	2.3 – 5.5	0.6 – 5.0	2.0	3	PFM/PWM	Power Good	UDFN-8
NCP6334C	2.3 – 5.5	0.6 – 5.0	2.0	3	PFM/PWM	Mode Selection	UDFN-8
NCP6354	2.3 – 5.5	0.6 – 5.0	2.0	3	PWM	Power Good	UDFN-8

Mid Scale Power Management Integration

Key Features

- Extensive IP library
- Flexibility for platforms derivatives with full programmability by I2C
- Offers real time load management with Dynamic Voltage Scaling
- High performance
  - High efficiency (up to 96%) and low quiescent current (<100 µA) to improve battery life
  - Low noise LDO (30 µVrms @ 100 Hz-100 kHz) meets the latest sensors requirements
- Quick turn around and time to market solutions
- WLCSP, QFN packages

Core
- Vin 2.3 - 5.5 V
- Bandgap
- Oscillator
- Biasing

+

BUCKs
- Vin 2.3 - 5.5 V
- Vout 0.6 - 5.5 V
- Up to 6.0 A/ channel
- Dynamic voltage scaling

+

LDOs
- Low noise, low Iq
- High PSRR
- Vin 1.7 - 5.5 V
- Vout from 1.0 - 3.3 V
- Up to 300 mA/ channel

+

Features & Monitors
- 10-bit ADC
- I2C / OTP
- Sequencer
- External sync
- Individual enable
- Power Good

+

Customization
- Flash LED
- Load switch
- Boost/bypass
- Buck/boost
- Battery charger
- Clock Generator
- Memory
- Wireless Power

Device	DC-DC (mA)	LDO (mA)	Package(s)
NCP6925	2 x 1000	5 x 300	CSP-36
NCP6924	2 x 1000	2 x 300, 2 x 150	CSP-30
NCP6914	1 x 800	4 x 300	CSP-20
NCP6915	1 x 600	1 x 300, 4 x 150	CSP-16

LDO Regulators

The LDO portfolio from ON Semiconductor provides solutions for all portable and wearable applications. Addressing the unique needs of these applications for reliable communication, low power, low quiescent current and long battery life plus small footprint, our LDOs offer 'best in class' performance, quality, and cost.

Device	I_O Typ (mA)	I_q Typ (µA)	V_{in} Min (V)	V_{in} Max (V)	V_O (V)	PSRR (dB)	Noise (µVrms)	Package(s)
NCP167	700	100	1.9	5.5	1.8, 2.8, 2.85, 3.0, 3.3, 3.5	85	8.5	CSP-4, XDFN-4
NCP133	500	80	0.8	5.5	0.9, 1.0, 1.05, 1.1, 1.15, 1.2, 1.25, 1.3, 1.5, 1.8, Adj	80	40	XDFN-6
NCP161	450	20	1.9	5.5	1.8, 2.5, 2.8, 2.85, 3.0, 3.3, 3.5, 4.5, 5.0, 5.14	90	10	CSP-4, XDFN-4
NCP114	300	50	1.7	5.5	1.0, 1.05, 1.1, 1.2, 1.25, 1.3, 1.5, 1.8, 2.1, 2.6, 2.8, 2.85, 3.0, 3.1, 3.3, 3.45, 3.5	75	60	uDFN-4, TSOP-5
NCP154	300/300	55	1.9	5.25	1.5/2.8, 1.8/2.7, 1.8/2.8, 1.8/2.9, 1.8/3.0, 2.8/2.7, 2.8/2.8, 3.0/1.8, 3.0/3.0, 3.1/3.1, 3.3/1.8, 3.3/2.8, 3.3/2.85, 3.3/3.0, 3.3/3.3	75	75	XDFN-8
NCP160	250	20	1.9	5.5	1.8, 2.5, 2.8, 2.85, 3.0, 3.3, 3.5, 4.5, 5.0, 5.14	90	10	CSP-4, XDFN-4
NCP163	250	120	2.2	5.5	1.8, 1.825, 1.9, 2.6, 2.75, 2.8, 2.85, 2.9, 2.925, 3.0, 3.3, 5.0	92	6.5	WLCSP-4, XDFN-4
NCP110	200	18	1.1	5.5	0.6, 0.8, 0.85, 1.05, 1.1,1.2, 1.8, 2.8	95	8.8	WLCSP-4, XDFN-4
NCP170	150	0.5	2.2	5.5	1.2, 1.5, 1.8, 2.5, 2.8, 3.0, 3.3	40	85	SOT-563, XDFN-4

Performance Leadership



Ultra-Low V_{IN} of 1.1 V
NCP110



Ultra-Low I_Q of 500 nA
NCP170



PSRR of 92 dB
NCP163



0.8 mm x 0.8 mm
XDFN-4



0.65 mm x 0.65 mm
CSP-4

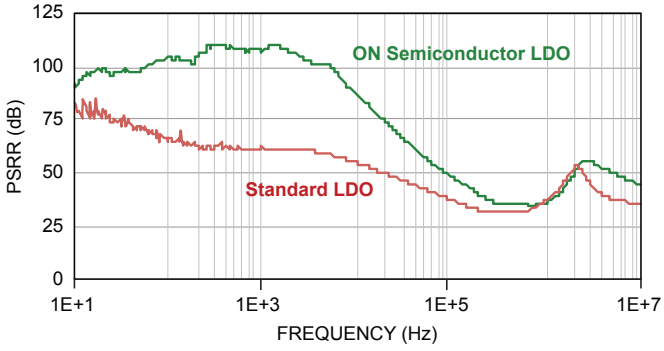

Industry Leading High PSRR Performance

Li-ion Battery Protection

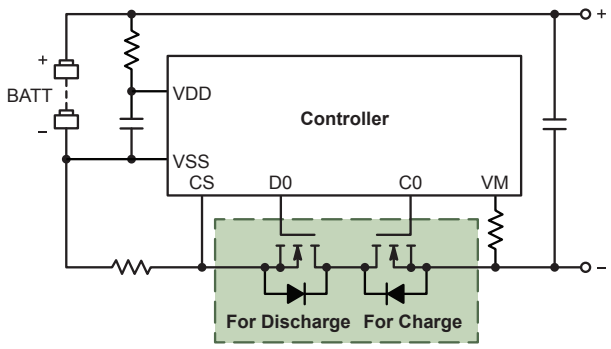

Dual MOSFET Configuration

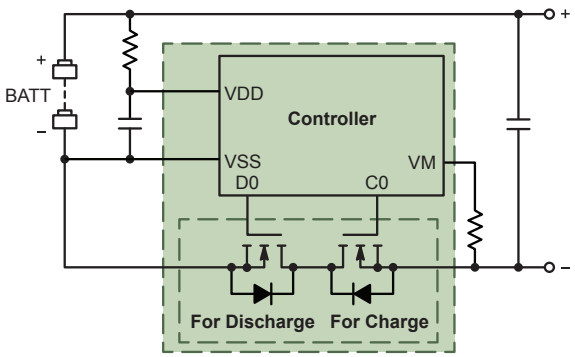

2-in-1 Configuration
(Controller + Dual MOSFET Integrated Package)

Dual MOSFETs

Device	Configuration	Polarity	V_{SSS} Max (V)	V_{GSS} Max (V)	I_S (DC) (A)	$R_{SS(ON)}$ @ V_{GS} = 4.5 V Min/Typ/Max (mΩ)	$R_{SS(ON)}$ @ V_{GS} = 2.5 V Min/Typ/Max (mΩ)	Package(s)
CPH6636R	Dual	N-Channel	24	±12	6	15.0/17.5/20.0	19.5/24.5/29.5	CPH-6
ECH8693R	Dual	N-Channel	24	±12	11	5.6/8.5/10.4	7.8/13.0/18.2	ECH-8
ECH8695R	Dual	N-Channel	24	±12.5	11	5.6/7.0/9.1	7.5/9.5/13.3	ECH-8
ECH8697R	Dual	N-Channel	24	±12	10	7.7/11.0/14.3	11.4/19.0/26.6	ECH-8
EFC4612R-S	Dual	N-Channel	24	±12	6	24/39/45	33.5/58/72	EFCP
EFC4619R	Dual	N-Channel	24	±12	6	13.5/19.8/23.0	18.5/27.0/35.0	EFCP
EFC4621R	Dual	N-Channel	24	±12	9	10.8/15.5/18.0	14.9/23.0/30.0	EFCP
EFC4626R	Dual	N-Channel	24	±12	5	29.2/37.5/46.2	42.6/54.0/72.4	EFCP
EFC6601R	Dual	N-Channel	24	±12	13	6.6/9.5/11.5	9.0/13.0/17.0	EFCP
EMH2418R	Dual	N-Channel	24	±12	8.5	9.1/13.0/16.9	13.8/23.0/32.2	EMH
EFC3C001NUZ	Dual	N-Channel	20	±10	6	17.0/23.0/30.0	24.5/35.0/56.0	EFCP
EFC3J018NUZ	Dual	N-Channel	20	±10	23	2.5/3.6/4.7	3.3/4.75/9.0	EFCP
EFC4627R	Dual	N-Channel	12	±10	6	18.5/23.9/29.5	29.3 / 37.7/50.5	EFCP
EFC6602R	Dual	N-Channel	12	±12	18	3.1/4.5/ 5.9	5.2/7.5/11.0	EFCP
EFC6604R	Dual	N-Channel	12	±12	13	6.0/7.5/ 9.0	10.0/12.6/17.7	EFCP
EFC8811R	Dual	N-Channel	12	±8	27	1.8/2.3/ 3.2	2.7/4.0/6.3	EFCP

NOTE: $R_{SS(ON)} = R_{DS(ON)} \times 2$.

Li-ion Battery Protection

Battery Protection Controllers with Integrated MOSFETs for One-Cell Batteries

Device	Adjustable Range			V_{SSS} Max/ V_{GSS} Max (V)	$R_{SS(ON)}$ @ V_{GS} = 4.5 V Min/Typ/Max (mΩ)	$R_{SS(ON)}$ @ V_{GS} = 3.1 V Min/Typ/Max (mΩ)	Features	Package(s)
	V_{OV} Range (V)	V_{UV} Range (V)	I_{OC}/I_{OCH} Range (A)					
LC05111CMT	4.0 to 4.5	2.2 to 2.7	2 to 8	24/±12	8.8/11.2/14.0	10.4/13/18.2	Auto Wake-up, 0 V Charge	WDFN-6
LC05112CNMT	4.0 to 4.5	2.2 to 2.8	2 to 8	24/±12	8.8/11.2/14.0	10.4/13/18.2	–	WDFN-6
LC05132C01NMT	4.0 to 4.5	2.2 to 2.8	2 to 8	24/±12	8.8/11.2/14.0	10.4/13/18.2	Reset Function **	WDFN-6
LC06111TMT	4.1 to 4.6	2.2 to 2.8	2 to 8	12/±12	6.6/8.4/10.6	8.6/10.8/15.2	Auto Wake-up, 0 V Charge	WDFN-6
LC05711ARA	4.1 to 4.6	2.2 to 2.8	2 to 16	20/±10	3.8/4.7/5.6	4.4/5.4/6.9	Auto Wake-up, 0 V Charge	ECP-30
LC05732ARA	4.1 to 4.6	2.1 to 2.7	2 to 16	20/±10	3.8/4.7/5.6	4.4/5.4/6.9	Reset Function **	ECP-30

** Forced off of charge and discharge FET.

One-Cell Li-Ion Battery Protection Controllers

Device	Adjustable Range						Features	Package(s)
	V_{OV} Range (V)	V_{UV} Range (V)	V_{OC} Range (mV)	V_{OC2} Range (mV)	V_{SHRT} Range (mV)	C_{OCH} Range (mV)		
LC05511XA	4.1 to 4.55	2.0 to 3.3	3 to 30	3 to 30	20 to 70	-30 to -3	Auto Wake-up, 0 V Charge	WLCSP-6
LC05551XA	4.1 to 4.55	2.0 to 3.3	3 to 30	3 to 30	20 to 70	-30 to -3	Auto Wake-up, 0 V Charge , Reset Function **	WLCSP-8

** Forced off of charge and discharge FET.

Switching Battery Chargers

Key Features

- Sized for micro USB connector (USB BC1.2) with 1.5 A, 1.6 A, 1.8 A, 2.5 A charging current
- Automatic input current limit adapts charging current to the maximum capability of the power source; proven charging time decrease by 10 minutes
- Integrated 28 V over voltage protection with unique negative voltage support
- Up to 1 A embedded boost USB OTG saves BOM cost
- Automatically disconnects battery at end of charge, with reconnect in few seconds in case of peak current activity (GSM for instance)
- Instant turn-on at cable insertion when battery is weak
- Enable smart fast charging ports with input voltage capability up to 16 V (NCP1855)

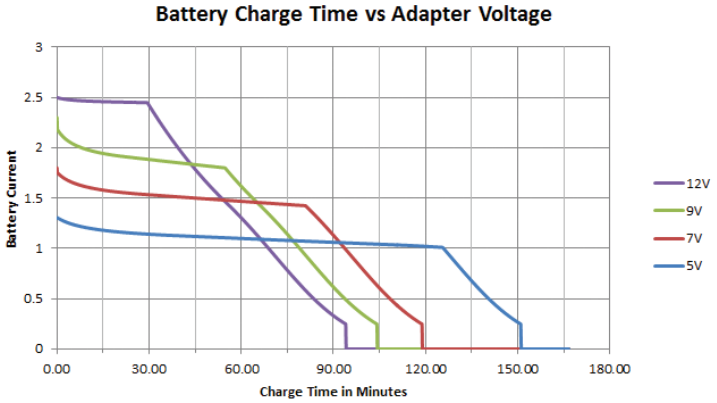

NCP1855 Charging Profile for 4.2 V, 2500 mAh Battery Pack, Input Source Limited to 1 A

Device	Charging Current Max (A)	Pre-Charge Current Max (mA)	OTG Boost Current Max (mA)	V_{CC} Max (V)	OVP (V)	I2C	Automatic Input Current Limiting	Dual Path Management	Protected USB PHY Supply (mA)	Battery Temperature Sensing	Package
NCP1850	1.5	450	250	7	+28	400 kHz	Yes	Yes (external)	30	Threshold	WLCSP-25
NCP1851	1.6	300	500	7	+28	400 kHz / 3.4 MHz	Yes	Yes (external)	50	JEITA	Flip-Chip-25
NCP1852	1.8	300	500	7	+28/–20	400 kHz / 3.4 MHz	Yes	Yes (external)	50	JEITA	Flip-Chip-25
NCP1854	2.5	300	500	7	+28	400 kHz / 3.4 MHz	Yes	Yes (external)	50	JEITA	Flip-Chip-25
NCP1855	2.5	300	500	16	+28	400 kHz / 3.4 MHz	Yes	Yes (external)	50	JEITA	Flip-Chip-25



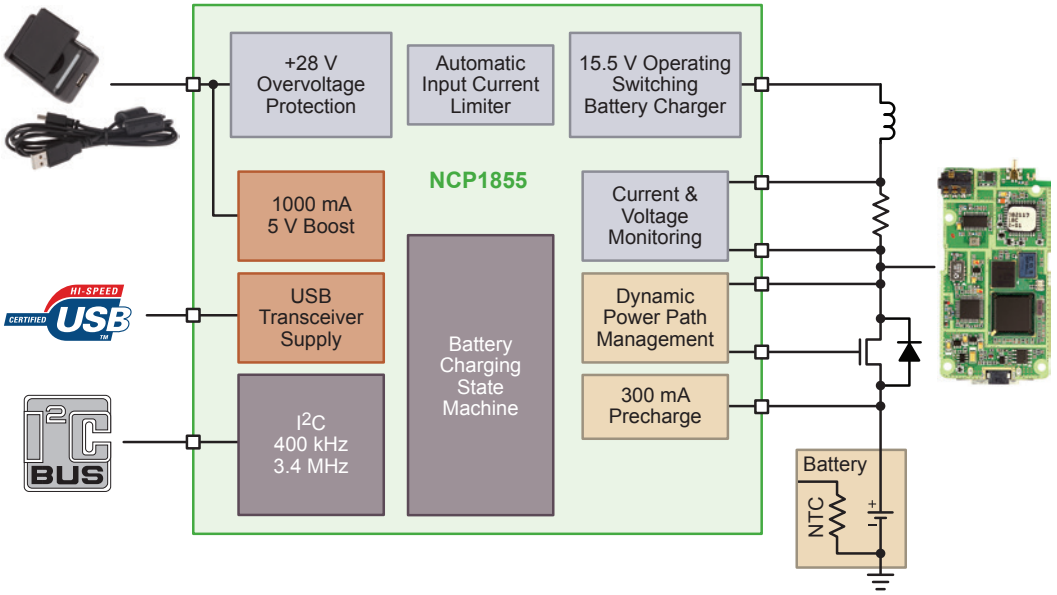

LC709203F High Accuracy Fuel Gauge LSI

Fuel Gauge for 1 Cell Li+ with Low Power and with No Sense Resistor

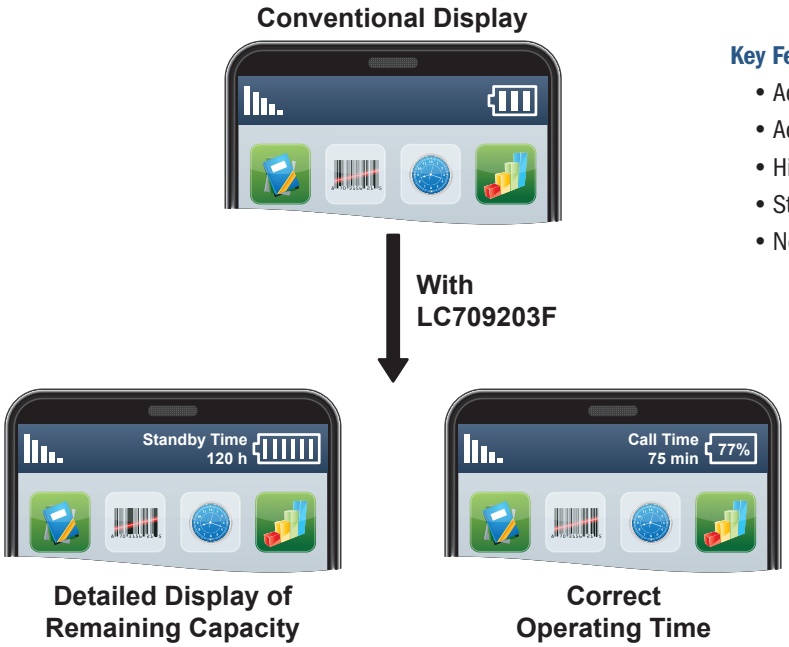

Key Features

- Accuracy of remaining capacity ±2.8% (0 ~ +50°C)
- Active mode current of 15 μA
- Hibernate mode current of 2 μA
- Standby mode current (RAM retention) of 0.1 μA
- No need for sense resistor for current detection

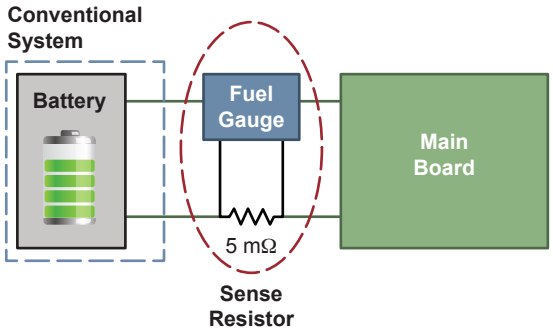

ON Semiconductor Solution (No Sense Resistor)

- No power loss
- No heat generation

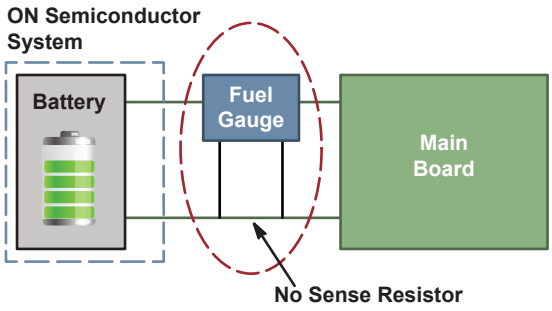

AirFuel™ Wireless Charging

Loosely Coupled Wireless Charging Features

- Spatial Freedom; no alignment or direct contact to transmitter is required
- Charge multiple devices at once through surfaces
- Can charge in the presence of metal objects such as coins or keys

High Efficiency Rectifiers

- Ultra low VF
- DFN packages ideal for space constrained applications
- Specifically designed for AirFuel wireless charging receiver
- Half bridge provides high degree of routing flexibility

AirFuel™ Alliance

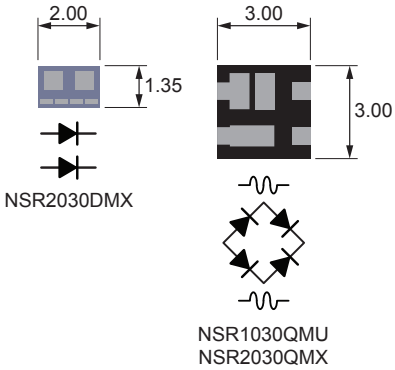

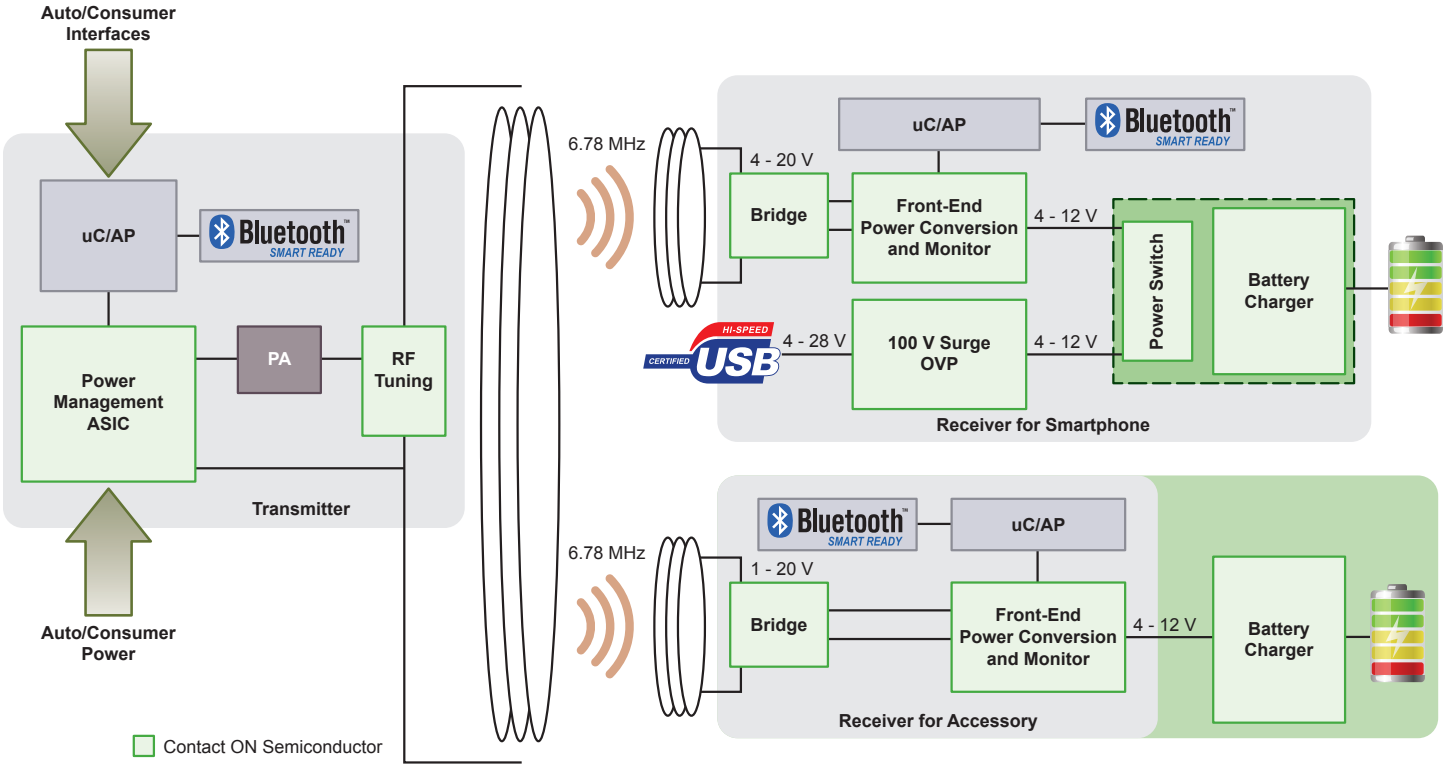

AirFuel Magnetic Resonance System Blocks

Device	V_R (V)	I_F (A)	V_F @ 0.5 A (mV)	V_F @ 1 A (mV)	V_F @ 2 A (mV)	I_R @ 30 V (µA)	Configuration	Package
NSR1030QMU	30	1	415	475	–	6	Bridge	UDFN-4
NSR2030QMU	30	2	400	455	545	7	Bridge	UDFN-4
NSR2030QMX*	30	2	410	455	545	5	Bridge	XDFN-4
NSR2030DMX	30	2	410	455	545	5	Dual	XDFN-4

* Pending 3Q18.

Full Bridge Rectifier for Inductive Wireless Charging

Key Features – NMLU1210

- Full Bridge Rectification block - up of 3.2 A of operation
- Low $R_{DS(ON)}$ minimizes conduction losses
- Low profile UDFN-8 package



Device	MOSFET			SCHOTTKY			Package(s)
	V_{LL} (V)	I_D (A)	$R_{DS(ON)}$ Max @ V_{GS} = 10 V (Ω)	V_R (V)	V_F (A)	I_F (A)	
NMLU1210	20	3.2	0.017	20	0.45	3.2	UDFN-8

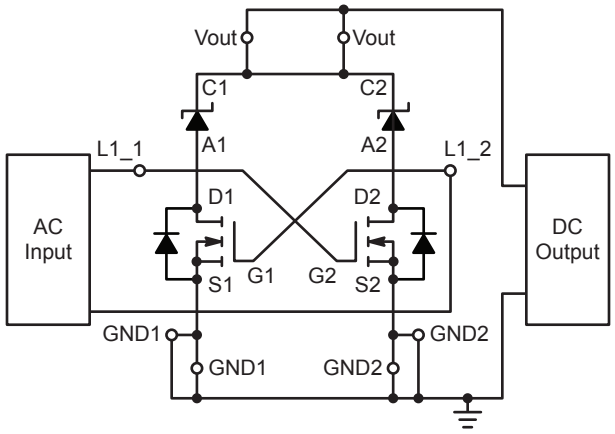

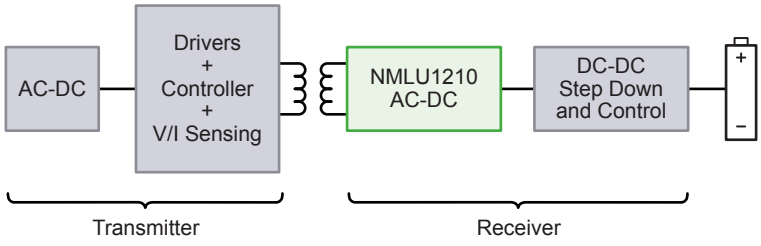

Optimized Schottky Diodes

As wireless devices become smaller and thinner, more compact, energy efficient components are necessary. Power optimized Schottky diodes offer best in class thermal efficiency, and are considerably smaller than equivalent current handling devices. A lower forward voltage - compared to similar devices – also improves energy efficiency.

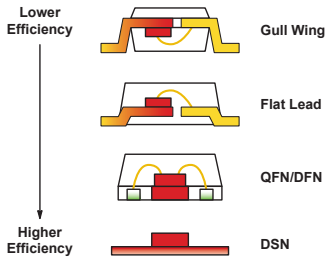

Thermal Efficiency

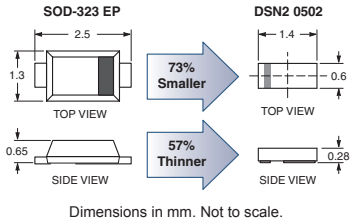

Dimensions in mm. Not to scale.

Package Size

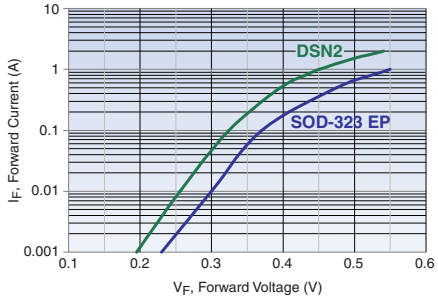

Energy Efficiency

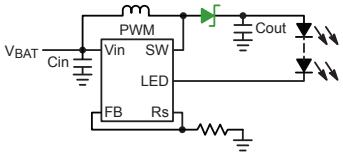

DC-DC Boost Converter for LED Backlighting

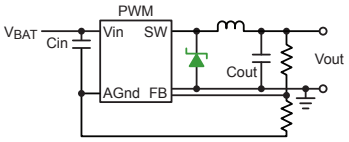

DC-DC Buck Converter

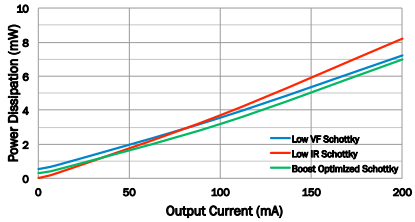

Schottky Diodes in DSN2 Package

Device	I_F (A)	V_R (V)	V_F @ Rated I_F (mV)	I_R @ Rated V_R (µA)	DSN2 Package
NSR01L30NX	0.1	30	460	0.3	0201 DSN
NSR01F30NX	0.1	30	430	2	0201 DSN
NSR02L30NX	0.2	30	530	0.4	0201 DSN
NSR02F30NX	0.2	30	500	2	0201 DSN
NSR05402NX*	0.5	40	570	3	0201 DSN
NSR05F20NX	0.5	20	390	15	0402 DSN
NSR05F30NX	0.5	30	400	20	0402 DSN
NSR05F40NX	0.5	40	420	15	0402 DSN
NSR10404NX	1.0	40	500	10	0402 DSN
NSR15304NX	1.5	30	530	20	0402 DSN
NSR20204NX	2.0	20	540	15	0402 DSN
NSR10F20NX	1.0	20	430	25	0502 DSN
NSR10F30NX	1.0	30	450	30	0502 DSN
NSR10F40NX	1.0	40	430	10	0502 DSN
NSR15405NX	1.5	40	540	20	0502 DSN
NSR20305NX	2.0	30	550	30	0502 DSN
NSR20F30NX	2.0	30	425	40	0603 DSN
NSR15406NX	1.5	40	510	20	0603 DSN
NSR20206NX	2.0	20	450	40	0603 DSN
NSR20306NX	2.0	30	440	40	0603 DSN
NSR20406NX	2.0	40	520	35	0603 DSN

* Pending 3Q18.

Schottky Diodes in X3DFN-2 Package

Device	I_F (A)	V_R (V)	Max V_F @ 10 mA (mV)	Max I_R @ 10 V (µA)	Features
NSR01L30MX	100	30	460	0.2	Low Leakage
NSR01F30MX	100	30	350	5	Low V_F
NSR02F30MX	200	30	290	15	Low V_F

Schottky Diodes in Other Packages

Device	I_F (A)	V_R (V)	V_F @ Rated I_F (mV)	I_R @ Rated V_R (µA)	Package
NSR05T40XV2	0.5	40	530	3	SOD-523
NSR05T30XV2	0.5	30	370	52	SOD-523
NSR0520V2	0.5	20	410	75	SOD-523
NSR0240V2	0.25	40	580	0.5	SOD-523
NSR0340V2	0.25	40	470	1.5	SOD-523
RB520S30	0.20	30	500	0.04	SOD-523
RB521S30	0.20	30	400	20	SOD-523
NSR10T20XV2	1.0	20	415	85	SOD-523
NSR05T40P2	0.5	40	580	2	SOD-923
NSR05T30P2	0.5	30	450	40	SOD-923
NSR0620P2	0.5	20	480	9	SOD-923
NSR0130P2	0.1	30	450	1	SOD-923
NSR0230P2	0.2	30	400	20	SOD-923
NSR0240P2	0.2	40	540	0.8	SOD-923
NSR0340P2	0.2	40	520	4	SOD-923
NSR0170P2	0.07	70	1.1	0.1	SOD-923
NSR10T306MU*	1.0	30	320	250	UDFN-2
NSR05T404MX	0.5	40	560	3	X2DFN-2
NSR05T304MX	0.5	30	410	40	X2DFN-2
SB2003M	2	30	450	70	SOT-363
SS2003M	2	30	350	500	SOT-363
SB3003CH	3	30	470	15	SOT-457
SS3003CH	3	30	370	550	SOT-457

* Pending 3Q18.

Bipolar Transistors and Digital Transistors

Bipolar Transistors

ON Semiconductor offers a wide portfolio of general purpose Bipolar Transistors. Below are the most common micro-packaged BJTs.

Low $V_{CE(sat)}$ BJTs

ON semiconductor is the leader in Low $V_{CE(sat)}$ BJTs with a portfolio that includes devices up to 6 A.

General Purpose Transistors

Device	Technology	$V_{CE(max)}$ (V)	$I_{C(max)}$ (mA)	Package
2SC5658M3	NPN	50	100	SOT-723
BC846BM3	NPN	65	100	SOT-723
2SA2029M3	PNP	50	100	SOT-723
BC856BM3	PNP	65	100	SOT-723
NST3904DP6	Dual NPN	40	200	SOT-963
NST3906DP6	Dual PNP	40	200	SOT-963
NST3946DP6	Comp NPN/PNP	40	200	SOT-963
NST847BDP6	Dual NPN	45	100	SOT-963
NST857BDP6	Dual PNP	45	100	SOT-963
NST847BPDP6	Comp NPN/PNP	45	100	SOT-963
NST3904F3	NPN	40	200	SOT-1123
NST3906F3	PNP	40	200	SOT-1123
NST847BF3	NPN	45	100	SOT-1123
NST857BF3	PNP	45	100	SOT-1123

Low $V_{CE(sat)}$ BJTs

Device	Polarity	V_{CE} (V)	I_C DC (A)	$V_{CE(sat)}$ 1 A, Beta 10, Typ (mV)	H_{fa} @ 5 V, 100 mA, Typ	Package
NSS12100M3	PNP	12	1	280	250	SOT-723
NSS12100XV6	PNP	12	1	280	250	SOT-563
NSS12500UW3	PNP	12	5	55	250	WDFN-3
NSS12501UW3	NPN	12	5	31	300	WDFN-3
NSS12601CF8	NPN	12	6	30	300	ChipFET
NSS20101J	NPN	20	1	220	500	SC-89
NSS20500UW3	PNP	20	5	60	250	WDFN-3
NSS20501UW3	NPN	20	5	31	300	WDFN-3
NSS20601CF8	NPN	20	6	31	300	ChipFET
NSS35200CF8	PNP	35	2	79	253	ChipFET
NSS40200UW6	PNP	40	2	100	250	WDFN-6
NSS40500UW3	PNP	40	5	65	250	WDFN-3
NSS40501UW3	NPN	40	5	38	300	WDFN-3
NSS40600CF8	PNP	40	6	50	250	ChipFET
NSS40601CF8	NPN	40	6	31	300	ChipFET

Digital Transistors

As space becomes more constrained in wireless devices, integration becomes more desirable. Incorporating bias resistors into bipolar transistors performs this integration without degrading the performance of the transistor.

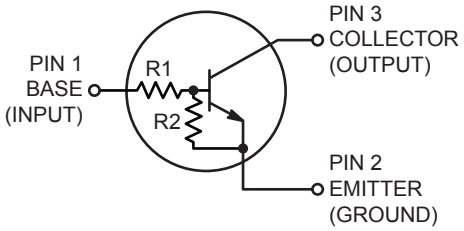

Digital Transistors

Part Body Number	R1 (Ω)	R2 (Ω)	Package(s)
113E	1K	1K	SOT-723, SOT-1123
114E	10K	10K	SOT-723, SOT-963, SOT-1123
114T	10K	None	SOT-723, SOT-963, SOT-1123
114Y	10K	47K	SOT-723, SOT-963, SOT-1123
115E	100K	100K	SOT-723
115T	100K	None	SOT-723, SOT-963, SOT-1123
123E	2.2K	2.2K	SOT-723, SOT-1123
123J	2.2K	47K	SOT-723, SOT-963, SOT-1123
123T	2.2K	None	SOT-723, SOT-963, SOT-1123
124E	22K	22K	SOT-723, SOT-963, SOT-1123
124X	22K	47K	SOT-723, SOT-1123
143E	4.7K	4.7K	SOT-723, SOT-963, SOT-1123
143T	4.7K	None	SOT-723, SOT-1123
143Z	4.7K	47K	SOT-723, SOT-963, SOT-1123
144E	47K	47K	SOT-723, SOT-963, SOT-1123
144T	47K	None	SOT-723, SOT-1123
144W	47K	22K	SOT-723, SOT-963, SOT-1123

Power Distribution Load Switches

Key Features

- Optimized for power sequence control and low power consumption by reducing current leakages
- Slew rate control to reduce inrush current
- Low RON as low as 11 mΩ
- Simplified layout reduces PCB footprint
- WLCSP and DFN packages, as small as 0.76 mm x 0.76 mm

ecoSWITCH™
ADVANCED LOAD MANAGEMENT

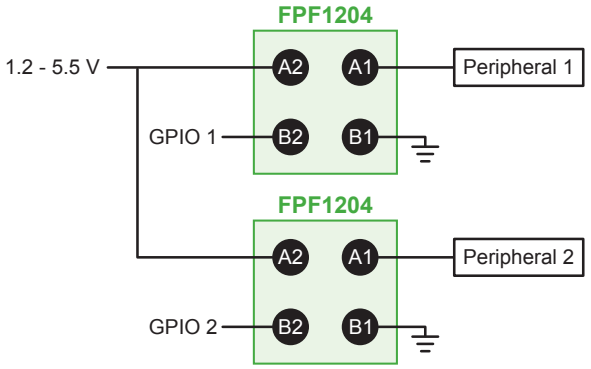

Load Switches

Device	Channel	V_{IN} Min (V)	V_{IN} Max (V)	$R_{DS(ON)}$ (mΩ)	I_{OUT} Max (A)	Discharge Path	RCB*	Package
NCP432	Single	1	3.6	50 @ 1.8 V	1.5	No	No	WLCSP-4
NCP433	Single	1	3.6	50 @ 1.8 V	1.5	Yes	No	WLCSP-4
NCP434	Single	1	3.6	29 @ 3.3 V	2	No	No	WLCSP-4
NCP435	Single	1	3.6	29 @ 3.3 V	2	Yes	No	WLCSP-4
FPF1203	Single	1.2	5.5	55 @ 3.3 V	2.2	No	No	WLCSP-4
FPF1204	Single	1.2	5.5	55 @ 3.3 V	2.2	Yes	No	WLCSP-4
NCP451	Single	0.75	5.5	12 @ 3.6 V	3	No	No	WLCSP-6
NCP451A	Single	0.75	5.5	12 @ 3.6 V	3	Yes	No	WLCSP-6
FPF1048	Single	1.5	5.5	23 @ 4.5 V	3	No	Yes	WLCSP-6
NCP340	Single	1.8	5.5	26 @ 3.0 V	3	No	Yes	UDFN-4
FPF1038	Single	1.2	5.5	21 @ 4.5 V	3.5	No	No	WLCSP-6
FPF1039	Single	1.2	5.5	21 @ 4.5 V	3.5	Yes	No	WLCSP-6
NCP458R	Single	0.75	5.5	11 @ 3.3 V	4	No	Yes	WLCSP-8
NCP459	Single	0.75	5.5	11 @ 3.3 V	4	Yes	No	WLCSP-8
FPF2411	Single	2.3	5.5	12 @ 3.8 V	6	No	Yes	WLCSP-12
FPF1320	DISO**	1.5	5.5	50 @ 3.3 V	1.5	No	Yes	WLCSP-6
FPF1321	DISO**	1.5	5.5	50 @ 3.3 V	1.5	Yes	Yes	WLCSP-6

* Reverse Current Block. ** Dual Input Single Output.

ecoSWITCH™ Integrated Load Switch

Device	r_{on} (mΩ)	I Max (A)	V_I Min (V)	V_I Max (V)	I_Q (µA)	Discharge	Slew Rate (µs)	Features	Package(s)
NCP45524	18.0	6	0.5	13.5	-	Adj	-	Power good	DFN-8
NCP45525	18.0	6	0.5	13.5	-	Adj	Adj	-	DFN-8
NCP45560	2.4	24	0.5	13.5	-	Adj	Adj	Power good; Fault	DFN-12
NCP45540	3.3	20	0.5	13.5	-	Adj	Adj	Power good; Fault	DFN-12
NCP45541	3.3	20	0.5	13.5	-	Adj	Adj	Power good	DFN-12
NCP45520	9.5	10.5	0.5	13.5	-	Adj	-	Power good; Fault	DFN-8
NCP45521	9.5	10.5	0.5	13.5	-	Adj	Adj	Fault	DFN-8

Simple Load Switches

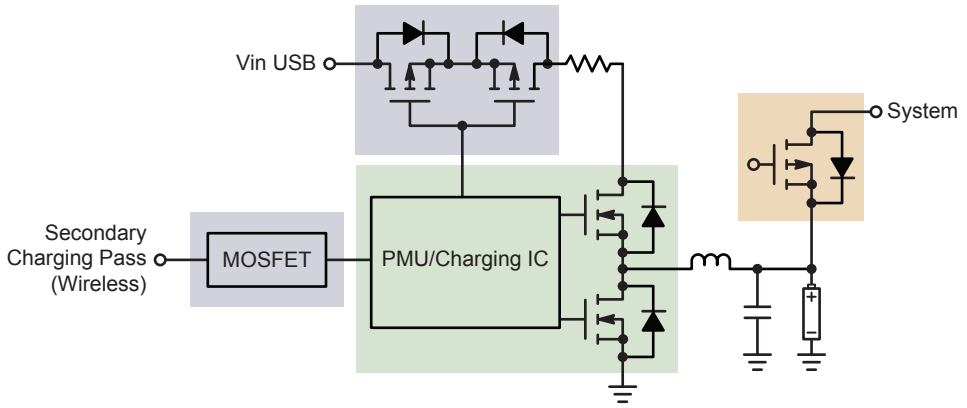

Switching Charger – Step Down

Device	Polarity	Configuration	$V_{(BR)DSS}$ Min (V)	V_{GS} Max (V)	I_D Max (A)	$R_{DS(ON)}$ Max @ V_{GS} = 4.5 V (Ω)	Package(s)
ECH8420	N-Channel	Single	20	±12	14	0.0068	ECH-8
MCH6421	N-Channel	Single	20	±12	5.5	0.038	MCPH-6
MCH6437	N-Channel	Single	20	±12	7	0.024	MCPH-6
MCH6448	N-Channel	Single	20	±9	8	0.022	MCPH-6
MCH6662	N-Channel	Dual	20	±10	2	0.16	MCPH-6
EMH2418R	N-Channel	Dual	24	±12	8.5	0.0169	EMH-8
MCH6431	N-Channel	Single	30	±20	5	0.091	MCPH-6
NTLJD4116N	N-Channel	Dual	30	±12	3.7	0.07	WDFN-6
NTLJS4114N	N-Channel	Single	30	±12	6	0.035	WDFN-6
NTLUS4930N	N-Channel	Single	30	±20	6.3	0.033	UDFN-6
NTLUS4C12N	N-Channel	Single	30	±20	9.1	0.015	UDFN-6
MCH3486	N-Channel	Single	60	±20	2	0.192	MCPH-3
MCH3333A	P-Channel	Single	-30	±10	2	0.215	MCPH-3
MCH6337	P-Channel	Single	-20	±10	4.5	0.049	MCPH-6
NTLJS3A18PZ	P-Channel	Single	-20	±8	8.2	0.018	WDFN-6
NTLUD3A260PZ	P-Channel	Dual	-20	±8	1.7	0.2	UDFN-6
NTLUD3A50PZ	P-Channel	Dual	-20	±8	4.5	0.048	UDFN-6
NTLUS3A18PZ	P-Channel	Single	-20	±8	8.2	0.018	UDFN-6
NTLUS3A39PZ	P-Channel	Single	-20	±8	5.2	0.039	UDFN-6
NTTFS3A08PZ	P-Channel	Single	-20	±8	15	0.067	µ8FL
ECH8308	P-Channel	Single	-12	±10	10	0.013	ECH-8
EMH2314	P-Channel	Dual	-12	±10	6	0.037	EMH-8
MCH6320	P-Channel	Single	-12	±10	3.5	0.07	MCPH-6
MCH6336	P-Channel	Single	-12	±10	5	0.043	MCPH-6
MCH6353	P-Channel	Single	-12	±10	5.5	0.035	MCPH-6
NTLUS3C18PZ	P-Channel	Single	-12	±8	7	0.024	UDFN-6

Depletion Mode Isolation Switches

Key Performance Characteristics

- Passes ground and full swing audio signals with no power applied
- Excellent isolation when power is applied, OIRR = -75 dB
- Low power consumption when isolating, I_{CC} = 80 µA typical
- Low impedance ground path without power applied
- Independent switch select lines enable system flexibility
- Small chip scale package ideal for portable products and accessories

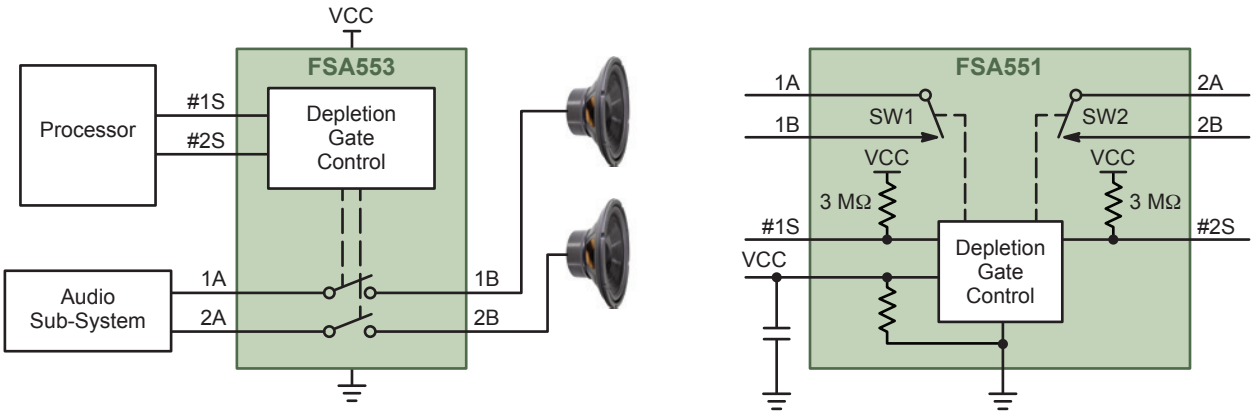

Depletion Mode Isolation Switches

Device	Description	R_{ON} Typ (Ω)	THD+N Typ	Isolating V_{CC} Range (V)	Conducting V_{SW} Max (V)	Isolating V_{SW} Max (V)	Package
FSA550	4-Channel Depletion Isolation Switch	0.8	-114 dB	1.6 - 3.0	±2	0 - 1.4	WLCSP-12
FSA551	2-Channel Depletion Isolation Switch	0.4	-106 dB	1.5 - 3.0	-3.3	-3.3	WLCSP-9
FSA553	2-Channel Depletion Isolation Switch	0.4	-107 dB	1.5 - 3.0	±1.5	±1.5	WLCSP-9

Protection Solutions

External Interface

USB3.1
USB3.0

USB2.0

Camera/Display Lines

#Pairs ?
Data Rate?

High Speed Differential Data

ESD Protection

- < 0.3 pF, industry leading insertion loss
- Low clamping voltage
- Unidirectional and Bidirectional
- Singles and space efficient arrays
- Smallest footprint in the industry

EMI Filter

- > 30 dB CM Attenuation
- Support for up to 8 Gbps
- Lowest clamping voltage in its class
- 1, 2, 3 pairs available

Single Ended Data

SDR50
SDR104

SIM

Audio

Speaker

Headphone

Microphone

Other Lines

General Purpose
ESD Protection

Low Speed Single Ended Data/Audio

ESD Protection

- Industry leading power density
- > 10 A Surge capable in 0201 form factor
- Smallest footprint in the industry
- Singles and arrays

EMI Filter

- > 40 dB Attenuation at antenna frequency
- Low clamping voltage
- Extremely low cross-talk
- Small form factor

Charging

USB Vbus
Battery Contacts

High Surge Protection

- Ipp > 180 A (8x20 µs)
- Superior clamping performance
- 4.8 V to 18 V V_{RWM} options
- Unidirectional and Bidirectional

PROTECTION

Common Mode Filters for High Speed Interfaces

Function	Filter CM Noise		Signal Integrity		Protect Chipset	
Device Series	Attenuation > 25 dB range	RF Receivers	Maximum Data Rate	Interfaces Supported	Vc @ 8 kV (TLP)	Minimum Chipset Geometry
EMI813x	700 MHz – 1.1 GHz	LTE, GSM,	4 Gb/s	USB2.0; MHL1-2; HDMI1.3/4; MIPI CSI-2	11.6 V	14 nm
EMI814x	1.3 GHz – 3 .0 GHz	LTE, WCDMA, WiFi, GPS	8 Gb/s	USB3.0; MIPI CSI-3; MHL3.0; HDMI2.0	11.6 V	14 nm

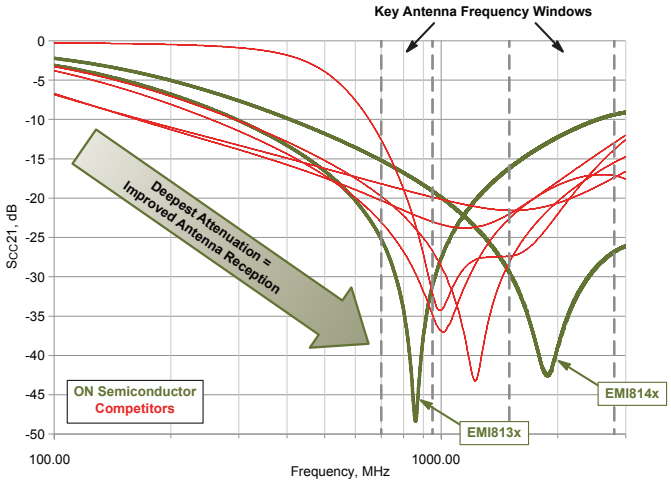

Audio Filtering for HiFi

EMI7112 Features

- >40 dB @ 750 MHz to 2.4 GHz
- Cross-talk < –65 dB, THD+N < 0.006%
- HiFi quality capable

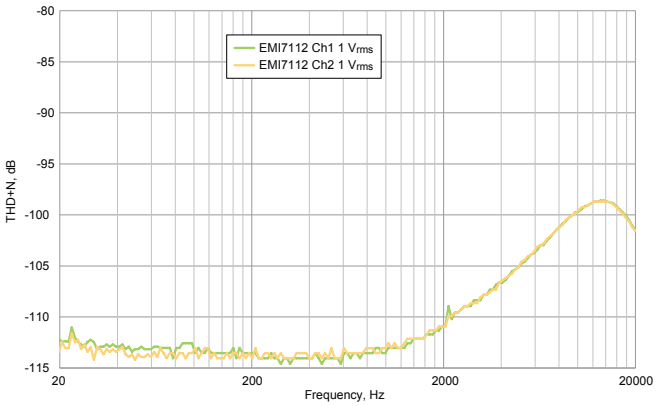

EMI7112 THD + N

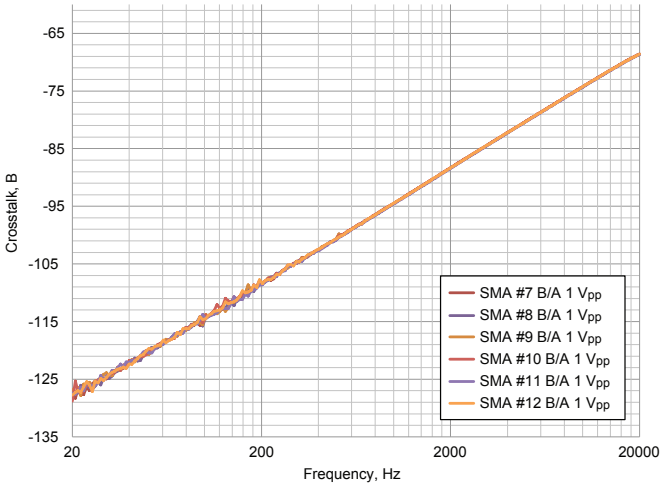

EMI7112 Crosstalk with 1 V_{pp} Input Voltage

ESD Protection for High Speed Data Lines

Industry leading insertion loss with excellent clamping performance

Applications

- USB 2.0/3.x
- Thunderbolt 2.0/3.0
- HDMI 1.4/2.0
- MHL 3/superMHL
- MIPI D/M/C PHYs
- NFC & Wi-Fi Antenna Protection

Device	Polarity	V_{RWM} (V)	8 x 20 µs Surge		Capacitance (pF)	Capacitance Max (pF)	No of Lines	Package
			I_{PP} Min (A)	V_{Clamp} @ I_{PP} (V)				
ESD8011	Bidirectional	5.5	3.6	8.7	0.1	0.2	1	X3DFN
ESD8451	Bidirectional	3.3	3.7	9.2	0.2	0.3	1	X3DFN
ESD8351	Unidirectional	3.3	5	8.2	0.37	0.55	1	X3DFN
ESD8111P	Bidirectional	3.3	7.1	8	0.2	0.4	1	XDFN
ESD7331	Bidirectional	3.3	2.5	7.5	0.4	0.75	1	X3DFN
ESD7501	Bidirectional	5	2	9.9	0.45	0.75	1	X3DFN
ESD9L5.0	Unidirectional	5	1	9	0.5	0.9	1	SOD-923
ESD9L3.3	Unidirectional	3.3	1	9.8	0.5	0.9	1	SOD-923
ESDL3552*	Bidirectional	5	2	14	0.25	0.3	2	X4DFN-3
ESD8704	Unidirectional	3.3	7.5	6.7	0.37	0.5	4	UDFN-10
ESD8104	Unidirectional	3.3	3.5	8.1	0.3	0.37	4	UDFN-10
ESD8116	Unidirectional	3.3	3.5	8	0.3	0.35	6	UDFN-8
ESD8118	Unidirectional	3.3	3.5	8.1	0.3	0.35	8	UDFN-10
ESD8008	Unidirectional	3.3	5	5	0.3	0.35	8	UDFN-14
ESD7181	Bidirectional	18.5	1	32	0.3	0.5	1	X3DFN
ESD7241	Bidirectional	24	2.5	37	0.55	1	1	X2DFN-2
ESDL2011P	Bidirectional	1	4.3	4.6	0.15	0.2	1	XDFN
ESDL2031P*	Bidirectional	4	8	5.5	0.37	0.55	1	XDFN
ESDL1531*	Bidirectional	3.3	7.5	8.6	0.15	0.3	1	X4DFN

* Pending 3Q18.

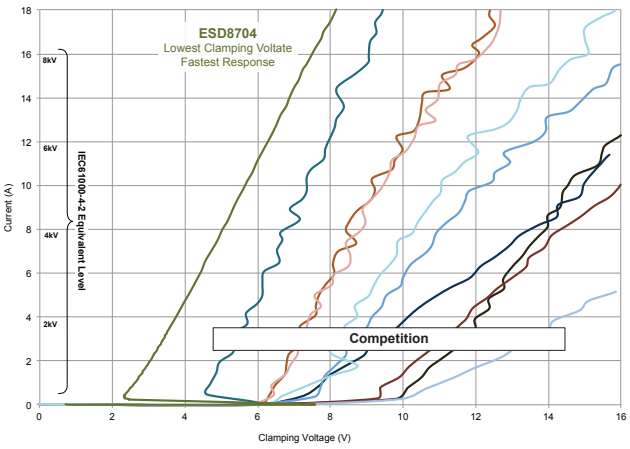

SCR Arrays – 100 ns TLP

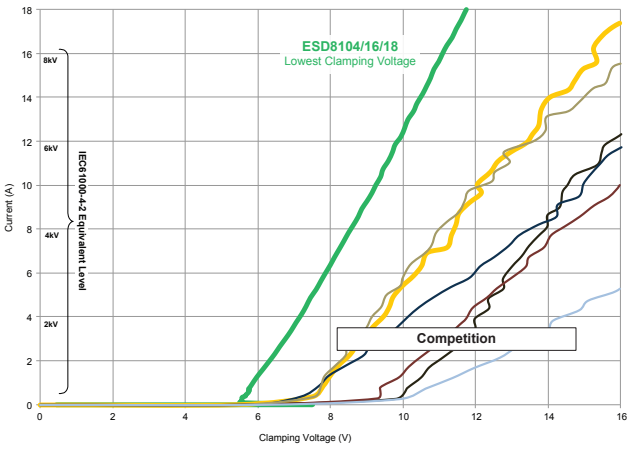

LVPT Arrays – 100 ns TLP

PROTECTION

ESD Protection Featuring X4DFN – Smallest Package in the Industry

Ideal ESD protection solutions for space constrained applications

Industry leading x4DFN package offers

- Six side silicon encapsulation
- Best ESD protection performance in its class
- Increased reliability
  - Protective mechanical layer ➜ no chipping
  - Electrical insulation prevents short circuit conditions
  - Moisture barrier ➜ no corrosion
  - Lower reflectivity ➜ friendly to automated inspection
  - Light barrier ➜ reduces leakage caused by light sensitivity

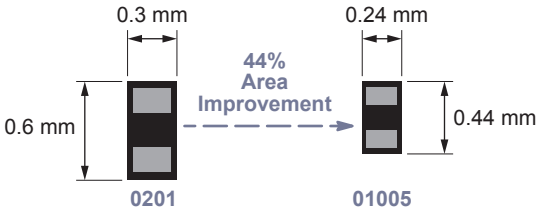



Device	ESD Contact/Air (kV)	V_{RWM} (V)	C_j Typ (pF)	C_j Max (pF)	8 x 20 µs Surge				R_{DYN} TLP (Ω)	SCR
					I_{PP} Typ (A)	V_{Clamp} Typ (V)	I_{PP} Min (A)	V_{Clamp} Max (V)		
ESDL1531*	25/25	3.3	0.15	0.3	7.5	8.6	6.5	11.5	0.46	Yes
ESDM1131	16/16	3.3	4	5.5	4.25	6.2	3.5	6.6	0.125	No
ESDM1031*	30/30	3.3	36	40	13.5	9.6	9.5	10.5	0.21	No
ESDM1032*	30/30	3.3	21	23.5	12.5	8.4	11	10	0.11	No
ESDM1051*	30/30	5.5	21	23.5	12	8.5	11	10	0.11	No
ESDM1121*	15/15	12	15	20	4	19.5	3	22	0.59	No

* Pending 3Q18.

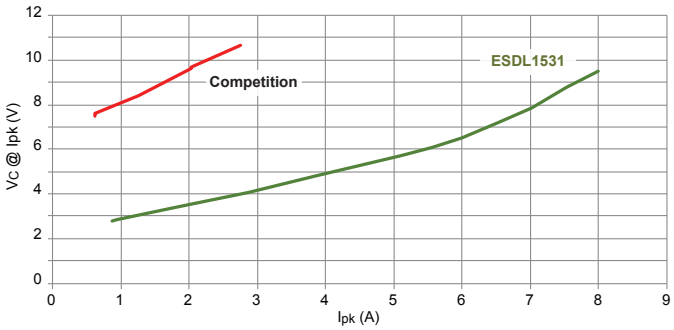

High Speed Data Protection – 8 x 20 µs Surge Comparison

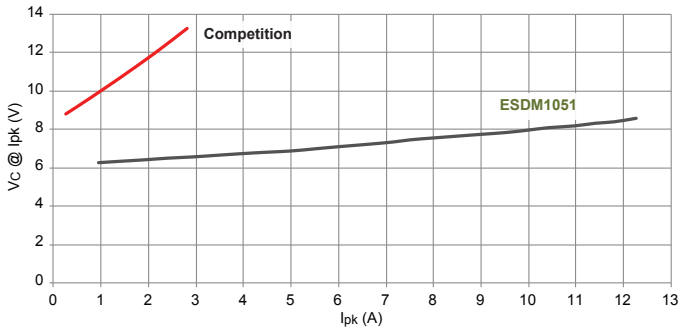

5 V GPIO Protection – 8 x 20 µs Surge Comparison

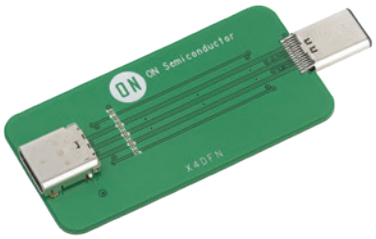

X4DFN USB Type-C Evaluation Board

ESD Protection for GPIO

Small form factor solutions with lowest clamping voltage in class

Applications

- SIM Card protection
- SD Card protection
- Biometrics/finger print sensor
- Audio In/Out
- USB Type C configuration channel
- Manufacturing test points



Device	Polarity	V_{RWM} (V)	8 x 20 µs Surge		Capacitance Max (pF)	No of Lines	Package
			I_{PP} Min (A)	V_{Clamp} @ I_{PP} (V)			
ESDM3031	Bidirectional	3.3	11	8.4	20	1	X3DFN-2
ESDM3051	Bidirectional	5	10	8.7	21	1	X3DFN-2
ESDM3551	Bidirectional	5.5	9.9	8.8	21	1	X3DFN-2
ESD5371	Bidirectional	3.3	6	10.1	10	1	X3DFN-2
ESD5581	Bidirectional	5	6	10.3	10	1	X3DFN-2
ESD5111P	Bidirectional	3.3	4	5.8	5.5	1	DSN-2
ESDM1131	Bidirectional	3.3	3.9	5.7	5	1	X4DFN-2
ESD5102	Bidirectional	3.3	–	–	5.5	2	DSN-3
ESD5004	Bidirectional	3.3	3	6.8	5	4	X3DFN-4
ESDM1031*	Bidirectional	3.3	9.5	10.5	40	1	X4DFN-2
ESDM1032*	Bidirectional	3.3	11	10	23.5	1	X4DFN-2
ESDM1051*	Bidirectional	5.5	11	10	23.5	1	X4DFN-2
ESDM1121*	Bidirectional	12	3	19.5	20	1	X4DFN-2

* Pending 3Q18.

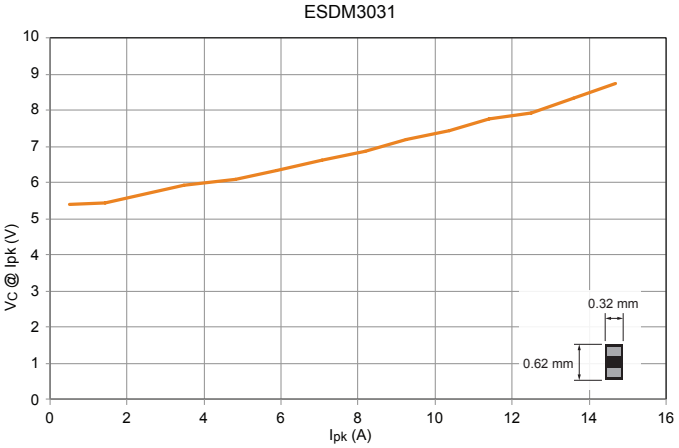

8 x 20 µs Surge Performance

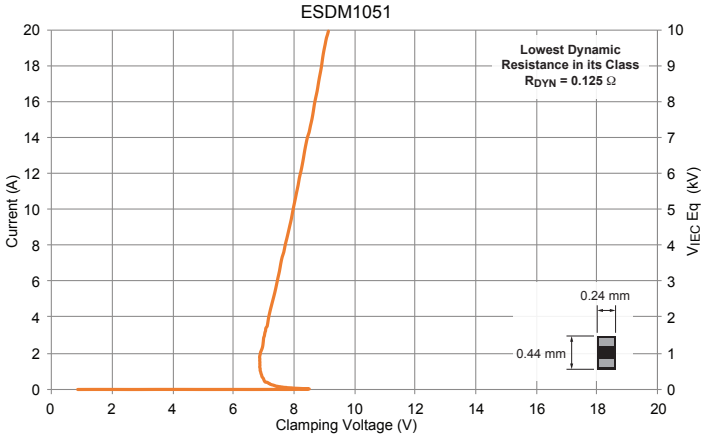

100 ns TLP I-V Curve

PROTECTION

Surge Protection

High performance, space efficient solutions

Applications

- V_{BUS} line
- Battery line
- Audio In/Out
- USB Type C Configuration Channel
- LCD power line
- RF Power Amplifier power line



Device	Polarity	V_{RWM} (V)	8 x 20 µs Surge		Package
			I_{PP} Min (A)	V_{Clamp} @ I_{PP} (V)	
NSPM1041	Bidirectional	4.8	125	9.25	UDFN-2
NSPM2051	Unidirectional	5	100	8.8	UDFN-2
NSPM0061	Unidirectional	6.3	70	11.3	UDFN-2
NSPM0101	Unidirectional	10	60	18.2	UDFN-2
NSPM5131	Unidirectional	13.5	160	26.5	UDFN-6
NSPM8151	Unidirectional	15	100	24.5	UDFN-6
NSPM8181	Unidirectional	18	119	31.5	UDFN-6
NSPU3051	Unidirectional	5.5	36	7.5	SOD-882
NSPU3061	Unidirectional	6.3	30	7.3	SOD-882
NSPM3031	Bidirectional	3.3	45	7	SOD-882
NSPM3042	Bidirectional	4.8	43	7.4	SOD-882
NSPU5132	Unidirectional	13.5	200	22	UDFN-6
NSPU5021	Unidirectional	20	140	32	UDFN-6
NSPU5221	Unidirectional	22	120	34	UDFN-6
NSPM2052	Unidirectional	5	120	8	UDFN-2
NSPM1042*	Bidirectional	4.8	180	8.5	UDFN-2

* Pending 3Q18.

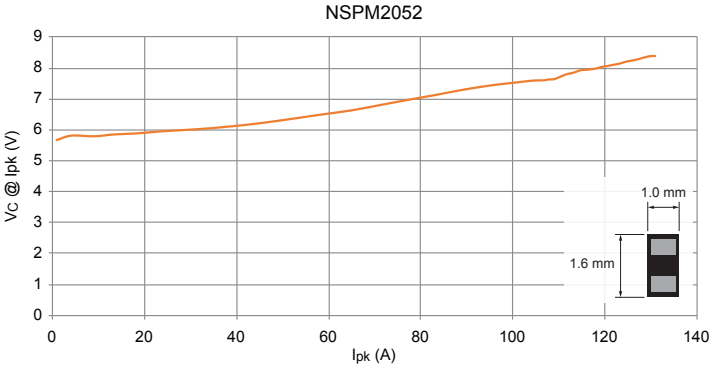

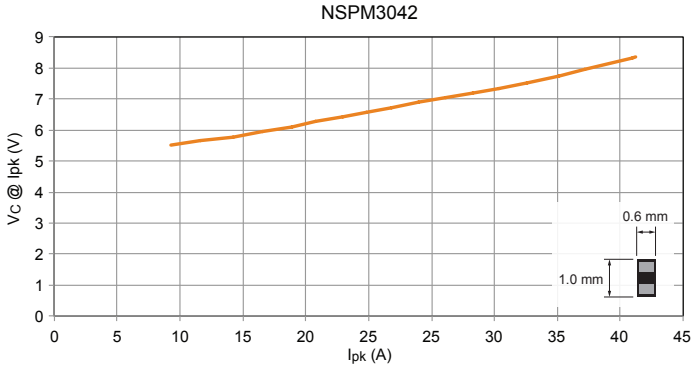

8 x 20 µs Surge Performance – V_{BAT} Protection

Power Protection

Surge and Over-Voltage Protection Switches

Key Features

- Optimized for Input Power Stage with USB-C
- 100 V Surge Capable Integrated TVS
- Low RON for Low Power Loss
- Fast Over Voltage Response Time
- Design Flexibility with Adjustable/Selectable OVP
- Reverse Current Block
- Compact Packages, WLCSP and DFN

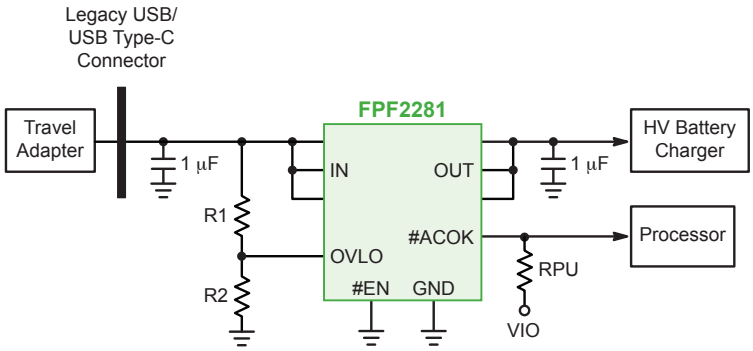

Over Voltage Protection Switches

Device	Channel	V_{IN} Min (V)	V_{IN} Max (V)	OVP (V)	R_{ON} (mΩ)	I_{OUT} Max (A)	Integrated TVS	Discharge Path	Package
FPF2280	Single	2.5	28	6.8*	30 @ 5.0 V	4.5	Yes	No	WLCSP-12
FPF2281	Single	2.5	28	14*	30 @ 5.0 V	4.5	Yes	No	WLCSP-12
FPF2290	Single	2.5	28	SEL**	30 @ 5.0 V	4.5	Yes	No	WLCSP-12
FPF2498	Single	3.5	28	6.5	80 @ 5.0 V	1.75	No	No	WLCSP-6
NCP398	Single	2.9	28	5.65	190 @ 5.0 V	0.8	No	Yes	WLCSP-4
FPF3488	SIDO***	2.7	28	13.9	28 @ 5.0 V	3.5	Yes	No	WLCSP-28
FPF3042	DISO^	4	18	14	70 @ 5.0 V	2.7	No	No	WLCSP-16
FPF3695	Single	1.2	28	OPN^^	50 @ 3.5 V	3.4	No	No	WLCSP-40
NCP367	Single	1.2	28	OPN^^	50 @ 3.5 V	3.4	No	No	DFN-8

* Default but Adjustable w/ external R. ** Selectable w/ Logic Pins. *** Single Input Dual Output. ^ Dual Input Single Output. ^^ By Option.

Over Current Protection Switches

Key Features

- Optimized for 5V USB-OTG and VCONN with USB-C
- Fast Over Current Response Time
- Design Flexibility with Adjustable Current Limit Set
- True Reverse Current Block
- Compact Packages, WLCSP and DFN
- UL Certified

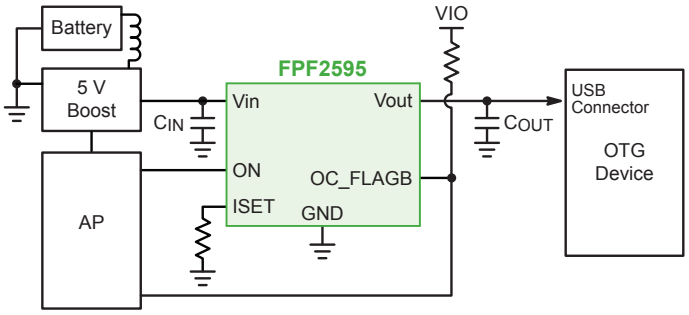

Over Current Protection Switches

Device	Channel	V_{IN} Min (V)	V_{IN} Max (V)	R_{ON} (mΩ)	I_{LIM} Range (A)	OVP	RCB*	Package
FPF2195	Single	1.8	5.5	55 @ 3.3 V	0.1 ~ 1.5	No	Yes	WLCSP-6
FPF2495	Single	2.5	5.5	70 @ 5.0 V	0.05 ~ 2.0	Yes	Yes	WLCSP-9
FPF2496	Single	3.5	5.5	70 @ 5.0 V	0.1 ~ 2.5	Yes	Yes	WLCSP-9
FPF2595	Single	2.5	5.5	35 @ 5.0 V	0.1 ~ 3.5	Yes	Yes	WLCSP-12
FPF2895C	Single	4	22	27 @ 5.0 V	0.5 ~ 5.0	Yes	Yes	WLCSP-24
NCP380	Single	2.5	5.5	55 @ 5.0 V	0.5 ~ 2.1	No	Yes	UDFN-6
NCP382	SIDO**	2.5	5.5	80 @ 5.0 V	Fixed***	No	Yes	DFN-8
NCP383	SIDO**	2.7	5.5	45 @ 5.0 V	0.5 ~ 2.8	No	Yes	UDFN-10

* Reverse Current Block. ** Single Input Dual Output. *** By Option.

EEPROMs for Configuration and Calibration

Features

- Broad density range: 1 kb to 2 Mb
- Wide operating Vcc range: 1.7 V to 5.5 V
- High endurance: 1 million program/erase cycles
- Wide temperature range: industrial and extended

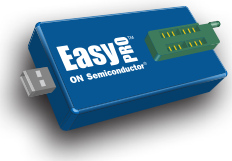

EasyPRO™ is a user-friendly, portable programming tool for ON Semiconductor serial EEPROMs (I2C, SPI, Microwire)

EEPROMs

Data Transmission Standard	Density	Organization*	Vcc Min (V)	Vcc Max (V)	fCLK Max (MHz)	Package(s)
I2C	1 Mb	128k x 8	1.7, 1.8	5.5	0.4, 1	US8, SOIC-8, TSSOP-8, UDFN-8, TSOT23-5, WLCSP-4, WLCSP-5, WLCSP-8
	512 kb	64k x 8				
	256 kb	32k x 8				
	128 kb	16k x 8				
	64 kb	8k x 8				
	32 kb	4k x 8				
	16 kb	2k x 8				
	8 kb	1k x 8				
	4 kb	512 x 8				
	2 kb	256 x 8				
SPI	2 Mb	256k x 8	1.7, 1.8	5.5	10, 20	SOIC-8, TSSOP-8, UDFN-8
	1 Mb	128k x 8				
	512 kb	64k x 8				
	256 kb	32k x 8				
	128 kb	16k x 8				
	64 kb	8k x 8				
	32 kb	4k x 8				
	16 kb	2k x 8				
	8 kb	1k x 8				
	4 kb	512 x 8				
	2 kb	256 x 8				
	1 kb	128 x 8				
Microwire	16 kb	2k x 8 / 1k x 16	1.65, 1.8	5.5	2, 3, 4	SOIC-8, TSSOP-8, UDFN-8
	16 kb	2k x 8 / 1k x 16				
	8 kb	1k x 8 / 512 x 16				
	8 kb	1k x 8 / 512 x 16				
	4 kb	512 x 8 / 256 x 16				
	2 kb	256 x 8 / 128 x 16				
	1 kb	128 x 8 / 64 x 16				
	1 kb	128 x 8 / 64 x 16				

* Organization for Microwire devices is selectable.

RF/NFC EEPROM

Features

- RF/NFC interface for contactless transmission of data up to 150 cm
- ISO 15693 / ISO 18000-3 Mode 1 Compliant NFC/RF at 13.56 MHz
- 2,000,000 Program / Erase Cycles
- 200 year data retention
- 64-bit Unique Identifier (UID)
- Multiple 32-bit passwords and Lock Feature
- I2C Interface
  - 4 selectable slave addresses using pins A0 ad A1
  - 1 MHz bus speeds

PIN CONFIGURATION

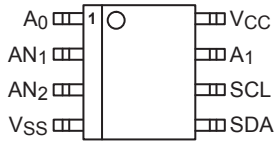

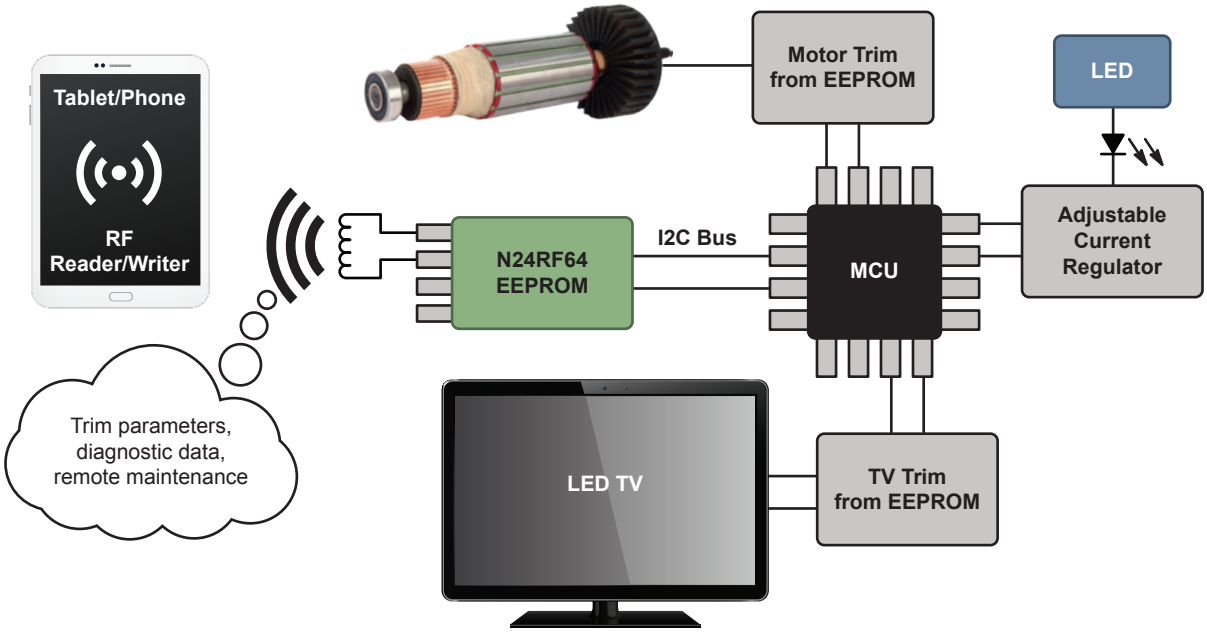

Sample Application

Device	Type	Vcc Max (V)	Memory Density (kb)	Temperature Range	Package(s)
N24RF04*	RF EEPROM	5.5	4	-40 to +105°C	SOIC-8, TSSOP-8
N24RF16*	RF EEPROM	5.5	16	-40 to +105°C	SOIC-8, TSSOP-8
N24RF64*	RF EEPROM	5.5	64	-40 to +105°C	SOIC-8, TSSOP-8

* Pending 2Q18.

Serial NOR Flash Memory

Features

- SPI interface
- Supply voltage 1.65 to 1.95 V
- Minimum erase size (4 KB/64 KB)
- Fast write perfomance (Sector Erase/Page Program)
- Low standby current; support for deep standby mode

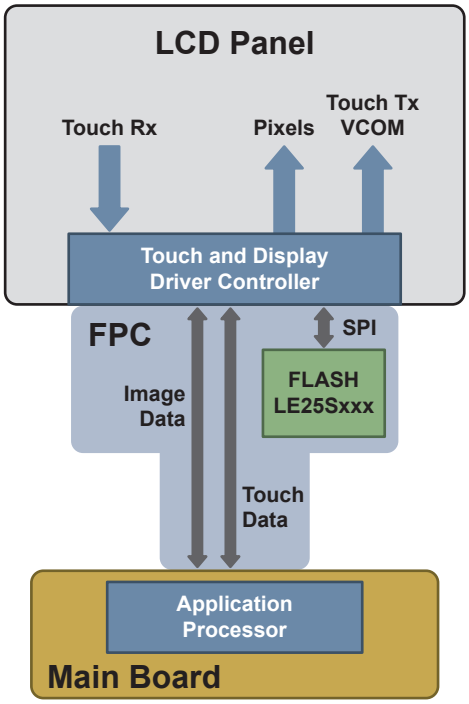

LCD Module Diagram

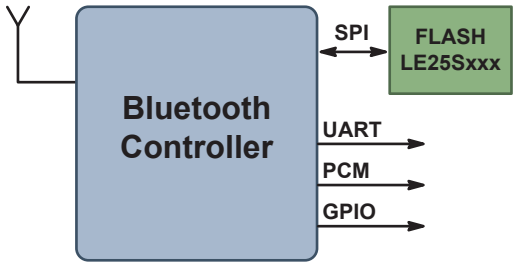

Bluetooth Block Diagram

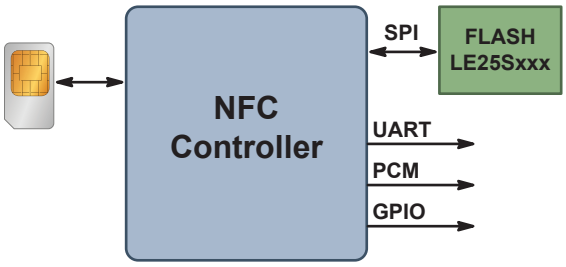

NFC Block Diagram

Device	Density	Power Supply (V)	Erase Size	Sector Erase Time (ms)	Page Program Time (ms)	Read/Write/Standby Current, Typ (mA)	Package
LE25S20	2 Mb	1.65 - 1.95	4 KB/64 KB/2 Mb	80	3.0	6.0/15.0/0.010	WLCSP-8
LE25S81	8 Mb	1.65 - 1.95	4 KB/64 KB/8 Mb	80	0.3	6.0/18.0/0.010	WLCSP-8
LE25S161	16 Mb	1.65 - 1.95	4 KB/64 KB/16 Mb	15	0.4	6.0/6.5/0.009	UDFN-8, WLCSP-8

Standard Logic and MiniGate™

Available logic functions

- Logic Gates, Buffers, Flip-Flops
- Arithmetic Functions
- Bus Transceivers
- Latches and Registers
- Multiplexers and Analog Switches
- Logic Level Translators

Standard Logic Family	Device Prefix	V_{CC} Min (V)	V_{CC} Max (V)	t_{PD} (nS)	I_{OUT} (mA)	Input Logic Level	Packages
Metal Gate	MC14	3	18	50 @ V_{CC} = 15 V	±4.2 @ V_{CC} = 15 V	CMOS	SOIC, TSSOP, QFN
AC	MC74AC/74AC	2	6	6 @ V_{CC} = 5 V	±24 @ V_{CC} = 4.5 V	CMOS	
ACT	MC74ACT/74ACT	4.5	5.5	5.5 @ V_{CC} = 5 V	±24 @ V_{CC} = 4.5 V	TTL	
HC	MC74HC/MM74HC	2	6	13 @ V_{CC} = 6 V	±5.2 @ V_{CC} = 6 V (Std) ±7.8 @ V_{CC} = 6 V (Bus Driver)	CMOS	
HCT	MC74HCT/MM74HCT	4.5	5.5	15 @ V_{CC} = 5 V	±4.0 @ V_{CC} = 4.5 V (Std) ±6.0 @ V_{CC} = 4.5 V (Bus Driver)	TTL	
LCX	MC74LCX/74LCX	2.3	3.6	5.5 @ V_{CC} = 3 V	±24 @ V_{CC} = 3 V	LVTTL	
LVX	MC74LVX/74LVX	2	3.6	6.6 @ V_{CC} = 3 V	±4 @ V_{CC} = 3 V	LVTTL	
VCX	MC74VCX/74VCX	1.65	3.6	3.5 @ V_{CC} = 3 V	±24 @ V_{CC} = 3 V	LVTTL	
VHC	MC74VHC/74VHC	2	5.5	5.2 @ V_{CC} = 4.5 V	±8 @ V_{CC} = 4.5 V	CMOS	
VHCT	MC74VHCT/74VHCT	4.5	5.5	3.6 @ V_{CC} = 4.5 V	±8 @ V_{CC} = 4.5 V	TTL	
LVT	74LVT	2.7	3.6	3.6 @ V_{CC} = 3.0 V	-32/64 @ V_{CC} = 3.0 V	TTL	

MiniGate Family	Number of Gates	Device Prefix	V_{CC} Min (V)	V_{CC} Max (V)	t_{PD} (nS)	I_{OUT} (mA)	Input Logic Level	Packages
HC	1	MC74HC1G/NC7S	2	6	6.5 @ V_{CC} = 5 V	±5.2 @ V_{CC} = 6 V	CMOS	TSOP, SC-88, SC-74, SOT-553, SOT-953, US8, UDFN, UQFN, MicroPak
HCT	1	NC7ST	4.5	5.5	6.5 @ V_{CC} = 5 V	±2 @ V_{CC} = 6 V	TTL	
VHC	1	MC74VHC1G/NLU1G/NL17SH	1.65	5.5	3.8 @ V_{CC} = 4.5 V	±8 @ V_{CC} = 4.5 V	CMOS	
	2	NLU2G						
	3	NLU3G						
VHCT	1	MC74VHCT1G/NLU1GT/NL17SHT	4.5	5.5	3.6 @ V_{CC} = 4.5 V	±8 @ V_{CC} = 4.5 V	TTL	
	2	NLU2GT						
	3	NLU3GT						
LCX	1	NL17SZ/NC7SZ/NLX1G	1.65	5.5	2.4 @ V_{CC} = 3 V	±24 @ V_{CC} = 3 V	CMOS	
	2	NC27WZ/NC7WZ/NLX2G						
	3	NL37WZ/NC7NZ/NLX3G						
VCX	1	NL17SV/NC7SV	0.9	3.6	1.0 @ V_{CC} = 3 V	±24 @ V_{CC} = 3 V	LVTTL	
SG	1	NL17SGxx	0.9	3.6	2.2 @ V_{CC} = 3 V	±8 @ V_{CC} = 3 V	LVTTL	
SP	1	NC7SP	0.9	3.6	3.0 @ V_{CC} = 3 V	±2.6 @ V_{CC} = 3 V	LVTTL	
	2	NC7WP						
	3	NC7NP						
AUP	1	74AUP1G	0.8	3.6	2.9 @ V_{CC} = 3 V	±4 @ V_{CC} = 3 V	Schmitt	
	1	74AUP1T	2.3	3.6	3.3 @ V_{CC} = 3 V	±4 @ V_{CC} = 3 V	Schmitt	

Omniclock Programmable Clock Synthesizers

Key Features

- Single PLL
- Input Frequency Range:
  - Crystal: 3 – 50 MHz (low cost ESR crystal compatible)
  - Clock: 3 – 200 MHz (single-ended only)
- Up to 3 single-ended (LVCMOS/LVTTL) outputs, or up to 1 differential (LVPECL, LVDS, HCSL or CML) output + 1 single-ended (LVCMOS/LVTTL) output
- Output Frequency Range: 8 kHz (Min), 200 MHz (Max)
- Programmable Spread Spectrum Capabilities for EMI Suppression
  - Center Spread (0.125% steps): ± 0.125% to ± 3%
  - Down Spread (0.25% steps): -0.25% to -4%
  - Modulation Rate: 30 kHz – 130 kHz
- PLL Bypass mode
- Individual Output Enable pin for each output and Power Down Capability
- Individual Output Voltage pins per output, allowing setting of output voltage (1.8 V, 2.5 V or 3.3 V; equal to or less than VDD)
- Automatic Gain Control (Crystal Power Limiting)
- Programmable internal input crystal load capacitors
- Programmable Output Drive current
- Up to 4 independent configurations using SELx pins
- Supply Voltage: 3.3 V ±10%; 2.5 V ± 10%; 1.8 V ± 0.1 V
- Temperature Range: -40°C to +85°C
- Available in QFN-16 (3 mm x 3 mm) and WDFN-8 (2 mm x 2 mm) packages

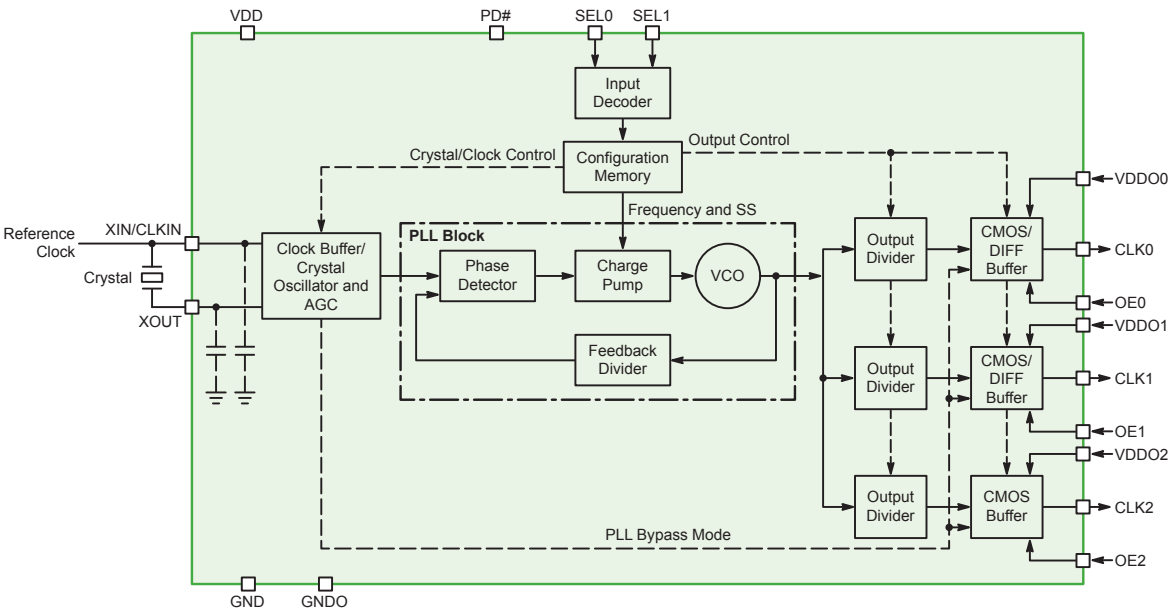

Block Diagram

Omniclock Programmable Clock Synthesizers

Using Omniclock in Your System

Customer orders blank Omniclock devices

Customer uses free GUI and supplied evaluation board to configure the blank device to the desired parameters: frequency, drive strength, spread spectrum, etc.

Customer provides configuration file to ON Semiconductor sales channel

ON Semiconductor programs device in factory with desired customer configuration, and creates customer-specific part number

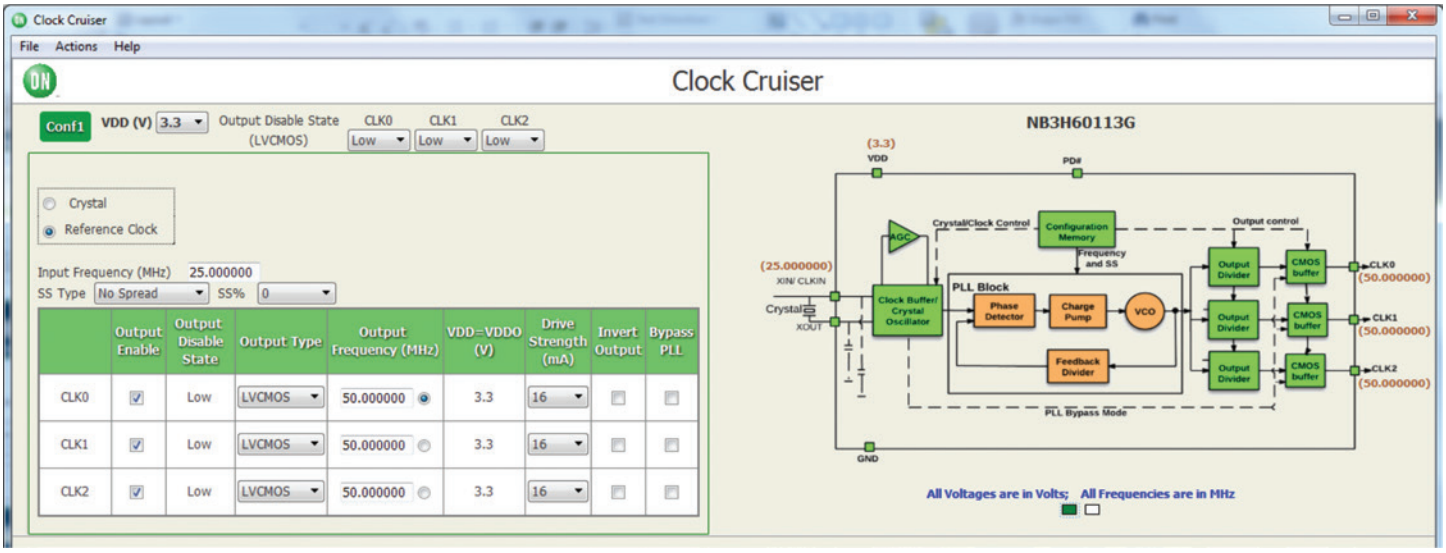

Configuration GUI

Device	Individual OE	Individual V_{ddo}	Supply Voltage (V)	Number of Configurations	Number of Outputs	Package
NB3H63143G	Yes	Yes	2.5 / 3.3	4	3	QFN-16
NB3H60113G	No	No	2.5 / 3.3	1	3	DFN-8
NB3V63143G	Yes	Yes	1.8	4	3	QFN-16
NB3V60113G	No	No	1.8	1	3	DFN-8

EMI Reduction with Spread Spectrum Clocks

Spread spectrum frequency modulator clock generators reduce electromagnetic interference (EMI) at the clock source, allowing system wide EMI reduction on all clock dependent signals.

	Frequency (MHz)	Without Spread Spectrum (dB)	With Spread Spectrum (dB)	Reduction (dB)
Fundamental	46.9	-28	-28.4	0.4
3rd Harmonic	143.9	-31.1	-36.9	5.8
5th Harmonic	238.5	40	-47.1	7.1
7th Harmonic	333.1	-50.7	-57.6	6.9
9th Harmonic	434.9	-43.7	-50.9	7.2
11th Harmonic	524.7	-41.8	-49	7.2



Device	V_{DD} Typ (V)	f_{in} Typ (MHz)	f_{out} Typ (MHz)	Deviation Type	Features	Package(s)
P3MS650103H	1.8; 2.5; 3.3	15-30; 15-60	15-30; 15-60	±0.45% @ 24 MHz	Power Down	WDFN-4
PCS3PS550A	2.3-3.6	18-36	18-36	±0.4 to ±2.5	PDB	WDFN-8

4-PLL Audio/Video Clock Generator with Spread Spectrum Clock

Key Features – P1P40167

- Eliminates multiple crystals by using one device to generate multiple clocks
- Integrated loop filter
- Input: 27 MHz crystal or external input
- Outputs:
  - 27 MHz reference output
  - Fixed output frequency of 48 MHz and 22.5792 MHz
  - Configurable spread spectrum 37 MHz output
  - Selectable audio clock frequency of 22.5792 MHz or 24.576 MHz
- LVCMOS input and outputs
- Serial interface to control output enable/disable, SS selection and PLL frequency selection
- 1.8 V supply voltage

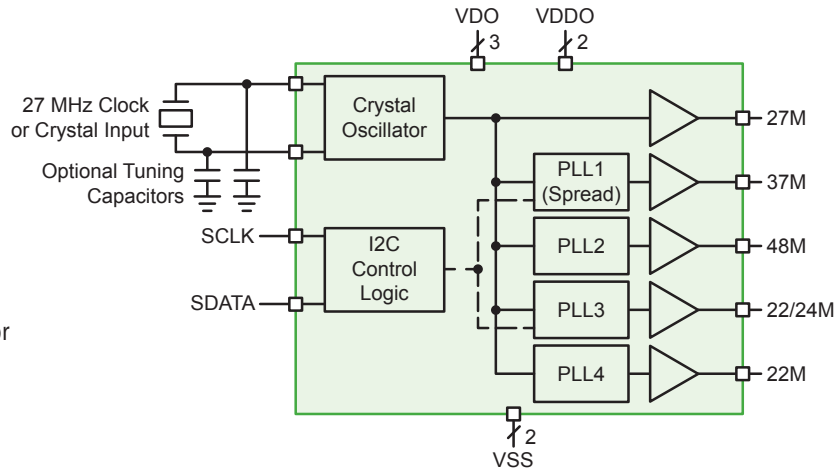

P1P40167 Block Diagram

INTERFACE & MEMORY

Sales and Design Assistance from ON Semiconductor

ON Semiconductor Technical Support
www.onsemi.com/support

ON SEMICONDUCTOR INTERNATIONAL SALES OFFICES		
GREATER CHINA	Beijing	86-10-8577-8200
	Hong Kong	852-2689-0088
	Shenzhen	86-755-8209-1128
	Shanghai	86-21-5131-7168
	Taipei, Taiwan	886-2-2377-9911
FRANCE	Paris	33 (0)1 39-26-41-00
GERMANY	Munich	49 (0) 89-93-0808-0
INDIA	Bangalore	91-98-808-86706
ISRAEL	Raanana	972 (0) 9-9609-111
ITALY	Milan	39 02 9239311
JAPAN	Tokyo	81-3-6880-1777
KOREA	Seoul	82-31-786-3700
MALAYSIA	Penang	60-4-6463877
SINGAPORE	Singapore	65-6484-8603
SLOVAKIA	Piestany	421 33 790 2450
UNITED KINGDOM	Maidenhead	44 (0) 1628 244326

ON Semiconductor Distribution Partners

Allied Electronics	www.alliedelec.com	(800) 433-5700
ALTIMA Company, Macnica, Inc.	www.alt.macnica.co.jp/about/english.html	(81) 45 476 2155
Arrow Electronics	www.arrow.com	(800) 777-2776
Avnet	www.em.avnet.com	(800) 332-8638
Daiwa Distribution Ltd.	www.daiwahk.com	(852) 2341 3351
Digi-Key	www.digikey.com	(800) 344-4539
EBV Elektronik	www.ebv.com/en/locations.html	(49) 8121 774-0
Future & FAI Electronics	www.futureelectronics.com/contact	1-800-FUTURE1 (388-8731)
Mouser Electronics	www.mouser.com	(800) 346-6873
Newark/Farnell	www.farnell.com/onsemi	(800) 4-NEWARK
OS Electronics Co., Ltd.	www.oselec.com	Japanese: (81) 3 3255 5985 Other Languages: (81) 3 3255 6066
Promate Electronic Co.	www.promate.com.tw	(886) 2 2659 0303
Ryoden Corporation	www.ryoden.co.jp/en	(81) 3 5396 6310
Ryosan Company, Limited	www.ryosan.co.jp/eng	(81) 3 3862 2635
RS Components	www.rs-components.com	(44) 153 644 4414
Segyung Britestone Co.	www.britestone.com	(82) 2 3218 1511
Serial Microelectronics, HK	www.serialsys.com.hk	(852) 2790 8220
World Peace Industries Co.	www.wpi-group.com	(852) 2365 4860
WT Microelectronics Co.	www.wtmec.com	(852) 2950 0820
Yosun Electronics	www.yosun.com.tw	(886) 2 2659 8168

For a comprehensive listing of ON Semiconductor Sales Offices, Distributors, and Rep Firms, please visit:

Americas & EMEA: www.onsemi.com/sales
China: www.onsemi.cn/sales
Japan: www.onsemi.jp/sales

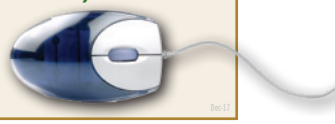

AMERICAS REP FIRMS

Alabama	Huntsville	e-Components	(256) 533-2444
Brazil	Countrywide	Ammon & Rizos	(+55) 11-4688-1960
California	Bay Area	Electec	(408) 496-0706
Canada	Eastern Canada	Astec	(905) 607-1444
Connecticut	Statewide	Paragon Electronic Systems	(603) 645-7630
Florida	Statewide	e-Components	(888) 468-2444
Georgia	Atlanta	e-Components	(888) 468-2444
Illinois	Statewide	Matrix – Design Technology	(952) 400-1070
Indiana	Fishers	Bear VAI	(317) 570-0707
Iowa	Statewide	Matrix – Design Technology	(319) 362-6824
Maine	Statewide	Paragon Electronic Systems	(603) 645-7630
Maryland	Columbia	Mechtronics Sales	(410) 309-9600
Massachusetts	Statewide	Paragon Electronic Systems	(603) 645-7630
Mexico	Countrywide	Ammon & Rizos	(+55) 11-4688-1960
Michigan	St. Joseph	Bear VAI	(440) 526-1991
Minnesota	Eden Prairie	Matrix – Design Technology	(952) 400-1070
Missouri	Belton	Matrix – Design Technology	(816) 589-2308
Nebraska	Statewide	Matrix – Design Technology	(816) 589-2308
New Hampshire	Statewide	Paragon Electronic Systems	(603) 645-7630
New Jersey	Statewide	S.J. Metro	(516) 942-3232
New York	Binghamton	TriTech - Full Line Rep	(607) 722-3580
	Jericho	S.J. Metro	(516) 942-3232
	Rochester	TriTech - Full Line Rep	(585) 385-6500
North Carolina	Raleigh	e-Components	(888) 468-2444
North Dakota	Statewide	Matrix – Design Technology	(952) 400-1070
Ohio	Brecksville	Bear VAI Technology	(440) 526-1991
Puerto Rico	Countrywide	e-Components	(888) 468-2444
Rhode Island	Statewide	Paragon Electronic Systems	(603) 645-7630
South Dakota	Statewide	Matrix – Design Technology	(952) 400-1070
Vermont	Statewide	Paragon Electronic Systems	(603) 645-7630
Wisconsin	Statewide	Matrix – Design Technology	(952) 400-1070

BelaSigna is a registered trademark, and Clarity+, EasyPRO, ecoSWITCH, MiniGate, and SignaKlara are trademarks of ON Semiconductor. AirFuel and the AirFuel logo are trademarks of the AirFuel Alliance. Arm and Cortex are registered trademarks of Arm Limited (or its subsidiaries) in the EU and/or elsewhere. Bluetooth and the Bluetooth logo are registered trademarks of Bluetooth SIG. The Hisilicon logo is a registered trademark of Huawei Technologies Co., Ltd. The Mediatek logo is a trademark of MediaTek Inc. The microSD logo is a trademark of SD-3C, LLC in the United States, other countries or both. The Intel logo is a registered trademark of Intel Corporation or its subsidiaries in the U.S. and/or other countries. The I2C Bus logo is a trademark of NXP B.V. MIPI is a registered trademark of MIPI Alliance, Inc. The Qualcomm logo is a registered trademark of Qualcomm Incorporated. USB logos are trademarks of USB Implementers Forum, Inc. ZigBee is a registered trademark of ZigBee Alliance. All other brand names and product names appearing in this document are trademarks of their respective holders.

ON Semiconductor and the ON Semiconductor logo are trademarks of Semiconductor Components Industries, LLC dba ON Semiconductor or its subsidiaries in the United States and/or other countries. ON Semiconductor owns the rights to a number of patents, trademarks, copyrights, trade secrets, and other intellectual property. A listing of ON Semiconductor's product/patent coverage may be accessed at www.onsemi.com/site/pdf/Patent-Marking.pdf. ON Semiconductor reserves the right to make changes without further notice to any products herein. ON Semiconductor makes no warranty, representation or guarantee regarding the suitability of its products for any particular purpose, nor does ON Semiconductor assume any liability arising out of the application or use of any product or circuit, and specifically disclaims any and all liability, including without limitation special, consequential or incidental damages. Buyer is responsible for its products and applications using ON Semiconductor products, including compliance with all laws, regulations and safety requirements or standards, regardless of any support or applications information provided by ON Semiconductor. "Typical" parameters which may be provided in ON Semiconductor data sheets and/or specifications can and do vary in different applications and actual performance may vary over time. All operating parameters, including "Typicals" must be validated for each customer application by customer's technical experts. ON Semiconductor does not convey any license under its patent rights nor the rights of others. ON Semiconductor products are not designed, intended, or authorized for use as a critical component in life support systems or any FDA Class 3 medical devices or medical devices with a same or similar classification in a foreign jurisdiction or any devices intended for implantation in the human body. Should Buyer purchase or use ON Semiconductor products for any such unintended or unauthorized application, Buyer shall indemnify and hold ON Semiconductor and its officers, employees, subsidiaries, affiliates, and distributors harmless against all claims, costs, damages, and expenses, and reasonable attorney fees arising out of, directly or indirectly, any claim of personal injury or death associated with such unintended or unauthorized use, even if such claim alleges that ON Semiconductor was negligent regarding the design or manufacture of the part. ON Semiconductor is an Equal Opportunity/Affirmative Action Employer. This literature is subject to all applicable copyright laws and is not for resale in any manner.

PUBLICATION ORDERING INFORMATION

LITERATURE FULFILLMENT:
Literature Distribution Center for ON Semiconductor
19521 E. 32nd Pkwy, Aurora, Colorado 80011 USA
Phone: 303-675-2175 or 800-344-3860 Toll Free USA/Canada
Fax: 303-675-2176 or 800-344-3867 Toll Free USA/Canada
Email: orderlit@onsemi.com

N. American Technical Support: 800-282-9855 Toll Free USA/Canada.
Europe, Middle East and Africa Technical Support:
Phone: 421 33 790 2910

ON Semiconductor Website: **www.onsemi.com**

Order Literature: http://www.onsemi.com/orderlit

For additional information, please contact your local Sales Representative

BRD8026-11 PRINTED IN USA 05/18 IRONWOOD XXXX 1K

BRD8026/D