# Step-Down Switching Regulator, 0.5 A

# LM2594

The LM2594 regulator is monolithic integrated circuit ideally suited for easy and convenient design of a step−down switching regulator (buck converter). It is capable of driving a 0.5 A load with excellent line and load regulation. This device is available in adjustable output version. It is internally compensated to minimize the number of external components to simplify the power supply design.

Since LM2594 converter is a switch−mode power supply, its efficiency is significantly higher in comparison with popular three−terminal linear regulators, especially with higher input voltages. The LM2594 operates at a switching frequency of 150 kHz thus allowing smaller sized filter components than what would be needed with lower frequency switching regulators. Available in a standard 8−Lead Surface Mount package.

The other features include a guaranteed ±4% tolerance on output voltage within specified input voltages and output load conditions, and ±15% on the oscillator frequency. External shutdown is included, featuring 50 μA (typical) standby current. Self protection features include switch cycle−by−cycle current limit for the output switch, as well as thermal shutdown for complete protection under fault conditions.

### Features

- Adjustable Output Voltage Range 1.23 V – 37 V
- Guaranteed 0.5 A Output Load Current
- Wide Input Voltage Range up to 40 V
- 150 kHz Fixed Frequency Internal Oscillator
- TTL Shutdown Capability
- Low Power Standby Mode, typ 50 μA
- Thermal Shutdown and Current Limit Protection
- Internal Loop Compensation
- Moisture Sensitivity Level (MSL) Equals 1
- This Device is Pb−Free

### Applications

- Simple High−Efficiency Step−Down (Buck) Regulator
- Efficient Pre−Regulator for Linear Regulators
- On−Card Switching Regulators
- Positive to Negative Converter (Buck−Boost)
- Negative Step−Up Converters
- Power Supply for Battery Chargers




**SOIC−8**
**D SUFFIX**
**CASE 751**

### MARKING DIAGRAM

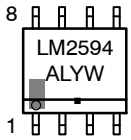


A = Assembly Location
L = Wafer Lot
YW = Assembly Start Week
▪ = Pb−Free Package

### PIN CONNECTIONS

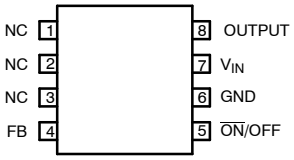


**(Top View)**

### ORDERING INFORMATION

| Device | Package | Shipping† |
|---|---|---|
| LM2594DADJR2G | SOIC-8 (Pb Free) | 2500 / Tape & Reel |

†For information on tape and reel specifications, including part orientation and tape sizes, please refer to our Tape and Reel Packaging Specification Brochure, BRD8011/D.

© Semiconductor Components Industries, LLC, 2009

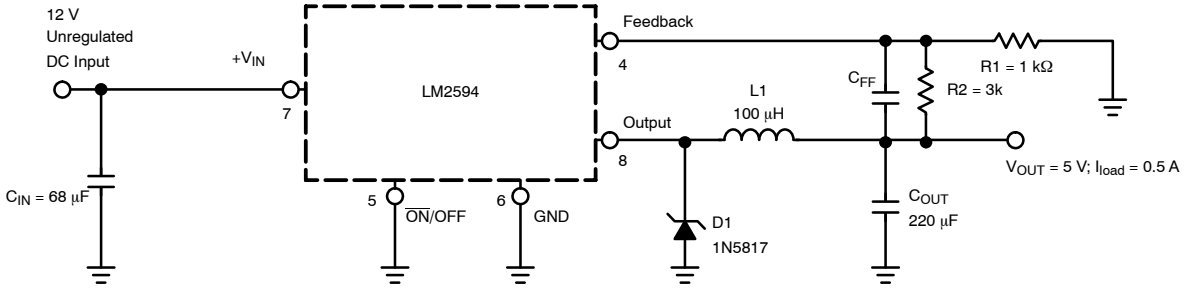


**Figure 1. Typical Application**

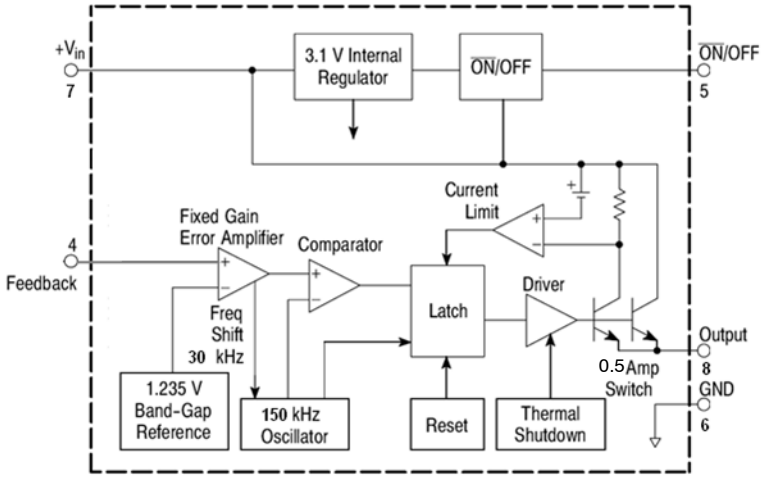


**Figure 2. Representative Block Diagram**

## PIN FUNCTION DESCRIPTION

| Pin No. | Symbol | Description (Refer to Figure 1) |
|---|---|---|
| 1 – 3 | NC | Not Connected |
| 4 | FB | This pin is the direct input of the error amplifier and the resistor network R2, R1 is connected externally to allow programming of the output voltage. |
| 5 | $\overline{ON}$/OFF | Allows the switching regulator circuit to be shut down using logic levels, thus dropping the total input supply current to approximately 50 μA. The threshold voltage is typical. 1.6 V. Applying a voltage above this value (up to $V_{IN}$) shuts the regulator off. If the voltage applied to this pin is lower than 1.6 V or if this pin is left open, the regulator will be in the “on” condition. |
| 6 | GND | Circuit ground pin. See the information about the printed circuit board layout. |
| 7 | $+V_{IN}$ | Positive input supply for LM2594 step−down switching regulator. In order to minimize voltage transients and to supply the switching currents needed by the regulator, a suitable input bypass capacitor must be present ($C_{IN}$ in Figure 1) |
| 8 | OUTPUT | Emitter of the internal switch. The saturation voltage Vsat of the output switch is typically 1 V. It should be kept in mind that PCB area connected to this pin should be kept to a minimum in order to minimize coupling to sensitive circuitry |

**MAXIMUM RATINGS**

| Symbol | Rating | Value | Unit |
|---|---|---|---|
| $V_{in}$ | Maximum Supply Voltage | 45 | V |
| $\overline{ON}$/OFF | $\overline{ON}$/OFF Pin Input Voltage | $-0.3\ V \le V \le +V_{in}$ | V |
| $V_{out}$ | Output Voltage to Ground (Steady−State) | −1.0 | V |
| | **Power Dissipation** | | |
| $P_D$ | 8−Lead Surface Mount | Internally Limited | W |
| $R_{\theta JA}$ | Thermal Resistance, Junction−to−Ambient | 175 | °C/W |
| $T_{stg}$ | Storage Temperature Range | −65 to +150 | °C |
| − | Minimum ESD Rating (Human Body Model: C = 100 pF, R = 1.5 kΩ) | 2.0 | kV |
| − | Lead Temperature (Soldering, 10 seconds) | 260 | °C |
| $T_J$ | Maximum Junction Temperature | 150 | °C |

Stresses exceeding those listed in the Maximum Ratings table may damage the device. If any of these limits are exceeded, device functionality should not be assumed, damage may occur and reliability may be affected.

**OPERATING RATINGS** (Operating Ratings indicate conditions for which the device is intended to be functional, but do not guarantee specific performance limits. For guaranteed specifications and test conditions, see the Electrical Characteristics table)

| Symbol | Rating | Value | Unit |
|---|---|---|---|
| $T_J$ | Operating Temperature Range | −40 to +125 | °C |
| $V_{IN}$ | Supply Voltage | 4.5 V to 40 V | V |

## SYSTEM PARAMETERS

**ELECTRICAL CHARACTERISTICS** Specifications with standard type face are for $T_J$ = 25°C, and those with boldface type apply over full Operating Temperature Range −40°C to +125°C

| Characteristics | Symbol | Min | Typ | Max | Unit |
|---|---|---|---|---|---|
| **LM2594** (Note 1, Test Circuit Figure 16) | | | | | |
| Feedback Voltage ($V_{in}$ = 12 V, $I_{Load}$ = 0.1 A, $V_{out}$ = 5.0 V, ) | $V_{FB_nom}$ | | 1.23 | | V |
| Feedback Voltage (8.0 V ≤ $V_{in}$ ≤ 40 V, 0.1 A ≤ $I_{Load}$ ≤ 0.5 A, $V_{out}$ = 5.0 V) | $V_{FB}$ | 1.193<br>**1.18** | | 1.267<br>**1.28** | V |
| Efficiency ($V_{in}$ = 12 V, $I_{Load}$ = 0.5 A, $V_{out}$ = 5.0 V) | η | – | 80 | | % |
| Feedback Bias Current ($V_{out}$ = 5.0 V) | $I_b$ | | 25 | 100<br>**200** | nA |
| Oscillator Frequency (Note 2) | $f_{osc}$ | 135<br>**120** | 150 | 165<br>**180** | kHz |
| Saturation Voltage ($I_{out}$ = 0.5 A, Notes 3 and 4) | $V_{sat}$ | | 1.0 | 1.2<br>**1.4** | V |
| Max Duty Cycle “ON” (Note 4) | DC | | 95 | | % |
| Current Limit (Peak Current, Notes 3 and 4) | $I_{CL}$ | 0.7<br>**0.65** | 1.0 | 1.6<br>**1.8** | A |
| Output Leakage Current (Notes 5 and 6)<br>Output = 0 V<br>Output = −1.0 V | $I_L$ | | <br>0.5<br>13 | <br>2.0<br>30 | mA |
| Quiescent Current (Note 5) | $I_Q$ | | 5.0 | 10 | mA |
| Standby Quiescent Current ($\overline{ON}$/OFF Pin = 5.0 V (“OFF”))<br>(Note 6) | $I_{stby}$ | | 50 | 200<br>**250** | μA |
| **$\overline{ON}$/OFF PIN LOGIC INPUT** | | | | | |
| Threshold Voltage | | | 1.6 | | V |
| $V_{out}$ = 0 V (Regulator OFF) | $V_{IH}$ | 2.2<br>**2.4** | | | V |
| $V_{out}$ = Nominal Output Voltage (Regulator ON) | $V_{IL}$ | | | 1.0<br>**0.8** | V |
| **$\overline{ON}$/OFF Pin Input Current** | | | | | |
| $\overline{ON}$/OFF Pin = 5.0 V (Regulator OFF) | $I_{IH}$ | – | 15 | 30 | μA |
| $\overline{ON}$/OFF Pin = 0 V (regulator ON) | $I_{IL}$ | – | 0.01 | 5.0 | μA |

1. External components such as the catch diode, inductor, input and output capacitors can affect switching regulator system performance. When the LM2594 is used as shown in the Figure 16 test circuit, system performance will be as shown in system parameters section.
2. The oscillator frequency reduces to approximately 30 kHz in the event of an output short or an overload which causes the regulated output voltage to drop approximately 40% from the nominal output voltage. This self protection feature lowers the average dissipation of the IC by lowering the minimum duty cycle from 5% down to approximately 2%.
3. No diode, inductor or capacitor connected to output (Pin 8) sourcing the current.
4. Feedback (Pin 4) removed from output and connected to 0 V.
5. Feedback (Pin 4) removed from output and connected to +12 V to force the output transistor “off”.
6. $V_{in}$ = 40 V.

## TYPICAL PERFORMANCE CHARACTERISTICS (Circuit of Figure 16)

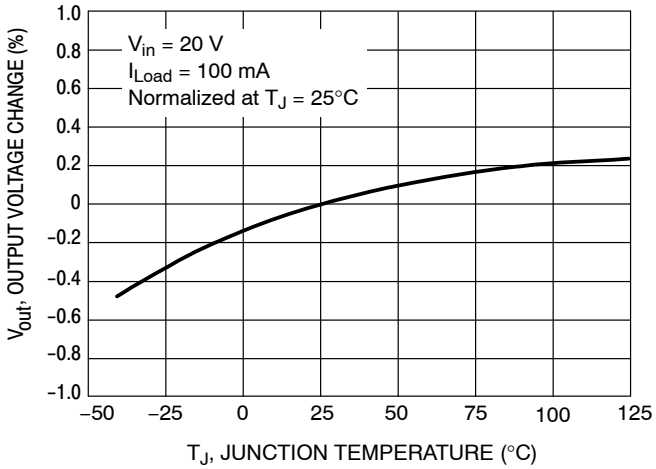


**Figure 3. Normalized Output Voltage**

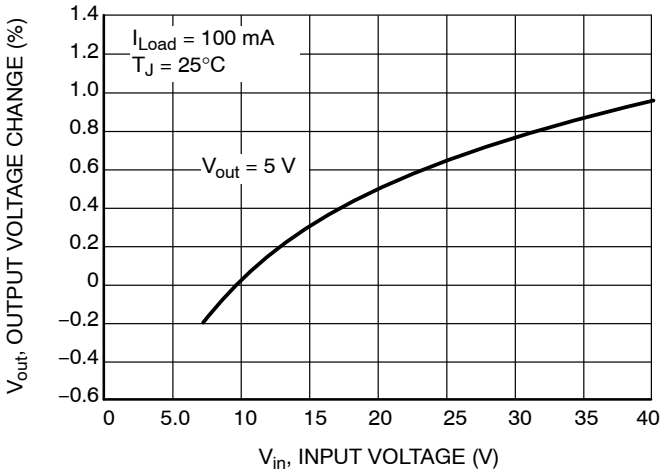


**Figure 4. Line Regulation**

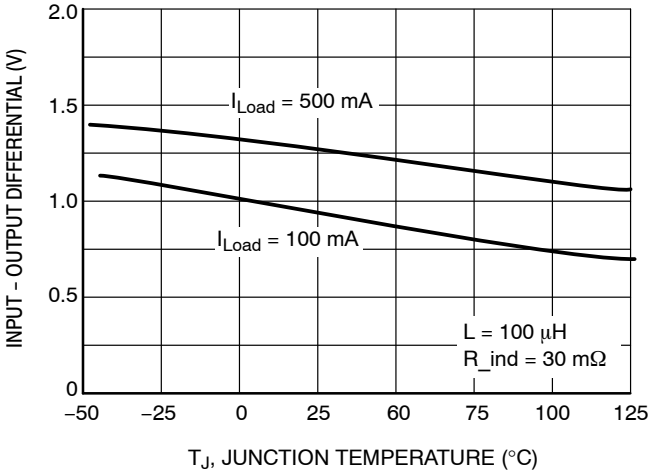


**Figure 5. Dropout Voltage**

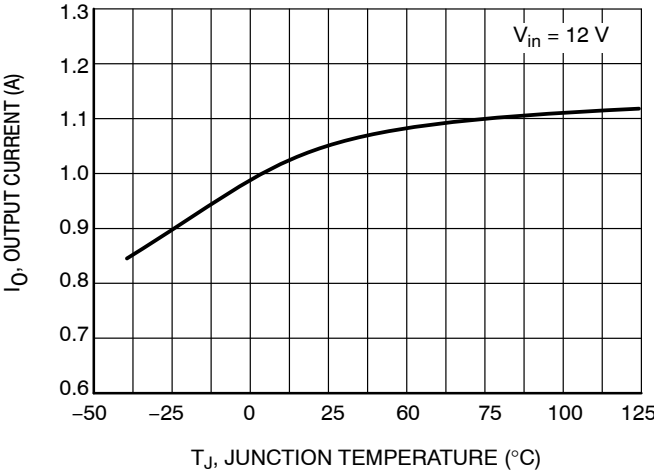


**Figure 6. Current Limit**

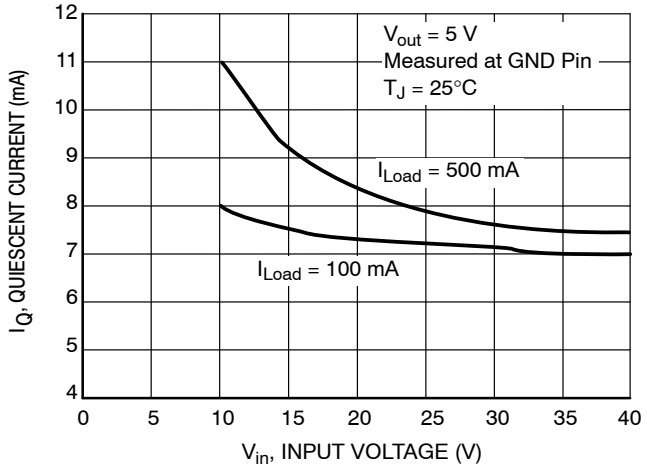


**Figure 7. Quiescent Current**

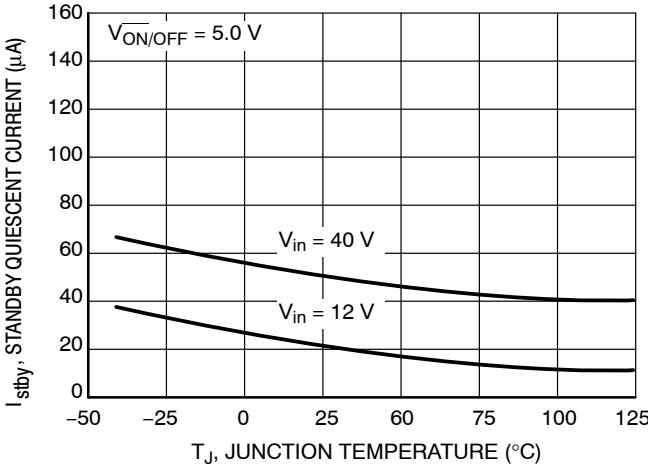


**Figure 8. Standby Quiescent Current**

## TYPICAL PERFORMANCE CHARACTERISTICS (Circuit of Figure 16)

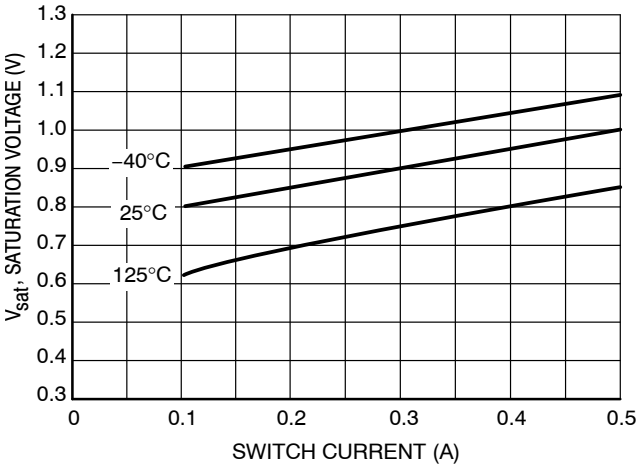


**Figure 9. Switch Saturation Voltage**

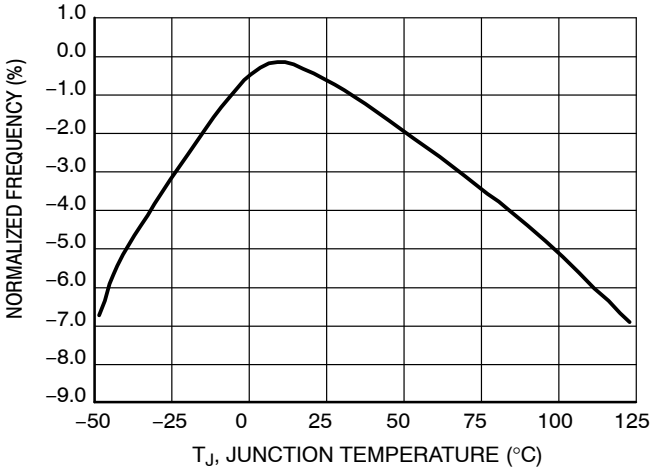


**Figure 10. Switching Frequency**

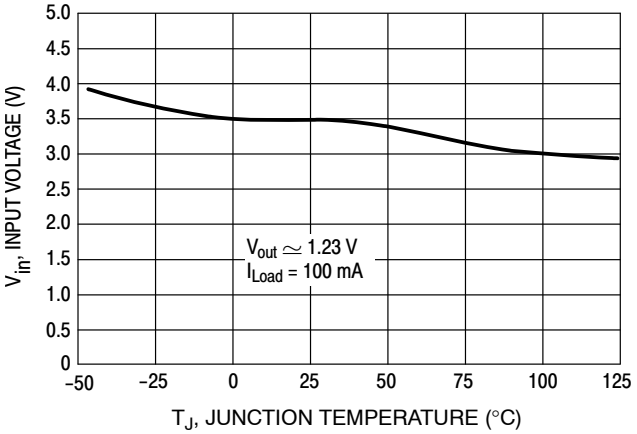


**Figure 11. Minimum Supply Operating Voltage**

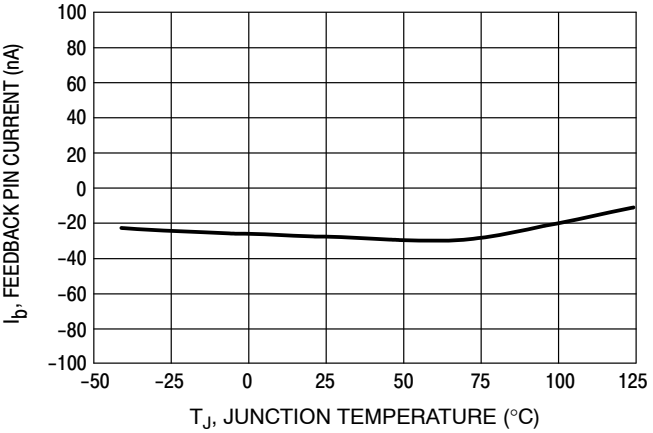


**Figure 12. Feedback Pin Current**

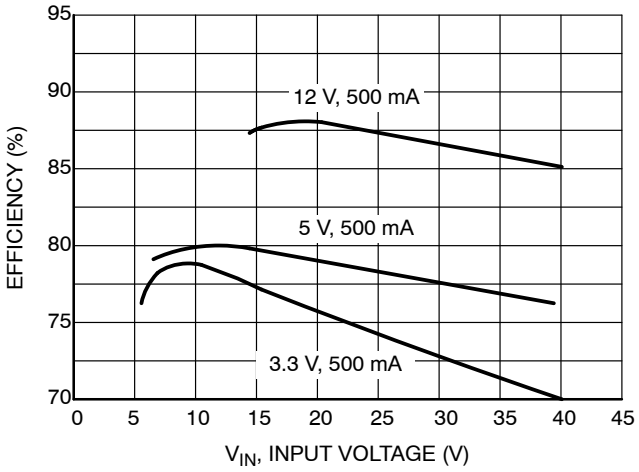


**Figure 13. Efficiency**

## TYPICAL PERFORMANCE CHARACTERISTICS (Circuit of Figure 16)

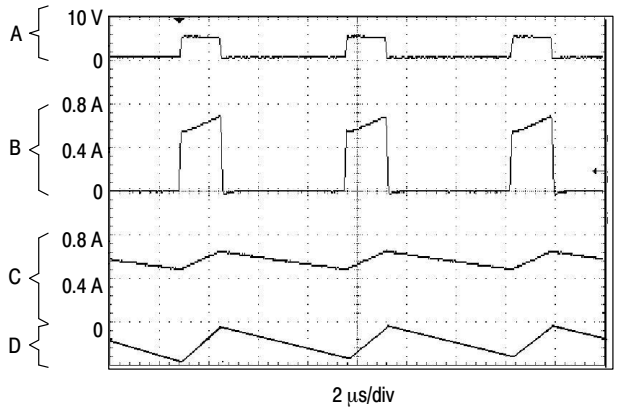


**Figure 14. Switching Waveforms**

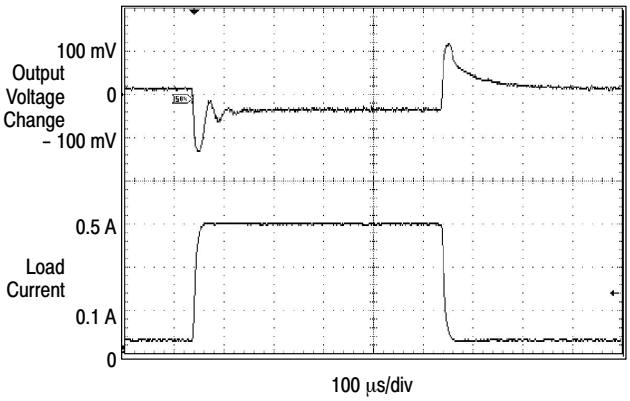


**Figure 15. Load Transient Response**

$V_{out}$ = 5 V
A: Output Pin Voltage, 10 V/div
B: Switch Current, 0.4 A/div
C: Inductor Current, 0.4 A/div, AC−Coupled
D: Output Ripple Voltage, 50 mV/div, AC−Coupled
**Horizontal Time Base: 2.0 μs/div**

### Adjustable Output Voltage Versions

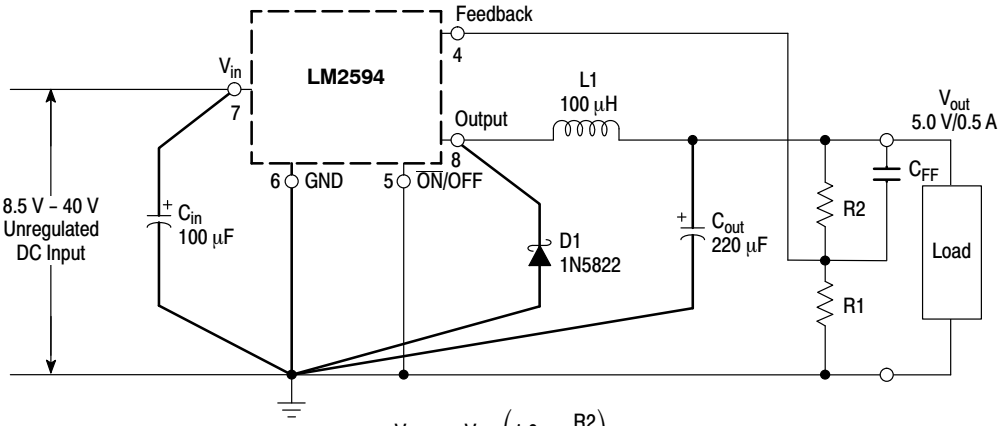


$$V_{out} = V_{ref}\left(1.0 + \frac{R2}{R1}\right)$$

$$R2 = R1\left(\frac{V_{out}}{V_{ref}} - 1.0\right)$$

Where $V_{ref}$ = 1.23 V, R1
between 1.0 k and 5.0 k

**Figure 16. Typical Test Circuit**

## PCB LAYOUT GUIDELINES

As in any switching regulator, the layout of the printed circuit board is very important. Rapidly switching currents associated with wiring inductance, stray capacitance and parasitic inductance of the printed circuit board traces can generate voltage transients which can generate electromagnetic interferences (EMI) and affect the desired operation. As indicated in the Figure 16, to minimize inductance and ground loops, the length of the leads indicated by heavy lines should be kept as short as possible.

For best results, single−point grounding (as indicated) or ground plane construction should be used.

On the other hand, the PCB area connected to the Pin 2 (emitter of the internal switch) of the LM2594 should be kept to a minimum in order to minimize coupling to sensitive circuitry.

Another sensitive part of the circuit is the feedback. It is important to keep the sensitive feedback wiring short. To assure this, physically locate the programming resistors near to the regulator, when using the adjustable version of the LM2594 regulator.

## DESIGN PROCEDURE

### Buck Converter Basics

The LM2594 is a "Buck" or Step−Down Converter which is the most elementary forward−mode converter. Its basic schematic can be seen in Figure 17.

The operation of this regulator topology has two distinct time periods. The first one occurs when the series switch is on, the input voltage is connected to the input of the inductor.

The output of the inductor is the output voltage, and the rectifier (or catch diode) is reverse biased. During this period, since there is a constant voltage source connected across the inductor, the inductor current begins to linearly ramp upwards, as described by the following equation:

$$I_{L(on)} = \frac{(V_{IN} - V_{OUT})t_{on}}{L}$$

During this "on" period, energy is stored within the core material in the form of magnetic flux. If the inductor is properly designed, there is sufficient energy stored to carry the requirements of the load during the "off" period.

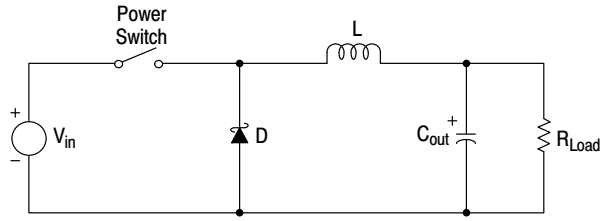


**Figure 17. Basic Buck Converter**

The next period is the "off" period of the power switch. When the power switch turns off, the voltage across the inductor reverses its polarity and is clamped at one diode voltage drop below ground by the catch diode. The current now flows through the catch diode thus maintaining the load current loop. This removes the stored energy from the inductor. The inductor current during this time is:

$$I_{L(off)} = \frac{(V_{OUT} - V_D)t_{off}}{L}$$

This period ends when the power switch is once again turned on. Regulation of the converter is accomplished by varying the duty cycle of the power switch. It is possible to describe the duty cycle as follows:

$$d = \frac{t_{on}}{T}, \text{ where T is the period of switching.}$$

For the buck converter with ideal components, the duty cycle can also be described as:

$$d = \frac{V_{out}}{V_{in}}$$

Figure 18 shows the buck converter, idealized waveforms of the catch diode voltage and the inductor current.

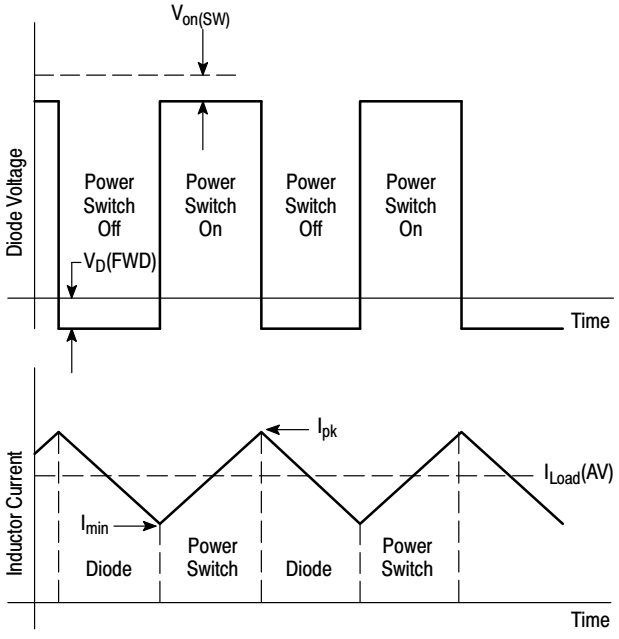


**Figure 18. Buck Converter Idealized Waveforms**

## PROCEDURE (ADJUSTABLE OUTPUT VERSION: LM2594)

| Procedure | Example |
|---|---|
| **Given Parameters:**<br>$V_{out}$ = Regulated Output Voltage<br>$V_{in(max)}$ = Maximum DC Input Voltage<br>$I_{Load(max)}$ = Maximum Load Current | **Given Parameters:**<br>$V_{out}$ = 5.0 V<br>$V_{in(max)}$ = 12 V<br>$I_{Load(max)}$ = 0.5 A |
| **1. Programming Output Voltage**<br>To select the right programming resistor R1 and R2 value (see Figure 1) use the following formula:<br>$V_{out} = V_{ref}\left(1.0 + \frac{R2}{R1}\right)$ where $V_{ref}$ = 1.23 V<br>Resistor R1 can be between 1.0 k and 5.0 kΩ. (For best temperature coefficient and stability with time, use 1% metal film resistors).<br>$R2 = R1\left(\frac{V_{out}}{V_{ref}} - 1.0\right)$ | **1. Programming Output Voltage** (selecting R1 and R2)<br>Select R1 and R2:<br>$V_{out} = 1.23\left(1.0 + \frac{R2}{R1}\right)$ Select R1 = 1.0 kΩ<br>$R2 = R1\left(\frac{V_{out}}{V_{ref}} - 1.0\right) = \left(\frac{5\ V}{1.23\ V} - 1.0\right)$<br>R2 = 3.0 kΩ, choose a 3.0k metal film resistor. |
| **2. Input Capacitor Selection ($C_{in}$)**<br>To prevent large voltage transients from appearing at the input and for stable operation of the converter, an aluminium or tantalum electrolytic bypass capacitor is needed between the input pin $+V_{in}$ and ground pin GND This capacitor should be located close to the IC using short leads. This capacitor should have a low ESR (Equivalent Series Resistance) value.<br>For additional information see input capacitor section in the "Application Information" section of this data sheet. | **2. Input Capacitor Selection ($C_{in}$)**<br>A 68 μF, 50 V aluminium electrolytic capacitor located near the input and ground pin provides sufficient bypassing. |
| **3. Catch Diode Selection (D1)**<br>**A.** Since the diode maximum peak current exceeds the regulator maximum load current the catch diode current rating must be at least 1.2 times greater than the maximum load current. For a robust design, the diode should have a current rating equal to the maximum current limit of the LM2594 to be able to withstand a continuous output short.<br>**B.** The reverse voltage rating of the diode should be at least 1.25 times the maximum input voltage. | **3. Catch Diode Selection (D1)**<br>**A.** For this example, a 1.0 A current rating is adequate.<br>**B.** For $V_{in}$ = 12 V use a 20 V 1N5817 Schottky diode or any suggested fast recovery diode in the Table 2. |

## PROCEDURE (ADJUSTABLE OUTPUT VERSION: LM2594) (CONTINUED)

| Procedure | Example |
|---|---|
| **4. Inductor Selection (L1)**<br>**A.** Use the following formula to calculate the inductor Volt x microsecond [V x μs] constant:<br>$E \times T = \left(V_{IN} - V_{OUT} - V_{SAT}\right) \times \frac{V_{OUT} + V_D}{V_{IN} - V_{SAT} + V_D} \times \frac{1000}{150\ kHz} (V \times \mu s)$<br>**B.** Match the calculated E x T value with the corresponding number on the vertical axis of the Inductor Value Selection Guide shown in Figure 19. This E x T constant is a measure of the energy handling capability of an inductor and is dependent upon the type of core, the core area, the number of turns, and the duty cycle.<br>**C.** Next step is to identify the inductance region intersected by the E x T value and the maximum load current value on the horizontal axis shown in Figure 19.<br>**D.** Select an appropriate inductor from Table 3.<br>The inductor chosen must be rated for a switching frequency of 150 kHz and for a current rating of 1.15 x $I_{Load}$. The inductor current rating can also be determined by calculating the inductor peak current:<br>$I_{p(max)} = I_{Load(max)} + \frac{\left(V_{in} - V_{out}\right) t_{on}}{2L}$<br>where $t_{on}$ is the "on" time of the power switch and<br>$t_{on} = \frac{V_{out}}{V_{in}} \times \frac{1.0}{f_{osc}}$ | **4. Inductor Selection (L1)**<br>**A.** Calculate E x T [V x μs] constant:<br>$E \times T = (12 - 5 - 1.0) \times \frac{5 + 0.5}{12 - 1 + 0.5} \times \frac{1000}{150\ kHz} (V \times \mu s)$<br>$E \times T = (6) \times \frac{5.5}{11.5} \times 6.7 (V \times \mu s)$<br>**B.** E x T = 19.2 [V x μs]<br>**C.** $I_{Load(max)}$ = 0.5 A<br>Inductance Region = L20<br>**D.** Proper inductor value = 100 μH<br>Choose the inductor from Table 3. |
| **5. Output Capacitor Selection ($C_{out}$)**<br>**A.** Since the LM2594 is a forward−mode switching regulator with voltage mode control, its open loop has 2−pole−1−zero frequency characteristic. The loop stability is determined by the output capacitor (capacitance, ESR) and inductance values.<br>For stable operation use recommended values of the output capacitors in Table 1.<br>Low ESR electrolytic capacitors between 180 μF and 1000 μF provide best results.<br>**B.** The capacitors voltage rating should be at least 1.5 times greater than the output voltage, and often much higher voltage rating is needed to satisfy low ESR requirement | **5. Output Capacitor Selection ($C_{out}$)**<br>**A.** In this example is recommended Nichicon PM capacitors: 220 μF/25 V |
| **6. Feedforward Capacitor ($C_{FF}$)**<br>It provides additional stability mainly for higher input voltages. For Cff selection use Table 1. The compensation capacitor between 0.6 nF and 15 nF is wired in parallel with the output voltage setting resistor R2, The capacitor type can be ceramic, plastic, etc.. | **6. Feedforward Capacitor ($C_{FF}$)**<br>In this example is recommended feedforward capacitor 1.5 nF. |

## LM2594 SERIES BUCK REGULATOR DESIGN PROCEDURES (CONTINUED)

**Table 1. RECOMMENDED VALUES OF THE OUTPUT CAPACITOR AND FEEDFORWARD CAPACITOR**

($I_{load}$ = 0.5 A)

| Nichicon Pm Capacitors | | | | | | | | | |
|---|---|---|---|---|---|---|---|---|---|
| $V_{in}$ (V) | Capacity/Voltage Range / ESR[μF/V/mΩ] | | | | | | | | |
| 40 | 1000/10/ 60 | 680/250 | 470/10/ 140 | 470/10/ 140 | 330/10/ 160 | 220/25/ 110 | 220/110 | 180/25/ 140 | 180/35/ 100 |
| 35 | 1000/10/ 60 | 680/150 | 470/10/ 140 | 330/10/ 160 | 180/25/ 140 | 180/25/ 140 | 180/25/ 140 | 180/25/ 140 | 180/35/ 100 |
| 26 | 1000/10/ 60 | 470/10/ 140 | 330/10/ 160 | 220/25/ 110 | 180/25/ 140 | 180/25/ 140 | 100/25/ 240 | 180/25/ 140 | |
| 20 | 1000/10/ 60 | 470/10/ 140 | 220/25/ 110 | 220/25/ 110 | 100/25/ 240 | 100/25/ 240 | 100/25/ 240 | | |
| 18 | 1000/10/ 60 | 470/10/ 140 | 220/25/ 110 | 220/25/ 110 | 100/25/ 240 | 100/25/ 240 | 100/25/ 240 | | |
| 12 | 470/10/ 140 | 470/10/ 140 | 220/25/ 110 | 180/25/ 140 | 100/25/ 240 | | | | |
| 10 | 470/10/ 140 | 470/10/ 140 | 220/25/ 110 | 180/25/ 140 | | | | | |
| $V_{out}$ (V) | 2 | 3 | 4 | 6 | 9 | 12 | 15 | 24 | 28 |
| $C_{FF}$ (nF) | 15 | 4.7 | 1.5 | 1.5 | 1.5 | 1.5 | 1 | 0.6 | 0.6 |

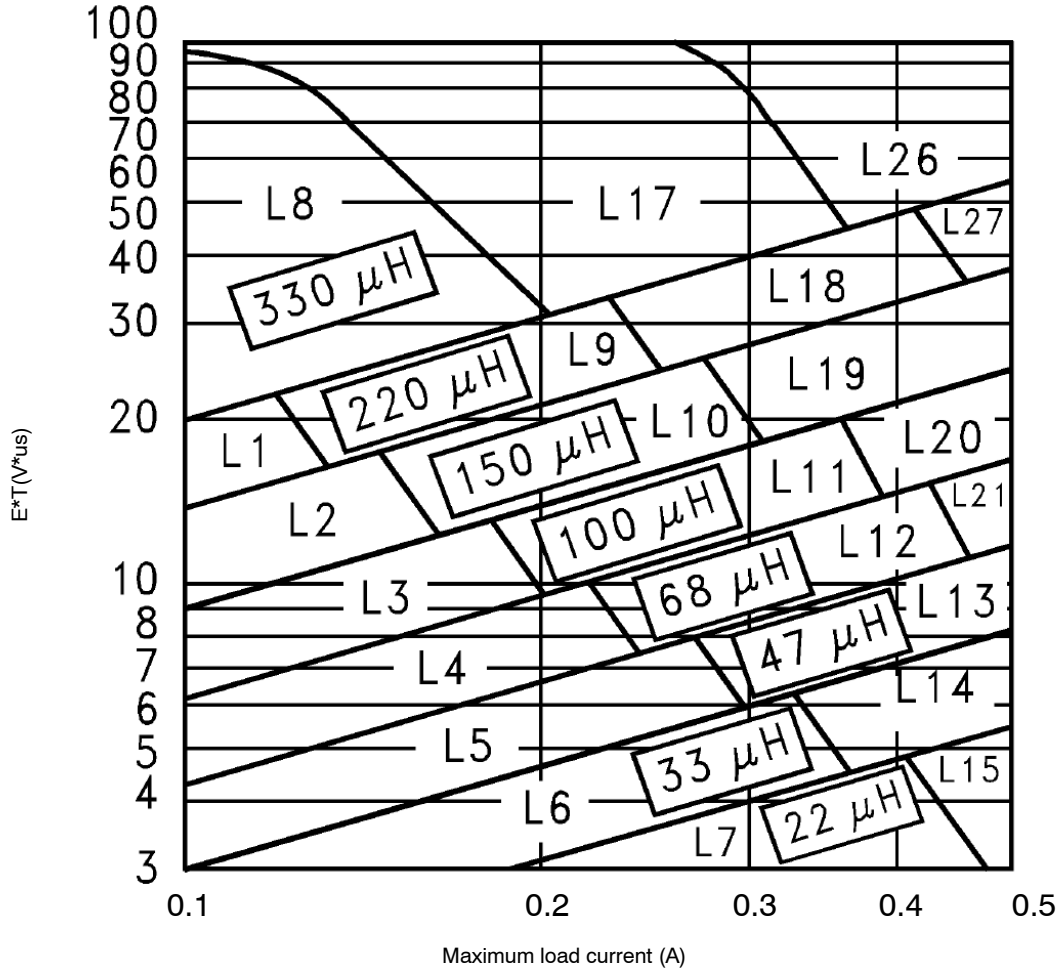


**Figure 19. Inductor Value Selection Guides (For Continuous Mode Operation)**

**Table 2. DIODE SELECTION**

| | 1A Diodes | | | |
|---|---|---|---|---|
| | Surface Mouns | | Through Hole | |
| $V_R$ | Schottky | Ultra Fast Recovery | Schottky | Ultra Fast Recovery |
| 20 V | MBRS140 | All of these diodes are rated to at least 60 V. MURS120 10BF10 | 1N5817 | All of these diodes are rated to at least 60 V. MUR120 HER101 11DF1 |
| 30 V | 10BQ040 | | SR102 | |
| 40 V | 10MQ040 | | 1N5818 | |
| 50 V or more | MBRS160 | | SR103 | |
| | 10BQ050 | | 11DQ03 | |
| | 10MQ060 | | 1N5819 | |
| | MBRS1100 | | SR104 | |
| | 10MQ090 | | 11DQ04 | |
| | SGL41-60 | | SR105 | |
| | SS16 | | MBR150 | |
| | MBRS140 | | 11DQ05 | |
| | 10BQ040 | | MBR160 | |

**Table 3. INDUCTOR MANUFACTURERS PART NUMBERS**

| | | | Schott | | Renco | | Pulse Engineering | | Coilcraft |
|---|---|---|---|---|---|---|---|---|---|
| | Inductance (μH) | Current (A) | Through Hole | Surface Mount | Through Hole | Surface Mount | Through Hole | Surface Mount | Surface Mount |
| L1 | 220 | 0.18 | 67143910 | 67144280 | RL−5470−3 | PE−53801 | PE−53801−S | − | DO1608−224 |
| L2 | 150 | 0.21 | 67143920 | 67144290 | RL−5470−4 | PE−53802 | PE−53802−S | − | DO1608−154 |
| L3 | 100 | 0.26 | 67143930 | 67144300 | RL−5470−5 | PE−53803 | PE−53803−S | − | DO1608−104 |
| L4 | 68 | 0.32 | 67143940 | 67144310 | RL−1284−68 | PE−53804 | PE−53804−S | − | DO1608−68 |
| L5 | 47 | 0.37 | 67148310 | 67148420 | RL−1284−47 | PE−53805 | PE−53805−S | − | DO1608−473 |
| L6 | 33 | 0.44 | 67148320 | 67148430 | RL−1284−33 | PE−53806 | PE−53806−S | − | DO1608−333 |
| L7 | 22 | 0.60 | 67148330 | 67148440 | RL−1284−22 | PE−53807 | PE−53807−S | − | DO1608−223 |
| L8 | 330 | 0.26 | 67143950 | 67144320 | RL−5470−2 | PE−53808 | PE−53808−S | − | DO3308−334 |
| L9 | 220 | 0.32 | 67143960 | 67144330 | RL−5470−3 | PE−53809 | PE−53809−S | − | DO3308−224 |
| L10 | 150 | 0.39 | 67143970 | 67144340 | RL−5470−4 | PE−53810 | PE−53810−S | − | DO3308−154 |
| L11 | 100 | 0.48 | 67143980 | 67144350 | RL−5470−5 | PE−53811 | PE−53811−S | − | DO3308−104 |
| L12 | 68 | 0.58 | 67143990 | 67144360 | RL−5470−6 | PE−53812 | PE−53812−S | − | DO1608−683 |
| L13 | 47 | 0.70 | 67144000 | 67144380 | RL−5470−7 | PE−53813 | PE−53813−S | − | DO3308−473 |
| L14 | 33 | 0.83 | 67148340 | 67148450 | RL−1284−33 | PE−53814 | PE−53814−S | − | DO1608−333 |
| L15 | 22 | 0.99 | 67148350 | 67148460 | RL−1284−22 | PE−53815 | PE−53815−S | − | DO1608−223 |
| L16 | 15 | 1.24 | 67148360 | 67148470 | RL−1284−15 | PE−53816 | PE−53816−S | − | DO1608−153 |
| L17 | 330 | 0.42 | 67144030 | 67144410 | RL−5471−1 | PE−53817 | PE−53817−S | − | DO3316−334 |
| L18 | 220 | 0.55 | 67144040 | 67144420 | RL−5471−2 | PE−53818 | PE−53818−S | − | DO3316−224 |
| L19 | 150 | 0.66 | 67144050 | 67144430 | RL−5471−3 | PE−53819 | PE−53819−S | RFB0810−151L | DO3316−154 |
| L20 | 100 | 0.82 | 67144060 | 67144440 | RL−5471−4 | PE−53820 | PE−53820−S | RFB0810−101L | DO3340P−104 |
| L21 | 68 | 0.99 | 67144070 | 67144450 | RL−5471−5 | PE−53821 | PE−53821−S | RFB0810−680L | DDO3316−683 |
| L26 | 330 | 0.80 | 67144100 | 67144480 | RL−5471−1 | PE−53826 | PE−53826−S | − | − |
| L27 | 220 | 1.00 | 67144110 | 67144490 | RL−5471−2 | PE−53827 | PE−53827−S | − | − |

## APPLICATION INFORMATION

### EXTERNAL COMPONENTS

#### Input Capacitor ($C_{in}$)

***The Input Capacitor Should Have a Low ESR***

For stable operation of the switch mode converter a low ESR (Equivalent Series Resistance) aluminium or solid tantalum bypass capacitor is needed between the input pin and the ground pin, to prevent large voltage transients from appearing at the input. It must be located near the regulator and use short leads. With most electrolytic capacitors, the capacitance value decreases and the ESR increases with lower temperatures. For reliable operation in temperatures below −25°C larger values of the input capacitor may be needed. Also paralleling a ceramic or solid tantalum capacitor will increase the regulator stability at cold temperatures.

***RMS Current Rating of $C_{in}$***

The important parameter of the input capacitor is the RMS current rating. Capacitors that are physically large and have large surface area will typically have higher RMS current ratings. For a given capacitor value, a higher voltage electrolytic capacitor will be physically larger than a lower voltage capacitor, and thus be able to dissipate more heat to the surrounding air, and therefore will have a higher RMS current rating. The consequence of operating an electrolytic capacitor beyond the RMS current rating is a shortened operating life. In order to assure maximum capacitor operating lifetime, the capacitor's RMS ripple current rating should be:

$$I_{rms} > 1.2 \times d \times I_{Load}$$

where d is the duty cycle, for a buck regulator

$$d = \frac{t_{on}}{T} = \frac{V_{out}}{V_{in}}$$

and $d = \frac{t_{on}}{T} = \frac{|V_{out}|}{|V_{out}| + V_{in}}$ for a buck−boost regulator.

#### Output Capacitor ($C_{out}$)

For low output ripple voltage and good stability, low ESR output capacitors are recommended. An output capacitor has two main functions: it filters the output and provides regulator loop stability. The ESR of the output capacitor and the peak−to−peak value of the inductor ripple current are the main factors contributing to the output ripple voltage value. Standard aluminium electrolytics could be adequate for some applications but for quality design, low ESR types are recommended.

An aluminium electrolytic capacitor's ESR value is related to many factors such as the capacitance value, the voltage rating, the physical size and the type of construction. In most cases, the higher voltage electrolytic capacitors have lower ESR value. Often capacitors with much higher voltage ratings may be needed to provide low ESR values that, are required for low output ripple voltage.

#### Feedfoward Capacitor

This capacitor adds lead compensation to the feedback loop and increases the phase margin for better loop stability. For $C_{FF}$ selection, see the design procedure section.

***The Output Capacitor Requires an ESR Value That Has an Upper and Lower Limit***

As mentioned above, a low ESR value is needed for low output ripple voltage, typically 1% to 2% of the output voltage. But if the selected capacitor's ESR is extremely low (below 0.05 Ω), there is a possibility of an unstable feedback loop, resulting in oscillation at the output. This situation can occur when a tantalum capacitor, that can have a very low ESR, is used as the only output capacitor.

***At Low Temperatures, Put in Parallel Aluminium Electrolytic Capacitors with Tantalum Capacitors***

Electrolytic capacitors are not recommended for temperatures below −25°C. The ESR rises dramatically at cold temperatures and typically rises 3 times at −25°C and as much as 10 times at −40°C. Solid tantalum capacitors have much better ESR spec at cold temperatures and are recommended for temperatures below −25°C. They can be also used in parallel with aluminium electrolytics. The value of the tantalum capacitor should be about 10% or 20% of the total capacitance. The output capacitor should have at least 50% higher RMS ripple current rating at 150 kHz than the peak−to−peak inductor ripple current.

#### Catch Diode

***Locate the Catch Diode Close to the LM2594***

The LM2594 is a step−down buck converter; it requires a fast diode to provide a return path for the inductor current when the switch turns off. This diode must be located close to the LM2594 using short leads and short printed circuit traces to avoid EMI problems.

***Use a Schottky or a Soft Switching Ultra−Fast Recovery Diode***

Since the rectifier diodes are very significant sources of losses within switching power supplies, choosing the rectifier that best fits into the converter design is an important process. Schottky diodes provide the best performance because of their fast switching speed and low forward voltage drop.

They provide the best efficiency especially in low output voltage applications (5.0 V and lower). Another choice could be Fast−Recovery, or Ultra−Fast Recovery diodes. It has to be noted, that some types of these diodes with an abrupt turnoff characteristic may cause instability or EMI troubles.

A fast−recovery diode with soft recovery characteristics can better fulfill some quality, low noise design requirements. Table 2 provides a list of suitable diodes for the LM2594 regulator. Standard 50/60 Hz rectifier diodes, such as the 1N4001 series or 1N5400 series are **NOT** suitable.

### Inductor

The magnetic components are the cornerstone of all switching power supply designs. The style of the core and the winding technique used in the magnetic component's design has a great influence on the reliability of the overall power supply.

Using an improper or poorly designed inductor can cause high voltage spikes generated by the rate of transitions in current within the switching power supply, and the possibility of core saturation can arise during an abnormal operational mode. Voltage spikes can cause the semiconductors to enter avalanche breakdown and the part can instantly fail if enough energy is applied. It can also cause significant RFI (Radio Frequency Interference) and EMI (Electro−Magnetic Interference) problems.

#### *Continuous and Discontinuous Mode of Operation*

The LM2594 step−down converter can operate in both the continuous and the discontinuous modes of operation. The regulator works in the continuous mode when loads are relatively heavy, the current flows through the inductor continuously and never falls to zero. Under light load conditions, the circuit will be forced to the discontinuous mode when inductor current falls to zero for certain period of time (see Figure 20 and Figure 21). Each mode has distinctively different operating characteristics, which can affect the regulator performance and requirements. In many cases the preferred mode of operation is the continuous mode. It offers greater output power, lower peak currents in the switch, inductor and diode, and can have a lower output ripple voltage. On the other hand it does require larger inductor values to keep the inductor current flowing continuously, especially at low output load currents and/or high input voltages.

To simplify the inductor selection process, an inductor selection guide for the LM2594 regulator was added to this data sheet (Figure 19). This guide assumes that the regulator is operating in the continuous mode, and selects an inductor that will allow a peak−to−peak inductor ripple current to be a certain percentage of the maximum design load current. This percentage is allowed to change as different design load currents are selected. For light loads (less than approximately 300 mA) it may be desirable to operate the regulator in the discontinuous mode, because the inductor value and size can be kept relatively low. Consequently, the percentage of inductor peak−to−peak current increases. This discontinuous mode of operation is perfectly acceptable for this type of switching converter. Any buck regulator will be forced to enter discontinuous mode if the load current is light enough.

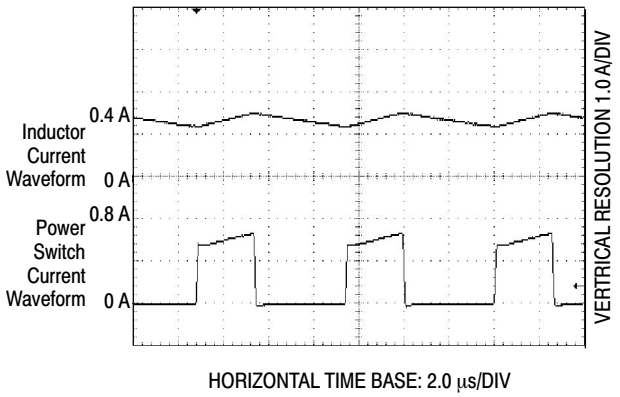


**Figure 20. Continuous Mode Switching Current Waveforms**

#### *Selecting the Right Inductor Style*

Some important considerations when selecting a core type are core material, cost, the output power of the power supply, the physical volume the inductor must fit within, and the amount of EMI (Electro−Magnetic Interference) shielding that the core must provide. The inductor selection guide covers different styles of inductors, such as pot core, E−core, toroid and bobbin core, as well as different core materials such as ferrites and powdered iron from different manufacturers.

For high quality design regulators the toroid core seems to be the best choice. Since the magnetic flux is contained within the core, it generates less EMI, reducing noise problems in sensitive circuits. The least expensive is the bobbin core type, which consists of wire wound on a ferrite rod core. This type of inductor generates more EMI due to the fact that its core is open, and the magnetic flux is not contained within the core.

When multiple switching regulators are located on the same printed circuit board, open core magnetics can cause interference between two or more of the regulator circuits, especially at high currents due to mutual coupling. A toroid, pot core or E−core (closed magnetic structure) should be used in such applications.

#### *Do Not Operate an Inductor Beyond its Maximum Rated Current*

Exceeding an inductor's maximum current rating may cause the inductor to overheat because of the copper wire losses, or the core may saturate. Core saturation occurs when the flux density is too high and consequently the cross sectional area of the core can no longer support additional lines of magnetic flux.

This causes the permeability of the core to drop, the inductance value decreases rapidly and the inductor begins

to look mainly resistive. It has only the DC resistance of the winding. This can cause the switch current to rise very rapidly and force the LM2594 internal switch into cycle−by−cycle current limit, thus reducing the DC output load current. This can also result in overheating of the inductor and/or the LM2594. Different inductor types have different saturation characteristics, and this should be kept in mind when selecting an inductor.

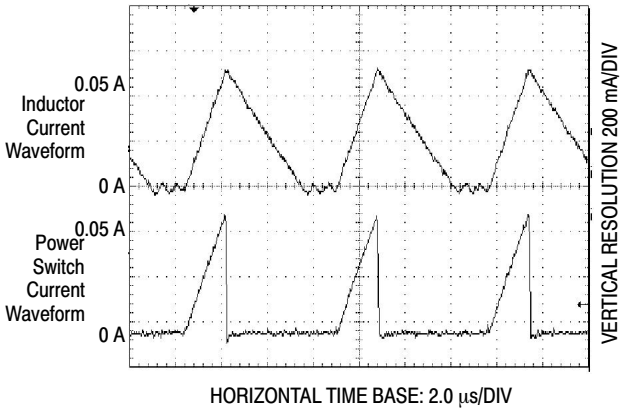


**Figure 21. Discontinuous Mode Switching Current Waveforms**

## GENERAL RECOMMENDATIONS

### Output Voltage Ripple and Transients

#### *Source of the Output Ripple*

Since the LM2594 is a switch mode power supply regulator, its output voltage, if left unfiltered, will contain a sawtooth ripple voltage at the switching frequency. The output ripple voltage value ranges from 0.5% to 3% of the output voltage. It is caused mainly by the inductor sawtooth ripple current multiplied by the ESR of the output capacitor.

#### *Short Voltage Spikes and How to Reduce Them*

The regulator output voltage may also contain short voltage spikes at the peaks of the sawtooth waveform (see Figure 22). These voltage spikes are present because of the fast switching action of the output switch, and the parasitic inductance of the output filter capacitor. There are some other important factors such as wiring inductance, stray capacitance, as well as the scope probe used to evaluate these transients, all these contribute to the amplitude of these spikes. To minimize these voltage spikes, low inductance capacitors should be used, and their lead lengths must be kept short. The importance of quality printed circuit board layout design should also be highlighted.

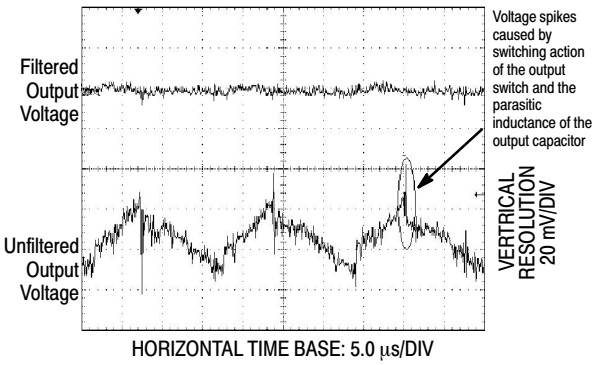


**Figure 22. Output Ripple Voltage Waveforms**

#### *Minimizing the Output Ripple*

In order to minimize the output ripple voltage it is possible to enlarge the inductance value of the inductor L1 and/or to use a larger value output capacitor. There is also another way to smooth the output by means of an additional LC filter (3 μH, 100 μF), that can be added to the output (see Figure 31) to further reduce the amount of output ripple and transients. With such a filter it is possible to reduce the output ripple voltage transients 10 times or more. Figure 22 shows the difference between filtered and unfiltered output waveforms of the regulator shown in Figure 31.

The lower waveform is from the normal unfiltered output of the converter, while the upper waveform shows the output ripple voltage filtered by an additional LC filter.

#### *Heatsinking and Thermal Considerations*

The LM2574 is available in a SOIC−8 package. When used in the typical application the copper lead frame conducts the majority of the heat from the die, through the leads, to the printed circuit copper. The copper and the board are the heatsink for this package and the other heat producing components, such as the catch diode and inductor. For the best thermal performance, wide copper traces should be used and all ground and unused pins should be soldered to generous amounts of printed circuit board copper, such as a ground plane. Large areas of copper provide the best transfer of heat to the surrounding air. One exception to this is the output (switch) pin, which should not have large areas of copper in order to minimize coupling to sensitive circuitry.

Additional improvement in heat dissipation can be achieved even by using of double sided or multilayer boards which can provide even better heat path to the ambient.

Since the current rating of the LM2594 is only 0.5 A, the total package power dissipation for this switcher is quite low, ranging from approximately 0.1 W up to 0.75 W under varying conditions. In a carefully engineered printed circuit board, the through−hole DIP package can easily dissipate up to 0.75 W, even at ambient temperatures of 60°C, and still keep the maximum junction temperature below 125°C.

### *Thermal Analysis and Design*

The following procedure must be performed to determine the operating junction temperature. First determine:

1. $P_{D(max)}$ maximum regulator power dissipation in the application.
2. $T_{A(max)}$ maximum ambient temperature in the application.
3. $T_{J(max)}$ maximum allowed junction temperature (125°C for the LM2594). For a conservative design, the maximum junction temperature should not exceed 110°C to assure safe operation. For every additional +10°C temperature rise that the junction must withstand, the estimated operating lifetime of the component is halved.
4. $R_{\theta JC}$ package thermal resistance junction−case.
5. $R_{\theta JA}$ package thermal resistance junction−ambient.

(Refer to Maximum Ratings on page 3 of this data sheet or $R_{\theta JC}$ and $R_{\theta JA}$ values).

The following formula is to calculate the approximate total power dissipated by the LM2594:

$$P_D = (V_{in} \times I_Q) + d \times I_{Load} \times V_{sat}$$

where d is the duty cycle and for buck converter

$$d = \frac{t_{on}}{T} = \frac{V_O}{V_{in}},$$

$I_Q$ (quiescent current) and $V_{sat}$ can be found in the LM2594 data sheet,
$V_{in}$ is minimum input voltage applied,
$V_O$ is the regulator output voltage,
$I_{Load}$ is the load current.

The dynamic switching losses during turn−on and turn−off can be neglected if proper type catch diode is used.

The junction temperature can be determined by the following expression:

$$T_J = (R_{\theta JA})\ (P_D) + T_A$$

where $(R_{\theta JA})(P_D)$ represents the junction temperature rise caused by the dissipated power and $T_A$ is the maximum ambient temperature.

### *Some Aspects That can Influence Thermal Design*

It should be noted that the package thermal resistance and the junction temperature rise numbers are all approximate, and there are many factors that will affect these numbers, such as PC board size, shape, thickness, physical position, location, board temperature, as well as whether the surrounding air is moving or still.

Other factors are trace width, total printed circuit copper area, copper thickness, single− or double−sided, multilayer board, the amount of solder on the board or even color of the traces.

The size, quantity and spacing of other components on the board can also influence its effectiveness to dissipate the heat.

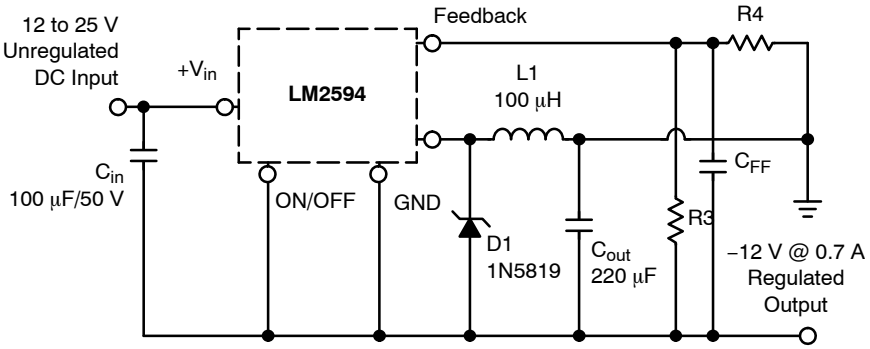


**Figure 23. Inverting Buck−Boost Develops −12 V**

## ADDITIONAL APPLICATIONS

### Inverting Regulator

An inverting buck−boost regulator using the LM2594−ADJ is shown in Figure 23. This circuit converts a positive input voltage to a negative output voltage with a common ground by bootstrapping the regulators ground to the negative output voltage. By grounding the feedback pin, the regulator senses the inverted output voltage and regulates it.

In this example the LM2594 is used to generate a −12 V output. The maximum input voltage in this case cannot exceed +28 V because the maximum voltage appearing across the regulator is the absolute sum of the input and output voltages and this must be limited to a maximum of 40 V.

This circuit configuration is able to deliver approximately 0.25 A to the output when the input voltage is 12 V or higher. At lighter loads the minimum input voltage required drops to approximately 4.7 V, because the buck−boost regulator topology can produce an output voltage that, in its absolute value, is either greater or less than the input voltage.

Since the switch currents in this buck−boost configuration are higher than in the standard buck converter topology, the available output current is lower.

This type of buck−boost inverting regulator can also require a larger amount of startup input current, even for light loads. This may overload an input power source with a current limit less than 1.0 A.

Such an amount of input startup current is needed for at least 2.0 ms or more. The actual time depends on the output voltage and size of the output capacitor.

Because of the relatively high startup currents required by this inverting regulator topology, the use of a delayed startup or an undervoltage lockout circuit is recommended.

Using a delayed startup arrangement, the input capacitor can charge up to a higher voltage before the switch−mode regulator begins to operate.

The high input current needed for startup is now partially supplied by the input capacitor $C_{in}$.

It has been already mentioned above, that in some situations, the delayed startup or the undervoltage lockout features could be very useful. A delayed startup circuit applied to a buck−boost converter is shown in Figure 28. Figure 30 in the “Undervoltage Lockout” section describes an undervoltage lockout feature for the same converter topology.

#### *Design Recommendations:*

The inverting regulator operates in a different manner than the buck converter and so a different design procedure has to be used to select the inductor L1 or the output capacitor $C_{out}$.

The output capacitor values must be larger than what is normally required for buck converter designs. Low input voltages or high output currents require a large value output capacitor (in the range of thousands of μF).

The recommended range of inductor values for the inverting converter design is between 68 μH and 220 μH. To select an inductor with an appropriate current rating, the inductor peak current has to be calculated.

The following formula is used to obtain the peak inductor current:

$$I_{peak} \approx \frac{I_{Load}\,(V_{in} + |V_O|)}{V_{in}} + \frac{V_{in} \times t_{on}}{2L_1}$$

$$\text{where } t_{on} = \frac{|V_O|}{V_{in} + |V_O|} \times \frac{1.0}{f_{osc}}, \text{ and } f_{osc} = 150 \text{ kHz}$$

Under normal continuous inductor current operating conditions, the worst case occurs when $V_{in}$ is minimal.

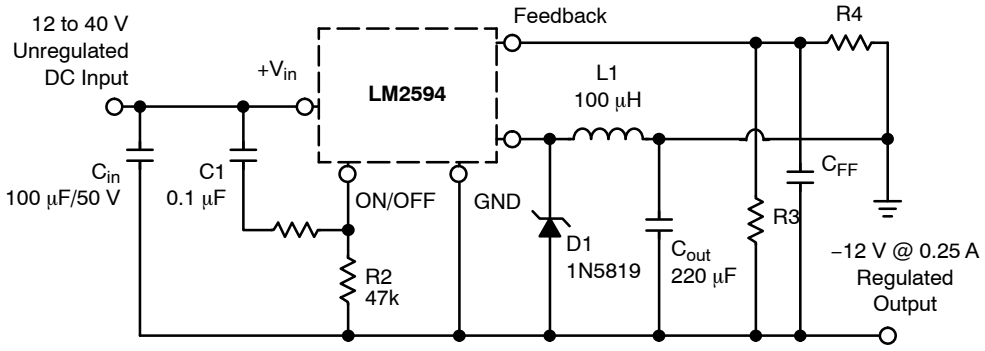


**Figure 24. Inverting Buck−Boost Develops with Delayed Startup**

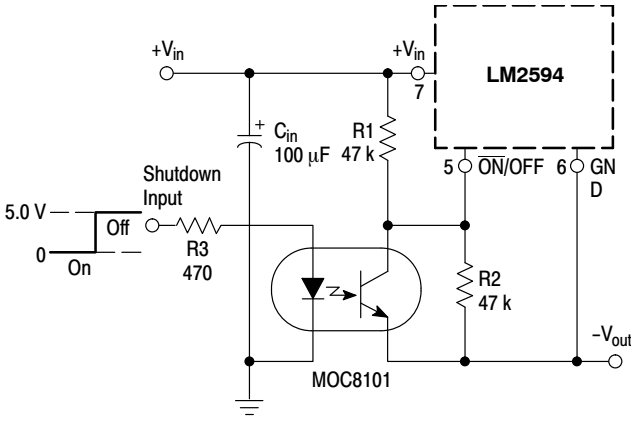


NOTE: This picture does not show the complete circuit.

**Figure 25. Inverting Buck−Boost Regulator Shutdown Circuit Using an Optocoupler**

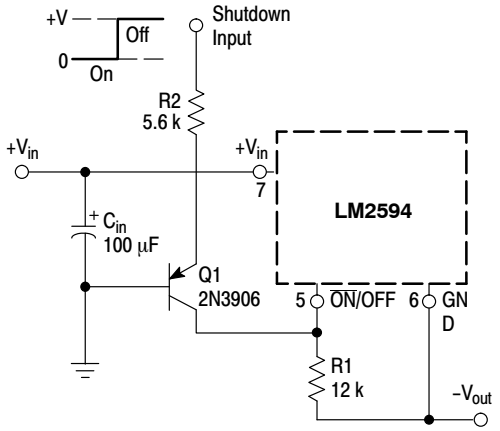


NOTE: This picture does not show the complete circuit.

**Figure 26. Inverting Buck−Boost Regulator Shutdown Circuit Using a PNP Transistor**

With the inverting configuration, the use of the $\overline{ON}$/OFF pin requires some level shifting techniques. This is caused by the fact, that the ground pin of the converter IC is no longer at ground. Now, the $\overline{ON}$/OFF pin threshold voltage (1.3 V approximately) has to be related to the negative output voltage level. There are many different possible shut down methods, two of them are shown in Figures 25 and 26.

### Negative Boost Regulator

This example is a variation of the buck−boost topology and it is called negative boost regulator. This regulator experiences relatively high switch current, especially at low input voltages. The internal switch current limiting results in lower output load current capability.

The circuit in Figure 27 shows the negative boost configuration. The input voltage in this application ranges from −5.0 V to −12 V and provides a regulated −12 V output. If the input voltage is greater than −12 V, the output will rise above −12 V accordingly, but will not damage the regulator.

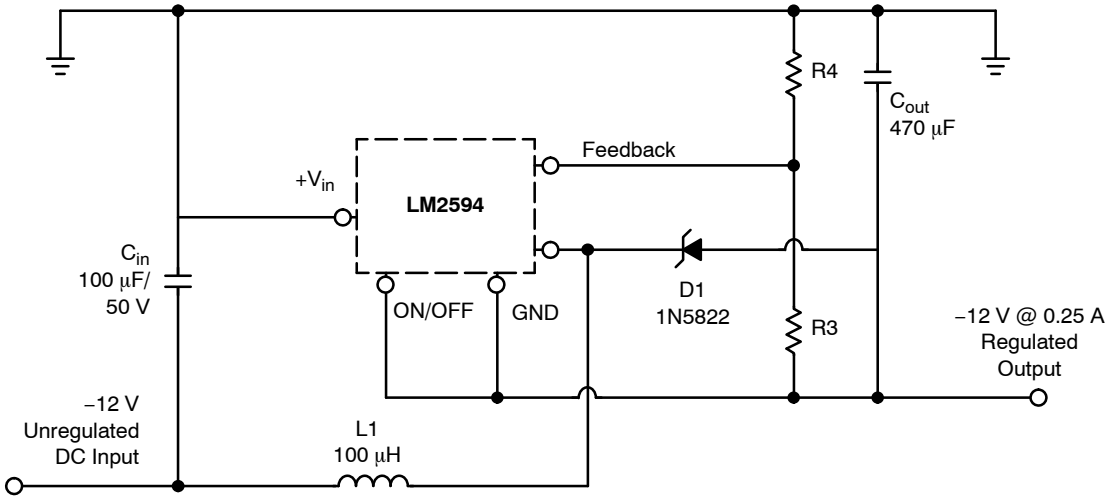


**Figure 27. Negative Boost Regulator**

***Design Recommendations:***

The same design rules as for the previous inverting buck−boost converter can be applied. The output capacitor $C_{out}$ must be chosen larger than would be required for a what standard buck converter. Low input voltages or high output currents require a large value output capacitor (in the range of thousands of μF). The recommended range of inductor values for the negative boost regulator is the same as for inverting converter design.

Another important point is that these negative boost converters cannot provide current limiting load protection in the event of a short in the output so some other means, such as a fuse, may be necessary to provide the load protection.

### Delayed Startup

There are some applications, like the inverting regulator already mentioned above, which require a higher amount of startup current. In such cases, if the input power source is limited, this delayed startup feature becomes very useful.

To provide a time delay between the time when the input voltage is applied and the time when the output voltage comes up, the circuit in Figure 28 can be used. As the input voltage is applied, the capacitor C1 charges up, and the voltage across the resistor R2 falls down. When the voltage on the $\overline{ON}$/OFF pin falls below the threshold value 1.3 V, the regulator starts up. Resistor R1 is included to limit the maximum voltage applied to the $\overline{ON}$/OFF pin. It reduces the power supply noise sensitivity, and also limits the capacitor C1 discharge current, but its use is not mandatory.

When a high 50 Hz or 60 Hz (100 Hz or 120 Hz respectively) ripple voltage exists, a long delay time can cause some problems by coupling the ripple into the $\overline{ON}$/OFF pin, the regulator could be switched periodically on and off with the line (or double) frequency.

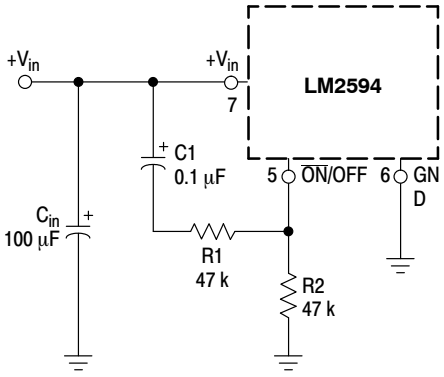


NOTE: This picture does not show the complete circuit.

**Figure 28. Delayed Startup Circuitry**

### Undervoltage Lockout

Some applications require the regulator to remain off until the input voltage reaches a certain threshold level. Figure 29 shows an undervoltage lockout circuit applied to a buck regulator. A version of this circuit for buck−boost converter is shown in Figure 30. Resistor R3 pulls the $\overline{ON}$/OFF pin high and keeps the regulator off until the input voltage reaches a predetermined threshold level with respect to the ground Pin 3, which is determined by the following expression:

$$V_{th} \approx V_{Z1} + \left(1.0 + \frac{R2}{R1}\right) V_{BE}\ (Q1)$$

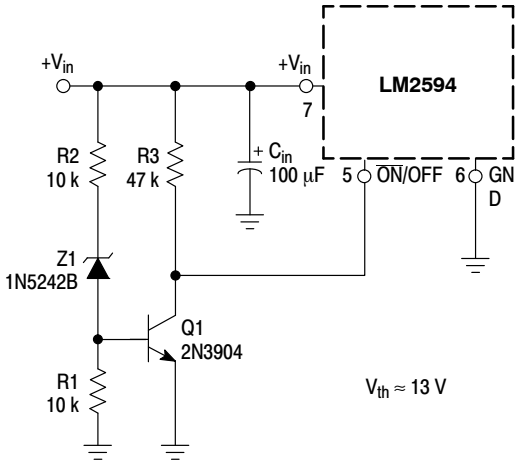


NOTE: This picture does not show the complete circuit.

**Figure 29. Undervoltage Lockout Circuit for Buck Converter**

The following formula is used to obtain the peak inductor current:

$$I_{peak} \approx \frac{I_{Load}\,(V_{in} + |V_O|)}{V_{in}} + \frac{V_{in} \times t_{on}}{2L_1}$$

$$\text{where } t_{on} = \frac{|V_O|}{V_{in} + |V_O|} \times \frac{1.0}{f_{osc}}, \text{ and } f_{osc} = 150\ \text{kHz}$$

Under normal continuous inductor current operating conditions, the worst case occurs when $V_{in}$ is minimal.

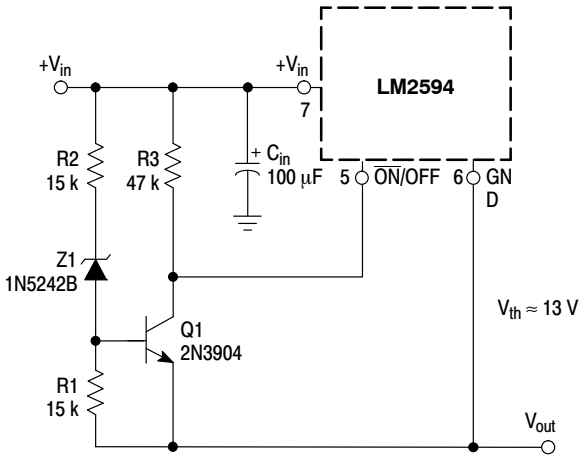


NOTE: This picture does not show the complete circuit.

**Figure 30. Undervoltage Lockout Circuit for Buck−Boost Converter**

### Adjustable Output, Low−Ripple Power Supply

A 0.5 A output current capability power supply that features an adjustable output voltage is shown in Figure 31.

This regulator delivers 0.5 A into 1.2 V to 35 V output. The input voltage ranges from roughly 3.0 V to 40 V. In order to achieve a 10 or more times reduction of output ripple, an additional L−C filter is included in this circuit.

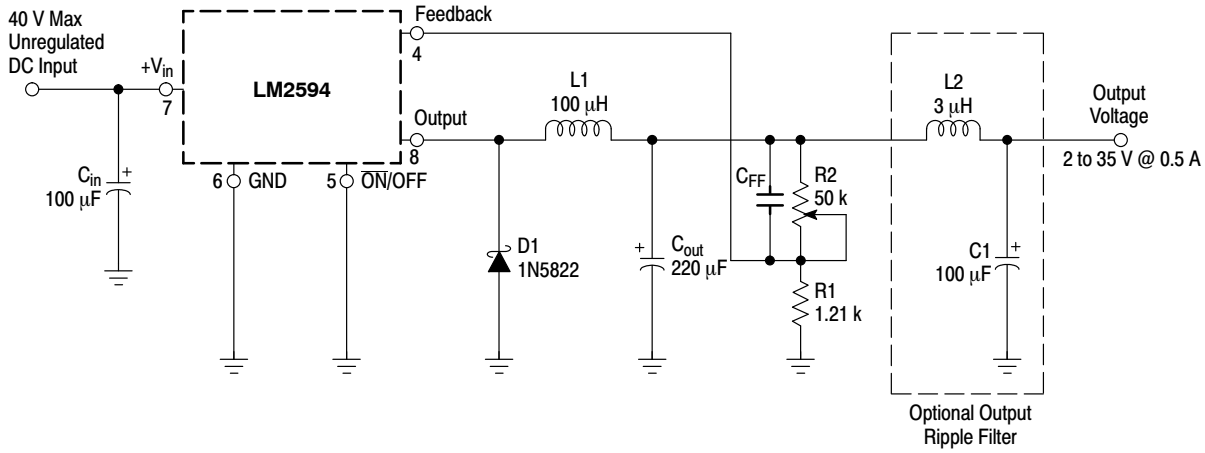


**Figure 31. 2 to 35 V Adjustable 0.5 A Power Supply with Low Output Ripple**

**THE LM2594 STEP−DOWN VOLTAGE REGULATOR WITH 5.0 V @ 0.5 A OUTPUT POWER CAPABILITY. TYPICAL APPLICATION WITH THROUGH−HOLE PC BOARD LAYOUT**

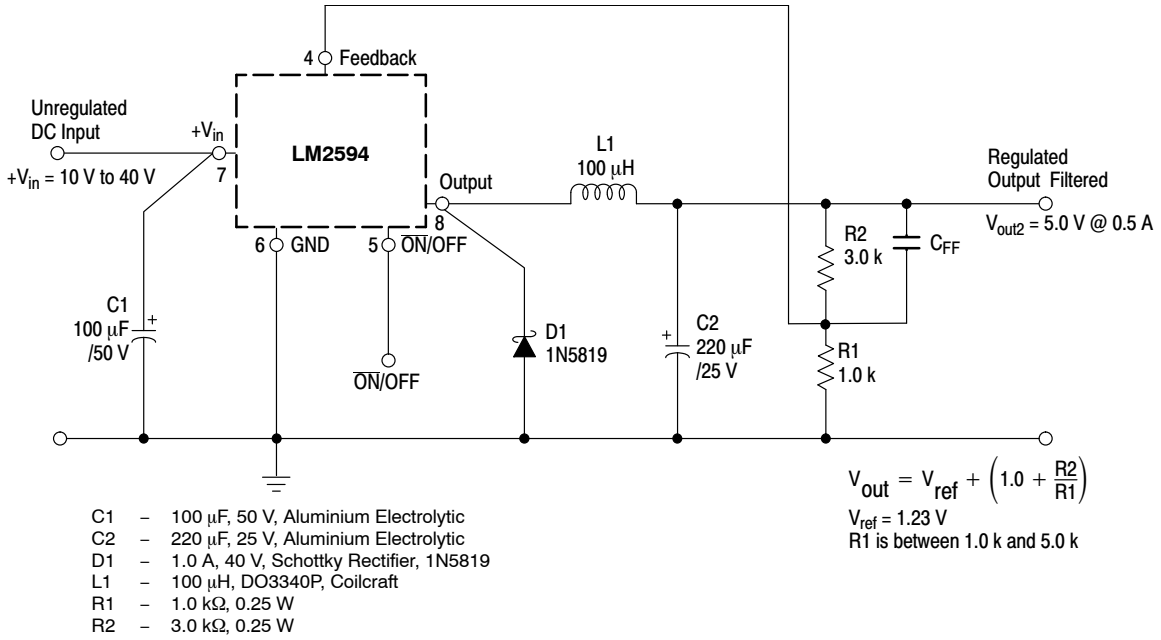


C1 – 100 μF, 50 V, Aluminium Electrolytic
C2 – 220 μF, 25 V, Aluminium Electrolytic
D1 – 1.0 A, 40 V, Schottky Rectifier, 1N5819
L1 – 100 μH, DO3340P, Coilcraft
R1 – 1.0 kΩ, 0.25 W
R2 – 3.0 kΩ, 0.25 W

**Figure 32. Schematic Diagram of the 5.0 V @ 0.5 A Step−Down Converter Using the LM2594−ADJ**

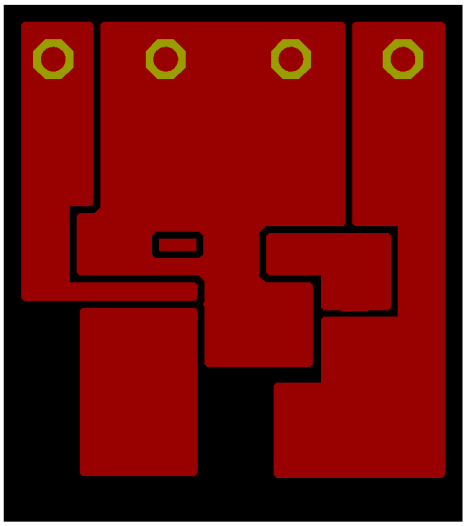

NOTE: Not to scale.

**Figure 33. Printed Circuit Board Layout With Component**

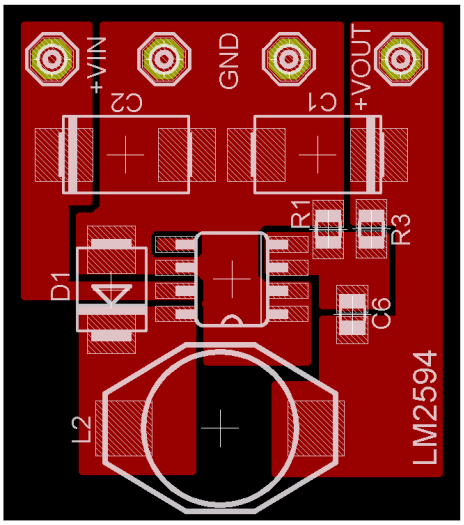


NOTE: Not to scale.

**Figure 34. Printed Circuit Board Layout Copper Side**

**References**

- National Semiconductor LM2594 Data Sheet and Application Note
- National Semiconductor LM2595 Data Sheet and Application Note
- Marty Brown “Practical Switching Power Supply Design”, Academic Press, Inc., San Diego 1990
- Ray Ridley “High Frequency Magnetics Design”, Ridley Engineering, Inc. 1995

# MECHANICAL CASE OUTLINE
## PACKAGE DIMENSIONS



**SCALE 1:1**

**SOIC−8 NB**
CASE 751−07
ISSUE AK

DATE 16 FEB 2011

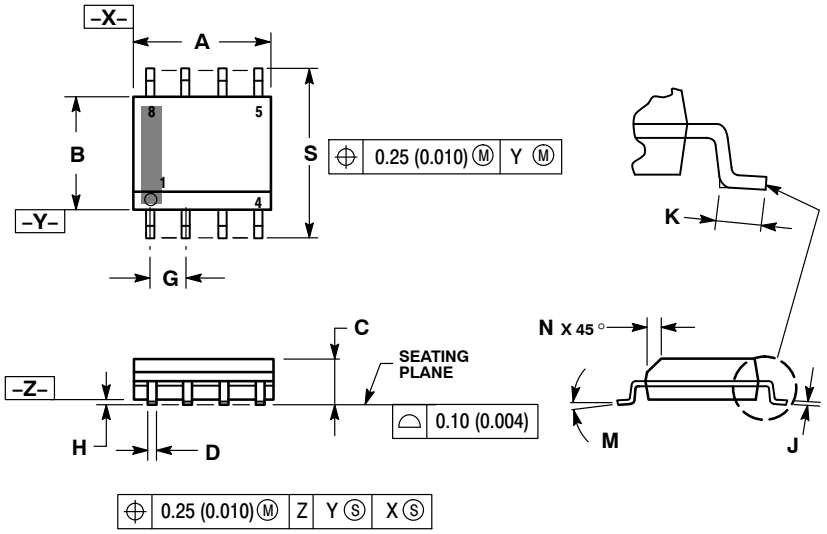


NOTES:
1. DIMENSIONING AND TOLERANCING PER ANSI Y14.5M, 1982.
2. CONTROLLING DIMENSION: MILLIMETER.
3. DIMENSION A AND B DO NOT INCLUDE MOLD PROTRUSION.
4. MAXIMUM MOLD PROTRUSION 0.15 (0.006) PER SIDE.
5. DIMENSION D DOES NOT INCLUDE DAMBAR PROTRUSION. ALLOWABLE DAMBAR PROTRUSION SHALL BE 0.127 (0.005) TOTAL IN EXCESS OF THE D DIMENSION AT MAXIMUM MATERIAL CONDITION.
6. 751−01 THRU 751−06 ARE OBSOLETE. NEW STANDARD IS 751−07.

| | MILLIMETERS | | INCHES | |
|---|---|---|---|---|
| DIM | MIN | MAX | MIN | MAX |
| A | 4.80 | 5.00 | 0.189 | 0.197 |
| B | 3.80 | 4.00 | 0.150 | 0.157 |
| C | 1.35 | 1.75 | 0.053 | 0.069 |
| D | 0.33 | 0.51 | 0.013 | 0.020 |
| G | 1.27 BSC | | 0.050 BSC | |
| H | 0.10 | 0.25 | 0.004 | 0.010 |
| J | 0.19 | 0.25 | 0.007 | 0.010 |
| K | 0.40 | 1.27 | 0.016 | 0.050 |
| M | 0 ° | 8 ° | 0 ° | 8 ° |
| N | 0.25 | 0.50 | 0.010 | 0.020 |
| S | 5.80 | 6.20 | 0.228 | 0.244 |

### SOLDERING FOOTPRINT*

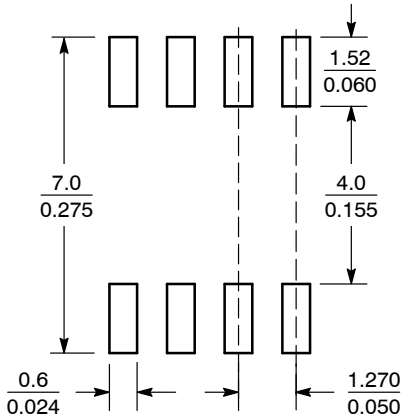


SCALE 6:1 (mm / inches)

*For additional information on our Pb−Free strategy and soldering details, please download the ON Semiconductor Soldering and Mounting Techniques Reference Manual, SOLDERRM/D.

### GENERIC MARKING DIAGRAM*

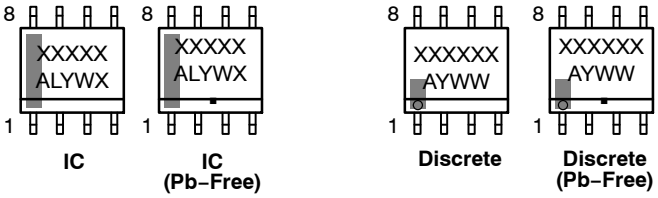


IC | IC (Pb−Free) | Discrete | Discrete (Pb−Free)

XXXXX = Specific Device Code
A = Assembly Location
L = Wafer Lot
Y = Year
W = Work Week
▪ = Pb−Free Package

XXXXXX = Specific Device Code
A = Assembly Location
Y = Year
WW = Work Week
▪ = Pb−Free Package

*This information is generic. Please refer to device data sheet for actual part marking. Pb−Free indicator, "G" or microdot "▪", may or may not be present. Some products may not follow the Generic Marking.

**STYLES ON PAGE 2**

| | | |
|---|---|---|
| **DOCUMENT NUMBER:** | **98ASB42564B** | Electronic versions are uncontrolled except when accessed directly from the Document Repository. Printed versions are uncontrolled except when stamped "CONTROLLED COPY" in red. |
| **DESCRIPTION:** | **SOIC−8 NB** | **PAGE 1 OF 2** |

**onsemi** and onsemi are trademarks of Semiconductor Components Industries, LLC dba **onsemi** or its subsidiaries in the United States and/or other countries. **onsemi** reserves the right to make changes without further notice to any products herein. **onsemi** makes no warranty, representation or guarantee regarding the suitability of its products for any particular purpose, nor does **onsemi** assume any liability arising out of the application or use of any product or circuit, and specifically disclaims any and all liability, including without limitation special, consequential or incidental damages. **onsemi** does not convey any license under its patent rights nor the rights of others.

© Semiconductor Components Industries, LLC, 2019

**SOIC−8 NB**
CASE 751−07
ISSUE AK

DATE 16 FEB 2011

STYLE 1:
PIN 1. EMITTER
2. COLLECTOR
3. COLLECTOR
4. EMITTER
5. EMITTER
6. BASE
7. BASE
8. EMITTER

STYLE 2:
PIN 1. COLLECTOR, DIE, #1
2. COLLECTOR, #1
3. COLLECTOR, #2
4. COLLECTOR, #2
5. BASE, #2
6. EMITTER, #2
7. BASE, #1
8. EMITTER, #1

STYLE 3:
PIN 1. DRAIN, DIE #1
2. DRAIN, #1
3. DRAIN, #2
4. DRAIN, #2
5. GATE, #2
6. SOURCE, #2
7. GATE, #1
8. SOURCE, #1

STYLE 4:
PIN 1. ANODE
2. ANODE
3. ANODE
4. ANODE
5. ANODE
6. ANODE
7. ANODE
8. COMMON CATHODE

STYLE 5:
PIN 1. DRAIN
2. DRAIN
3. DRAIN
4. DRAIN
5. GATE
6. GATE
7. SOURCE
8. SOURCE

STYLE 6:
PIN 1. SOURCE
2. DRAIN
3. DRAIN
4. SOURCE
5. SOURCE
6. GATE
7. GATE
8. SOURCE

STYLE 7:
PIN 1. INPUT
2. EXTERNAL BYPASS
3. THIRD STAGE SOURCE
4. GROUND
5. DRAIN
6. GATE 3
7. SECOND STAGE Vd
8. FIRST STAGE Vd

STYLE 8:
PIN 1. COLLECTOR, DIE #1
2. BASE, #1
3. BASE, #2
4. COLLECTOR, #2
5. COLLECTOR, #2
6. EMITTER, #2
7. EMITTER, #1
8. COLLECTOR, #1

STYLE 9:
PIN 1. EMITTER, COMMON
2. COLLECTOR, DIE #1
3. COLLECTOR, DIE #2
4. EMITTER, COMMON
5. EMITTER, COMMON
6. BASE, DIE #2
7. BASE, DIE #1
8. EMITTER, COMMON

STYLE 10:
PIN 1. GROUND
2. BIAS 1
3. OUTPUT
4. GROUND
5. GROUND
6. BIAS 2
7. INPUT
8. GROUND

STYLE 11:
PIN 1. SOURCE 1
2. GATE 1
3. SOURCE 2
4. GATE 2
5. DRAIN 2
6. DRAIN 2
7. DRAIN 1
8. DRAIN 1

STYLE 12:
PIN 1. SOURCE
2. SOURCE
3. SOURCE
4. GATE
5. DRAIN
6. DRAIN
7. DRAIN
8. DRAIN

STYLE 13:
PIN 1. N.C.
2. SOURCE
3. SOURCE
4. GATE
5. DRAIN
6. DRAIN
7. DRAIN
8. DRAIN

STYLE 14:
PIN 1. N−SOURCE
2. N−GATE
3. P−SOURCE
4. P−GATE
5. P−DRAIN
6. P−DRAIN
7. N−DRAIN
8. N−DRAIN

STYLE 15:
PIN 1. ANODE 1
2. ANODE 1
3. ANODE 1
4. ANODE 1
5. CATHODE, COMMON
6. CATHODE, COMMON
7. CATHODE, COMMON
8. CATHODE, COMMON

STYLE 16:
PIN 1. EMITTER, DIE #1
2. BASE, DIE #1
3. EMITTER, DIE #2
4. BASE, DIE #2
5. COLLECTOR, DIE #2
6. COLLECTOR, DIE #2
7. COLLECTOR, DIE #1
8. COLLECTOR, DIE #1

STYLE 17:
PIN 1. VCC
2. V2OUT
3. V1OUT
4. TXE
5. RXE
6. VEE
7. GND
8. ACC

STYLE 18:
PIN 1. ANODE
2. ANODE
3. SOURCE
4. GATE
5. DRAIN
6. DRAIN
7. CATHODE
8. CATHODE

STYLE 19:
PIN 1. SOURCE 1
2. GATE 1
3. SOURCE 2
4. GATE 2
5. DRAIN 2
6. MIRROR 2
7. DRAIN 1
8. MIRROR 1

STYLE 20:
PIN 1. SOURCE (N)
2. GATE (N)
3. SOURCE (P)
4. GATE (P)
5. DRAIN
6. DRAIN
7. DRAIN
8. DRAIN

STYLE 21:
PIN 1. CATHODE 1
2. CATHODE 2
3. CATHODE 3
4. CATHODE 4
5. CATHODE 5
6. COMMON ANODE
7. COMMON ANODE
8. CATHODE 6

STYLE 22:
PIN 1. I/O LINE 1
2. COMMON CATHODE/VCC
3. COMMON CATHODE/VCC
4. I/O LINE 3
5. COMMON ANODE/GND
6. I/O LINE 4
7. I/O LINE 5
8. COMMON ANODE/GND

STYLE 23:
PIN 1. LINE 1 IN
2. COMMON ANODE/GND
3. COMMON ANODE/GND
4. LINE 2 IN
5. LINE 2 OUT
6. COMMON ANODE/GND
7. COMMON ANODE/GND
8. LINE 1 OUT

STYLE 24:
PIN 1. BASE
2. EMITTER
3. COLLECTOR/ANODE
4. COLLECTOR/ANODE
5. CATHODE
6. CATHODE
7. COLLECTOR/ANODE
8. COLLECTOR/ANODE

STYLE 25:
PIN 1. VIN
2. N/C
3. REXT
4. GND
5. IOUT
6. IOUT
7. IOUT
8. IOUT

STYLE 26:
PIN 1. GND
2. dv/dt
3. ENABLE
4. ILIMIT
5. SOURCE
6. SOURCE
7. SOURCE
8. VCC

STYLE 27:
PIN 1. ILIMIT
2. OVLO
3. UVLO
4. INPUT+
5. SOURCE
6. SOURCE
7. SOURCE
8. DRAIN

STYLE 28:
PIN 1. SW_TO_GND
2. DASIC_OFF
3. DASIC_SW_DET
4. GND
5. V_MON
6. VBULK
7. VBULK
8. VIN

STYLE 29:
PIN 1. BASE, DIE #1
2. EMITTER, #1
3. BASE, #2
4. EMITTER, #2
5. COLLECTOR, #2
6. COLLECTOR, #2
7. COLLECTOR, #1
8. COLLECTOR, #1

STYLE 30:
PIN 1. DRAIN 1
2. DRAIN 1
3. GATE 2
4. SOURCE 2
5. SOURCE 1/DRAIN 2
6. SOURCE 1/DRAIN 2
7. SOURCE 1/DRAIN 2
8. GATE 1

| | | | |
|---|---|---|---|
| **DOCUMENT NUMBER:** | **98ASB42564B** | Electronic versions are uncontrolled except when accessed directly from the Document Repository. Printed versions are uncontrolled except when stamped "CONTROLLED COPY" in red. | |
| **DESCRIPTION:** | **SOIC−8 NB** | | **PAGE 2 OF 2** |

**onsemi** and ONSEMI. are trademarks of Semiconductor Components Industries, LLC dba **onsemi** or its subsidiaries in the United States and/or other countries. **onsemi** reserves the right to make changes without further notice to any products herein. **onsemi** makes no warranty, representation or guarantee regarding the suitability of its products for any particular purpose, nor does **onsemi** assume any liability arising out of the application or use of any product or circuit, and specifically disclaims any and all liability, including without limitation special, consequential or incidental damages. **onsemi** does not convey any license under its patent rights nor the rights of others.

© Semiconductor Components Industries, LLC, 2019

**onsemi**, , and other names, marks, and brands are registered and/or common law trademarks of Semiconductor Components Industries, LLC dba "**onsemi**" or its affiliates and/or subsidiaries in the United States and/or other countries. **onsemi** owns the rights to a number of patents, trademarks, copyrights, trade secrets, and other intellectual property. A listing of **onsemi**'s product/patent coverage may be accessed at www.onsemi.com/site/pdf/Patent−Marking.pdf. **onsemi** reserves the right to make changes at any time to any products or information herein, without notice. The information herein is provided "as−is" and **onsemi** makes no warranty, representation or guarantee regarding the accuracy of the information, product features, availability, functionality, or suitability of its products for any particular purpose, nor does **onsemi** assume any liability arising out of the application or use of any product or circuit, and specifically disclaims any and all liability, including without limitation special, consequential or incidental damages. Buyer is responsible for its products and applications using **onsemi** products, including compliance with all laws, regulations and safety requirements or standards, regardless of any support or applications information provided by **onsemi**. "Typical" parameters which may be provided in **onsemi** data sheets and/or specifications can and do vary in different applications and actual performance may vary over time. All operating parameters, including "Typicals" must be validated for each customer application by customer's technical experts. **onsemi** does not convey any license under any of its intellectual property rights nor the rights of others. **onsemi** products are not designed, intended, or authorized for use as a critical component in life support systems or any FDA Class 3 medical devices or medical devices with a same or similar classification in a foreign jurisdiction or any devices intended for implantation in the human body. Should Buyer purchase or use **onsemi** products for any such unintended or unauthorized application, Buyer shall indemnify and hold **onsemi** and its officers, employees, subsidiaries, affiliates, and distributors harmless against all claims, costs, damages, and expenses, and reasonable attorney fees arising out of, directly or indirectly, any claim of personal injury or death associated with such unintended or unauthorized use, even if such claim alleges that **onsemi** was negligent regarding the design or manufacture of the part. **onsemi** is an Equal Opportunity/Affirmative Action Employer. This literature is subject to all applicable copyright laws and is not for resale in any manner.

## ADDITIONAL INFORMATION

**TECHNICAL PUBLICATIONS**:
**Technical Library:** www.onsemi.com/design/resources/technical−documentation
**onsemi Website:** www.onsemi.com

**ONLINE SUPPORT**: www.onsemi.com/support
**For additional information, please contact your local Sales Representative at** www.onsemi.com/support/sales