3.0 A, Step-Down Switching Regulator

LM2596

The LM2596 regulator is monolithic integrated circuit ideally suited for easy and convenient design of a step−down switching regulator (buck converter). It is capable of driving a 3.0 A load with excellent line and load regulation. This device is available in adjustable output version and it is internally compensated to minimize the number of external components to simplify the power supply design.

Since LM2596 converter is a switch−mode power supply, its efficiency is significantly higher in comparison with popular three−terminal linear regulators, especially with higher input voltages.

The LM2596 operates at a switching frequency of 150 kHz thus allowing smaller sized filter components than what would be needed with lower frequency switching regulators. Available in a standard 5−lead TO−220 package with several different lead bend options, and D^2PAK surface mount package.

The other features include a guaranteed ±4% tolerance on output voltage within specified input voltages and output load conditions, and ±15% on the oscillator frequency. External shutdown is included, featuring 80 μA (typical) standby current. Self protection features include switch cycle−by−cycle current limit for the output switch, as well as thermal shutdown for complete protection under fault conditions.

Features

- Adjustable Output Voltage Range 1.23 V – 37 V
- Guaranteed 3.0 A Output Load Current
- Wide Input Voltage Range up to 40 V
- 150 kHz Fixed Frequency Internal Oscillator
- TTL Shutdown Capability
- Low Power Standby Mode, typ 80 μA
- Thermal Shutdown and Current Limit Protection
- Internal Loop Compensation
- Moisture Sensitivity Level (MSL) Equals 1
- These Devices are Pb−Free

Applications

- Simple High−Efficiency Step−Down (Buck) Regulator
- Efficient Pre−Regulator for Linear Regulators
- On−Card Switching Regulators
- Positive to Negative Converter (Buck−Boost)
- Negative Step−Up Converters
- Power Supply for Battery Chargers

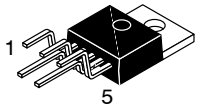

TO−220
TV SUFFIX
CASE 314B

Heatsink surface connected to Pin 3

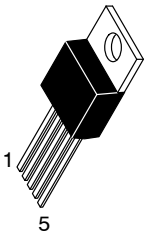

TO−220
T SUFFIX
CASE 314D

Pin
1. V_{in}
2. Output
3. Ground
4. Feedback
5. $\overline{ON}$/OFF

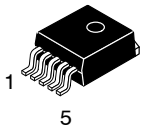

D^2PAK
D2T SUFFIX
CASE 936A

Heatsink surface (shown as terminal 6 in case outline drawing) is connected to Pin 3

MARKING DIAGRAMS

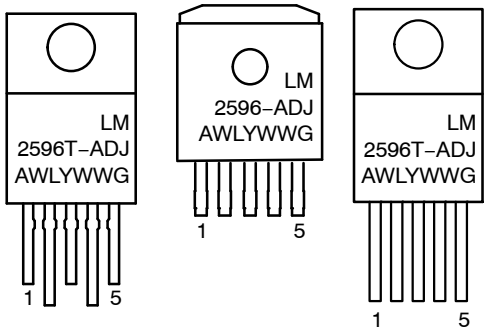

A = Assembly Location
WL = Wafer Lot
Y = Year
WW = Work Week
G = Pb−Free Package

ORDERING INFORMATION

See detailed ordering and shipping information in the package dimensions section on page 23 of this data sheet.

© Semiconductor Components Industries, LLC, 2008

Typical Application (Adjustable Output Voltage Version)

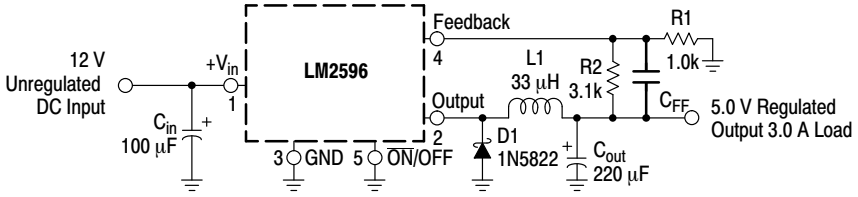

Block Diagram

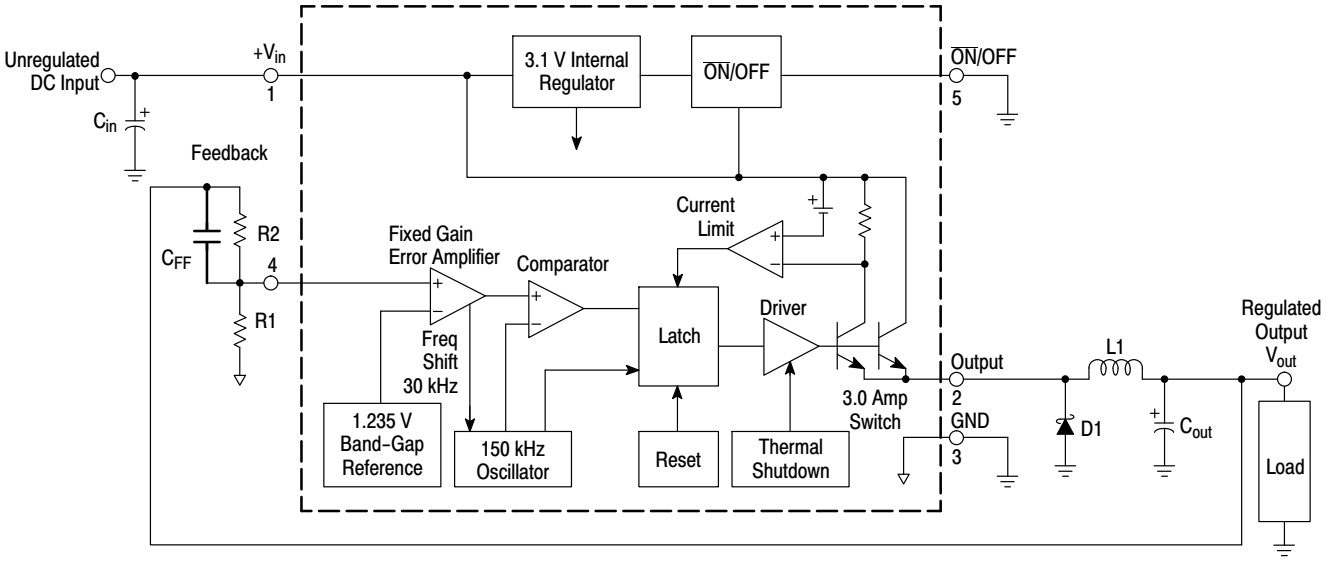

Figure 1. Typical Application and Internal Block Diagram

MAXIMUM RATINGS

Rating	Symbol	Value	Unit
Maximum Supply Voltage	V_{in}	45	V
$\overline{ON}$/OFF Pin Input Voltage	–	$-0.3\ V \le V \le +V_{in}$	V
Output Voltage to Ground (Steady−State)	–	−1.0	V
Power Dissipation			
Case 314B and 314D (TO−220, 5−Lead)	P_D	Internally Limited	W
Thermal Resistance, Junction−to−Ambient	$R_{\theta JA}$	65	°C/W
Thermal Resistance, Junction−to−Case	$R_{\theta JC}$	5.0	°C/W
Case 936A (D^2PAK)	P_D	Internally Limited	W
Thermal Resistance, Junction−to−Ambient	$R_{\theta JA}$	70	°C/W
Thermal Resistance, Junction−to−Case	$R_{\theta JC}$	5.0	°C/W
Storage Temperature Range	T_{stg}	−65 to +150	°C
Minimum ESD Rating (Human Body Model: C = 100 pF, R = 1.5 kΩ)	–	2.0	kV
Lead Temperature (Soldering, 10 seconds)	–	260	°C
Maximum Junction Temperature	T_J	150	°C

Stresses exceeding those listed in the Maximum Ratings table may damage the device. If any of these limits are exceeded, device functionality should not be assumed, damage may occur and reliability may be affected.

PIN FUNCTION DESCRIPTION

Pin	Symbol	Description (Refer to Figure 1)
1	V_{in}	This pin is the positive input supply for the LM2596 step−down switching regulator. In order to minimize voltage transients and to supply the switching currents needed by the regulator, a suitable input bypass capacitor must be present (C_{in} in Figure 1).
2	Output	This is the emitter of the internal switch. The saturation voltage V_{sat} of this output switch is typically 1.5 V. It should be kept in mind that the PCB area connected to this pin should be kept to a minimum in order to minimize coupling to sensitive circuitry.
3	GND	Circuit ground pin. See the information about the printed circuit board layout.
4	Feedback	This pin is the direct input of the error amplifier and the resistor network R2, R1 is connected externally to allow programming of the output voltage.
5	$\overline{ON}$/OFF	It allows the switching regulator circuit to be shut down using logic level signals, thus dropping the total input supply current to approximately 80 μA. The threshold voltage is typically 1.6 V. Applying a voltage above this value (up to $+V_{in}$) shuts the regulator off. If the voltage applied to this pin is lower than 1.6 V or if this pin is left open, the regulator will be in the “on” condition.

OPERATING RATINGS (Operating Ratings indicate conditions for which the device is intended to be functional, but do not guarantee specific performance limits. For guaranteed specifications and test conditions, see the Electrical Characteristics.)

Rating	Symbol	Value	Unit
Operating Junction Temperature Range	T_J	−40 to +125	°C
Supply Voltage	V_{in}	4.5 to 40	V

SYSTEM PARAMETERS

ELECTRICAL CHARACTERISTICS Specifications with standard type face are for T_J = 25°C, and those with boldface type apply over full Operating Temperature Range −40°C to +125°C

Characteristics	Symbol	Min	Typ	Max	Unit
LM2596 (Note 1, Test Circuit Figure 15)					
Feedback Voltage (V_{in} = 12 V, I_{Load} = 0.5 A, V_{out} = 5.0 V,)	V_{FB_nom}		1.23		V
Feedback Voltage (8.5 V ≤ V_{in} ≤ 40 V, 0.5 A ≤ I_{Load} ≤ 3.0 A, V_{out} = 5.0 V)	V_{FB}	1.193 **1.18**		1.267 **1.28**	V
Efficiency (V_{in} = 12 V, I_{Load} = 3.0 A, V_{out} = 5.0 V)	η	–	73	–	%
Feedback Bias Current (V_{out} = 5.0 V)	I_b		25	100 **200**	nA
Oscillator Frequency (Note 2)	f_{osc}	135 **120**	150	165 **180**	kHz
Saturation Voltage (I_{out} = 3.0 A, Notes 3 and 4)	V_{sat}		1.5	1.8 **2.0**	V
Max Duty Cycle “ON” (Note 4)	DC		95		%
Current Limit (Peak Current, Notes 2 and 3)	I_{CL}	4.2 **3.5**	5.6	6.9 **7.5**	A
Output Leakage Current (Notes 5 and 6) Output = 0 V Output = −1.0 V	I_L		 0.5 6.0	 2.0 20	mA
Quiescent Current (Note 5)	I_Q		5.0	10	mA
Standby Quiescent Current ($\overline{ON}$/OFF Pin = 5.0 V (“OFF”)) (Note 6)	I_{stby}		80	200 **250**	μA
$\overline{ON}$/OFF PIN LOGIC INPUT					
Threshold Voltage			1.6		V
V_{out} = 0 V (Regulator OFF)	V_{IH}	2.2 **2.4**			V
V_{out} = Nominal Output Voltage (Regulator ON)	V_{IL}			1.0 **0.8**	V
$\overline{ON}$/OFF Pin Input Current					
$\overline{ON}$/OFF Pin = 5.0 V (Regulator OFF)	I_{IH}	–	15	30	μA
$\overline{ON}$/OFF Pin = 0 V (regulator ON)	I_{IL}	–	0.01	5.0	μA

1. External components such as the catch diode, inductor, input and output capacitors can affect switching regulator system performance. When the LM2596 is used as shown in the Figure 15 test circuit, system performance will be as shown in system parameters section.
2. The oscillator frequency reduces to approximately 30 kHz in the event of an output short or an overload which causes the regulated output voltage to drop approximately 40% from the nominal output voltage. This self protection feature lowers the average dissipation of the IC by lowering the minimum duty cycle from 5% down to approximately 2%.
3. No diode, inductor or capacitor connected to output (Pin 2) sourcing the current.
4. Feedback (Pin 4) removed from output and connected to 0 V.
5. Feedback (Pin 4) removed from output and connected to +12 V to force the output transistor “off”.
6. V_{in} = 40 V.

TYPICAL PERFORMANCE CHARACTERISTICS (Circuit of Figure 15)

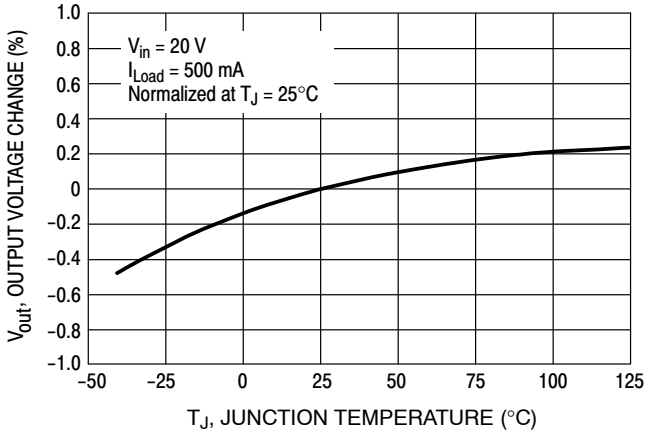

Figure 2. Normalized Output Voltage

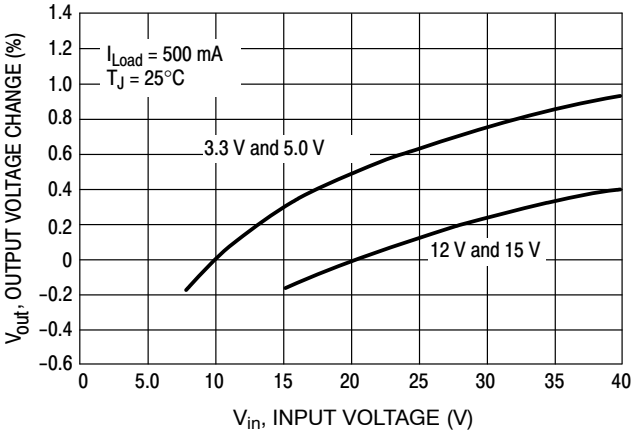

Figure 3. Line Regulation

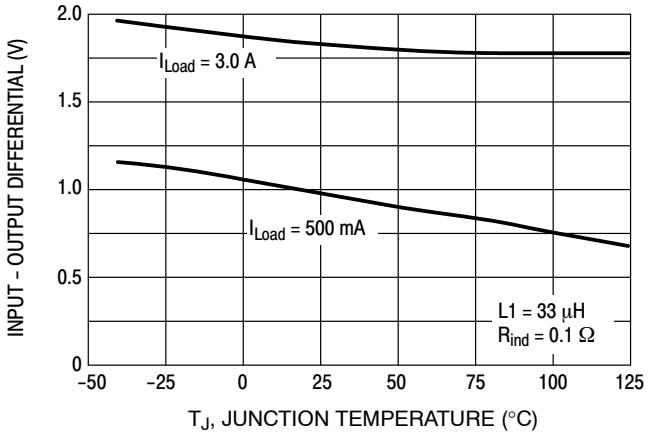

Figure 4. Dropout Voltage

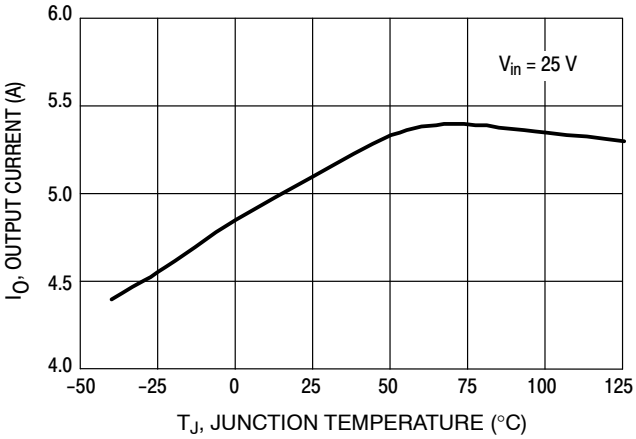

Figure 5. Current Limit

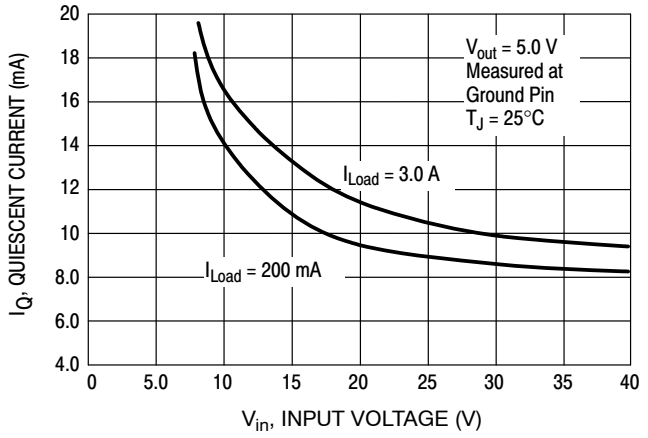

Figure 6. Quiescent Current

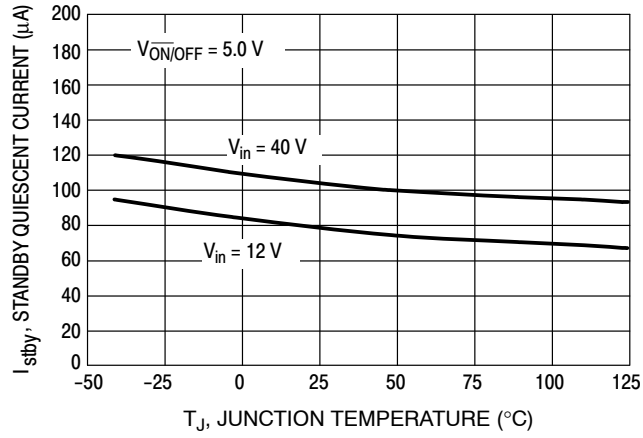

Figure 7. Standby Quiescent Current

TYPICAL PERFORMANCE CHARACTERISTICS (Circuit of Figure 15)

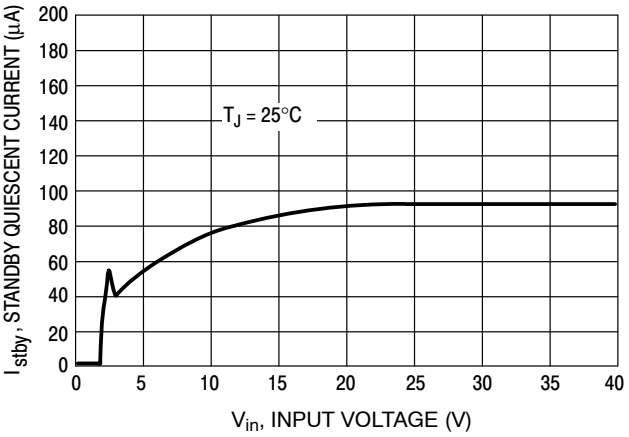

Figure 8. Standby Quiescent Current

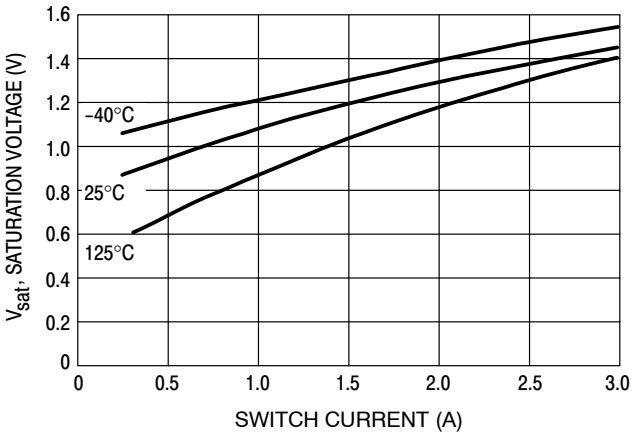

Figure 9. Switch Saturation Voltage

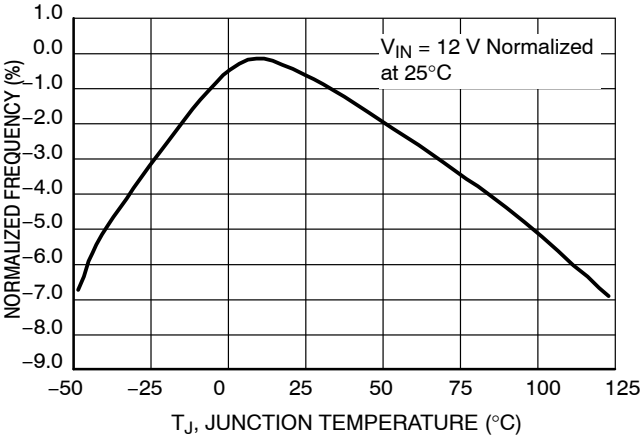

Figure 10. Switching Frequency

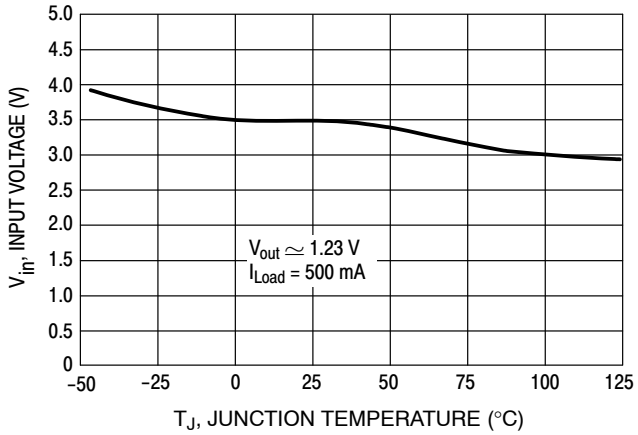

Figure 11. Minimum Supply Operating Voltage

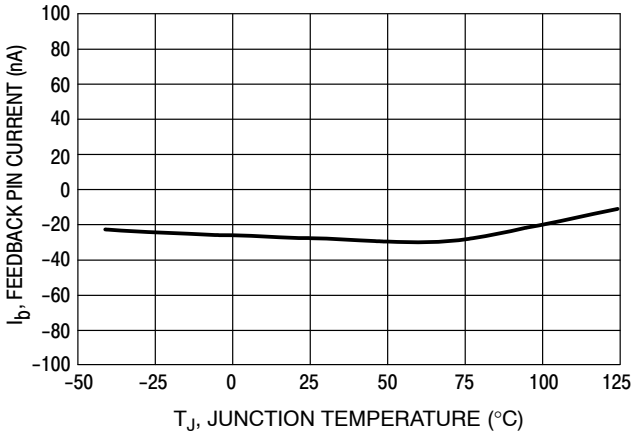

Figure 12. Feedback Pin Current

TYPICAL PERFORMANCE CHARACTERISTICS (Circuit of Figure 15)

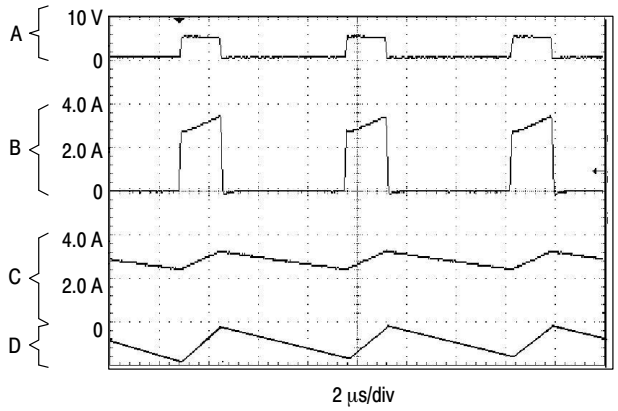

Figure 13. Switching Waveforms

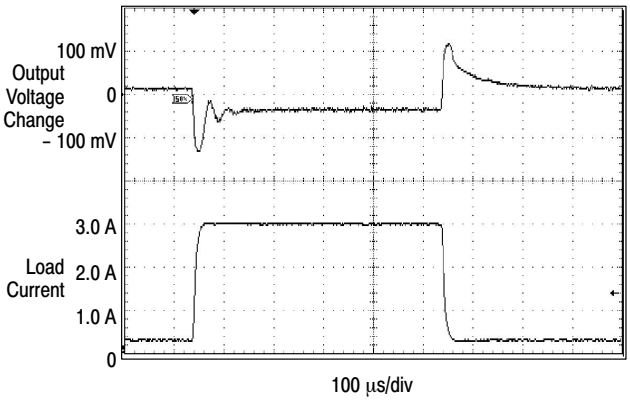

Figure 14. Load Transient Response

Vout = 5 V
A: Output Pin Voltage, 10 V/div
B: Switch Current, 2.0 A/div
C: Inductor Current, 2.0 A/div, AC−Coupled
D: Output Ripple Voltage, 50 mV/div, AC−Coupled
Horizontal Time Base: 5.0 μs/div

Adjustable Output Voltage Versions

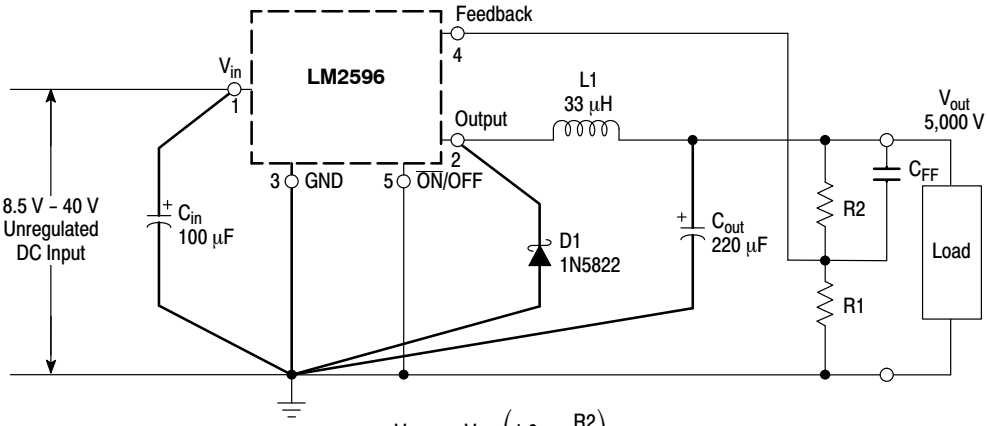

$$V_{out} = V_{ref}\left(1.0 + \frac{R2}{R1}\right)$$

$$R2 = R1\left(\frac{V_{out}}{V_{ref}} - 1.0\right)$$

Where V_{ref} = 1.23 V, R1 between 1.0 k and 5.0 k

Figure 15. Typical Test Circuit

PCB LAYOUT GUIDELINES

As in any switching regulator, the layout of the printed circuit board is very important. Rapidly switching currents associated with wiring inductance, stray capacitance and parasitic inductance of the printed circuit board traces can generate voltage transients which can generate electromagnetic interferences (EMI) and affect the desired operation. As indicated in the Figure 15, to minimize inductance and ground loops, the length of the leads indicated by heavy lines should be kept as short as possible.

For best results, single−point grounding (as indicated) or ground plane construction should be used.

On the other hand, the PCB area connected to the Pin 2 (emitter of the internal switch) of the LM2596 should be kept to a minimum in order to minimize coupling to sensitive circuitry.

Another sensitive part of the circuit is the feedback. It is important to keep the sensitive feedback wiring short. To assure this, physically locate the programming resistors near to the regulator, when using the adjustable version of the LM2596 regulator.

DESIGN PROCEDURE

Buck Converter Basics

The LM2596 is a “Buck” or Step−Down Converter which is the most elementary forward−mode converter. Its basic schematic can be seen in Figure 16.

The operation of this regulator topology has two distinct time periods. The first one occurs when the series switch is on, the input voltage is connected to the input of the inductor.

The output of the inductor is the output voltage, and the rectifier (or catch diode) is reverse biased. During this period, since there is a constant voltage source connected across the inductor, the inductor current begins to linearly ramp upwards, as described by the following equation:

$$I_{L(on)} = \frac{(V_{IN} - V_{OUT})t_{on}}{L}$$

During this “on” period, energy is stored within the core material in the form of magnetic flux. If the inductor is properly designed, there is sufficient energy stored to carry the requirements of the load during the “off” period.

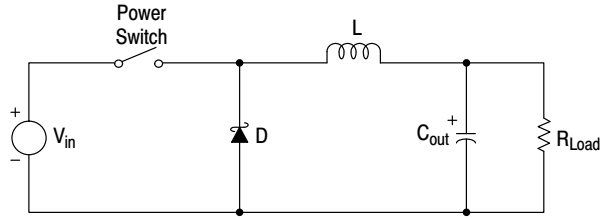

Figure 16. Basic Buck Converter

The next period is the “off” period of the power switch. When the power switch turns off, the voltage across the inductor reverses its polarity and is clamped at one diode voltage drop below ground by the catch diode. The current now flows through the catch diode thus maintaining the load current loop. This removes the stored energy from the inductor. The inductor current during this time is:

$$I_{L(off)} = \frac{(V_{OUT} - V_D)t_{off}}{L}$$

This period ends when the power switch is once again turned on. Regulation of the converter is accomplished by varying the duty cycle of the power switch. It is possible to describe the duty cycle as follows:

$$d = \frac{t_{on}}{T}, \text{ where T is the period of switching.}$$

For the buck converter with ideal components, the duty cycle can also be described as:

$$d = \frac{V_{out}}{V_{in}}$$

Figure 17 shows the buck converter, idealized waveforms of the catch diode voltage and the inductor current.

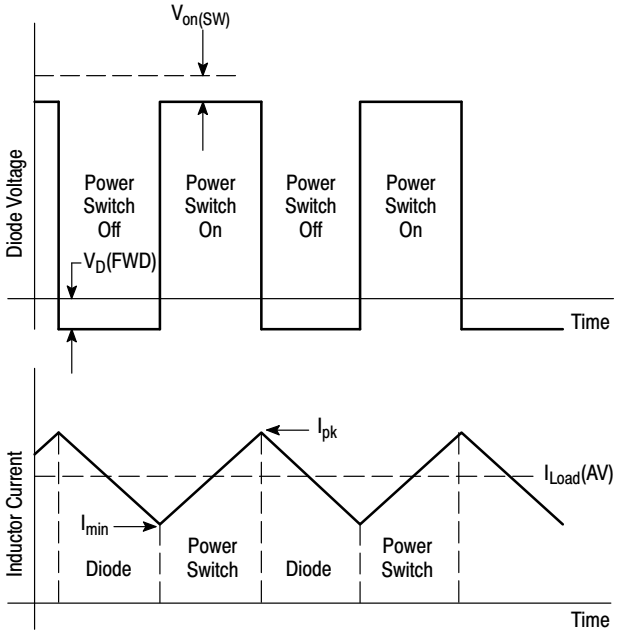

Figure 17. Buck Converter Idealized Waveforms

PROCEDURE (ADJUSTABLE OUTPUT VERSION: LM2596)

Procedure	Example
Given Parameters: V_{out} = Regulated Output Voltage $V_{in(max)}$ = Maximum DC Input Voltage $I_{Load(max)}$ = Maximum Load Current	**Given Parameters:** V_{out} = 5.0 V $V_{in(max)}$ = 12 V $I_{Load(max)}$ = 3.0 A
1. Programming Output Voltage To select the right programming resistor R1 and R2 value (see Figure 1) use the following formula: $V_{out} = V_{ref}\left(1.0 + \frac{R2}{R1}\right)$ where V_{ref} = 1.23 V Resistor R1 can be between 1.0 k and 5.0 kΩ. (For best temperature coefficient and stability with time, use 1% metal film resistors). $R2 = R1\left(\frac{V_{out}}{V_{ref}} - 1.0\right)$	**1. Programming Output Voltage** (selecting R1 and R2) Select R1 and R2: $V_{out} = 1.23\left(1.0 + \frac{R2}{R1}\right)$ Select R1 = 1.0 kΩ $R2 = R1\left(\frac{V_{out}}{V_{ref}} - 1.0\right) = \left(\frac{5\ V}{1.23\ V} - 1.0\right)$ R2 = 3.0 kΩ, choose a 3.0k metal film resistor.
2. Input Capacitor Selection (C_{in}) To prevent large voltage transients from appearing at the input and for stable operation of the converter, an aluminium or tantalum electrolytic bypass capacitor is needed between the input pin $+V_{in}$ and ground pin GND This capacitor should be located close to the IC using short leads. This capacitor should have a low ESR (Equivalent Series Resistance) value. For additional information see input capacitor section in the "Application Information" section of this data sheet.	**2. Input Capacitor Selection (C_{in})** A 100 μF, 50 V aluminium electrolytic capacitor located near the input and ground pin provides sufficient bypassing.
3. Catch Diode Selection (D1) **A.** Since the diode maximum peak current exceeds the regulator maximum load current the catch diode current rating must be at least 1.2 times greater than the maximum load current. For a robust design, the diode should have a current rating equal to the maximum current limit of the LM2596 to be able to withstand a continuous output short. **B.** The reverse voltage rating of the diode should be at least 1.25 times the maximum input voltage.	**3. Catch Diode Selection (D1)** **A.** For this example, a 3.0 A current rating is adequate. **B.** For robust design use a 30 V 1N5824 Schottky diode or any suggested fast recovery diode in the Table 2.

PROCEDURE (ADJUSTABLE OUTPUT VERSION: LM2596) (CONTINUED)

Procedure	Example
4. Inductor Selection (L1) **A.** Use the following formula to calculate the inductor Volt x microsecond [V x μs] constant: $E \times T = \left(V_{IN} - V_{OUT} - V_{SAT}\right) \times \frac{V_{OUT} + V_D}{V_{IN} - V_{SAT} + V_D} \times \frac{1000}{150\ kHz} (V \times \mu s)$ **B.** Match the calculated E x T value with the corresponding number on the vertical axis of the Inductor Value Selection Guide shown in Figure 18. This E x T constant is a measure of the energy handling capability of an inductor and is dependent upon the type of core, the core area, the number of turns, and the duty cycle. **C.** Next step is to identify the inductance region intersected by the E x T value and the maximum load current value on the horizontal axis shown in Figure 18. **D.** Select an appropriate inductor from Table 3. The inductor chosen must be rated for a switching frequency of 150 kHz and for a current rating of 1.15 x I_{Load}. The inductor current rating can also be determined by calculating the inductor peak current: $I_{p(max)} = I_{Load(max)} + \frac{\left(V_{in} - V_{out}\right) t_{on}}{2L}$ where t_{on} is the "on" time of the power switch and $t_{on} = \frac{V_{out}}{V_{in}} \times \frac{1.0}{f_{osc}}$	**4. Inductor Selection (L1)** **A.** Calculate E x T [V x μs] constant: $E \times T = (12 - 5 - 1.5) \times \frac{5 + 0.5}{12 - 5 + 0.5} \times \frac{1000}{150\ kHz} (V \times \mu s)$ $E \times T = (5.5) \times \frac{5.5}{7.5} \times 6.6 (V \times \mu s)$ **B.** E x T = 27 [V x μs] **C.** $I_{Load(max)}$ = 3.0 A Inductance Region = L40 **D.** Proper inductor value = 33 μH Choose the inductor from Table 3.
5. Output Capacitor Selection (C_{out}) **A.** Since the LM2596 is a forward−mode switching regulator with voltage mode control, its open loop has 2−pole−1−zero frequency characteristic. The loop stability is determined by the output capacitor (capacitance, ESR) and inductance values. For stable operation use recommended values of the output capacitors in Table 1. Low ESR electrolytic capacitors between 220uFand 1500uF provide best results. **B.** The capacitors voltage rating should be at least 1.5 times greater than the output voltage, and often much higher voltage rating is needed to satisfy low ESR requirement	**5. Output Capacitor Selection (C_{out})** **A.** In this example is recommended Nichicon PM capacitors: 470 μF/35 V or 220 μF/35 V
6. Feedforward Capacitor (C_{FF}) It provides additional stability mainly for higher input voltages. For Cff selection use Table 1. The compensation capacitor between 0.6 nF and 40 nF is wired in parallel with the output voltage setting resistor R2, The capacitor type can be ceramic, plastic, etc..	**6. Feedforward Capacitor (C_{FF})** In this example is recommended feedforward capacitor 15 nF or 5 nF.

LM2596 SERIES BUCK REGULATOR DESIGN PROCEDURES (CONTINUED)

Table 1. RECOMMENDED VALUES OF THE OUTPUT CAPACITOR AND FEEDFORWARD CAPACITOR
(I_{load} = 3 A)

Nichicon PM Capacitors								
V_{in} (V)	Capacity/Voltage Range/ESR (μF/V/mΩ)							
40	1500/35/24	1000/35/29	1000/35/29	680/35/36	560/25/55	560/25/55	470/35/46	470/35/46
26	1200/35/26	820/35	680/35/36	560/35/41	470/25/65	470/25/65	330/35/60	
22	1000/35/29	680/35/36	560/35/41	330/25/85	330/25/85	220/35/85		
20	820/35/32	470/35/46	470/25/65	330/25/85	330/25/85	220/35/85		
18	820/35/32	470/35/46	470/25/65	330/25/85	330/25/85	220/35/85		
12	820/35/32	470/35/46	220/35/85	220/25/111				
10	820/35/32	470/35/46	220/35/85					
V_{out} (V)	2	4	6	9	12	15	24	28
C_{FF} (nF)	**40**	**15**	**5**	**2**	**1.5**	**1**	**0.6**	**0.6**

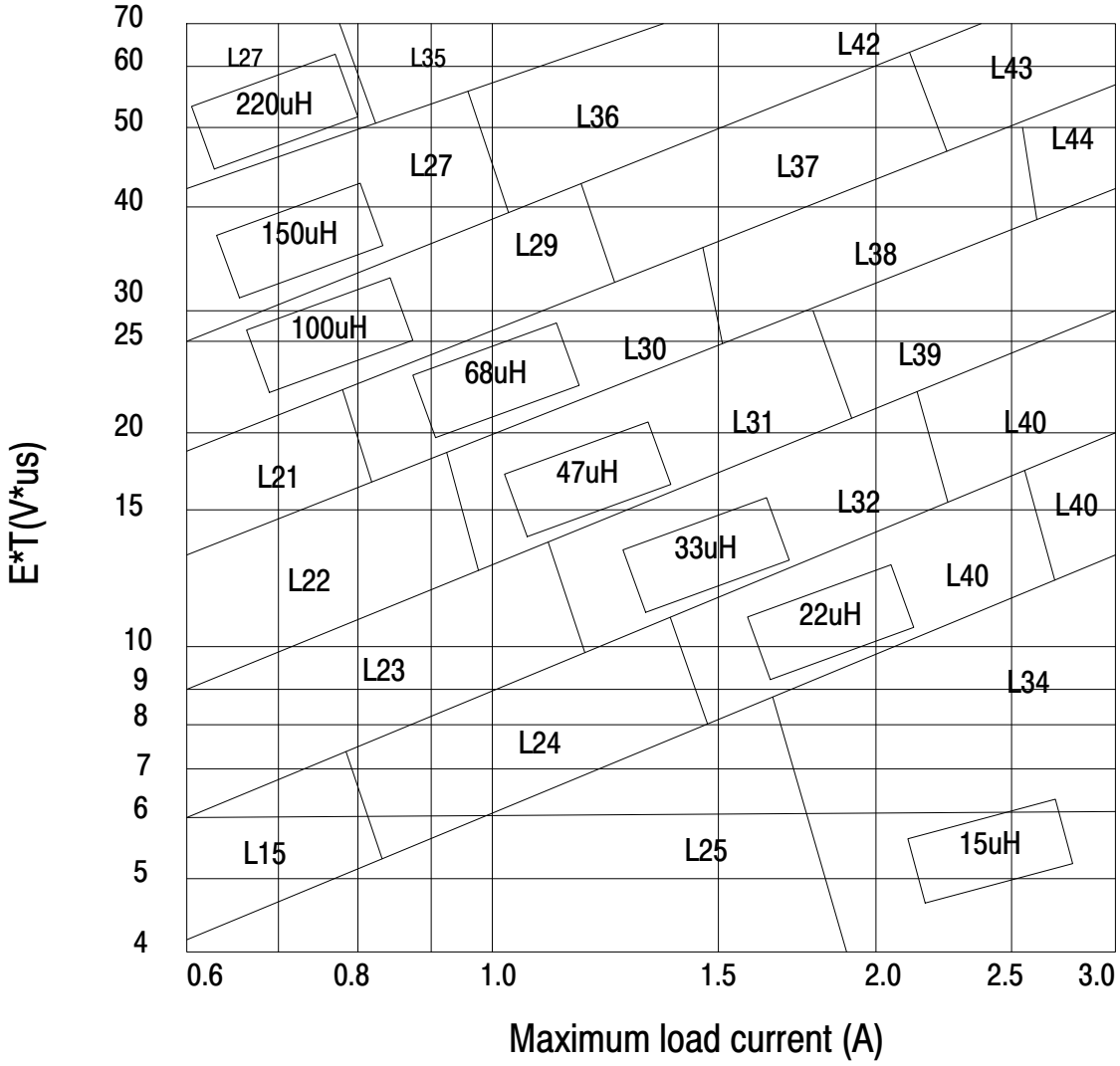

Figure 18. Inductor Value Selection Guides (For Continuous Mode Operation)

Table 2. DIODE SELECTION

	Schottky				Fast Recovery			
	3.0 A		4.0 – 6.0 A		3.0 A		4.0 – 6.0 A	
V_R	Through Hole	Surface Mount	Through Hole	Surface Mount	Through Hole	Surface Mount	Through Hole	Surface Mount
20 V	**1N5820** MBR320P SR302	SK32	**1N5823** SR502 SB520		MUR320 31DF1 HER302 (all diodes rated to at least 100 V)	**MURS320T3** **MURD320** 30WF10 (all diodes rated to at least 100 V)	**MUR420** HER602 (all diodes rated to at least 100 V)	**MURD620CT** 50WF10 (all diodes rated to at least 100 V)
30 V	**1N5821** MBR330 SR303 31DQ03	SK33 30WQ03	**1N5824** SR503 SB530	50WQ03				
40 V	**1N5822** **MBR340** SR304 31DQ04	SK34 30WQ04 **MBRS340T3** **MBRD340**	**1N5825** SR504 SB540	**MBRD640CT** 50WQ04				
50 V	MBR350 31DQ05 SR305	SK35 30WQ05	SB550	50WQ05				
60 V	**MBR360** DQ06 SR306	**MBRS360T3** **MBRD360**	50SQ080	**MBRD660CT**				

NOTE: Diodes listed in bold are available from ON Semiconductor.

Table 3. INDUCTOR MANUFACTURERS PART NUMBERS

			Schott		Renco		Pulse Engineering		Coilcraft
	Inductance (μH)	Current (A)	Through Hole	Surface Mount	Through Hole	Surface Mount	Through Hole	Surface Mount	Surface Mount
L15	22	0.99	67148350	67148460	RL−1284−22−43	RL1500−22	PE−53815	PE−53815−S	DO3308−223
L21	68	0.99	67144070	67144450	RL−5471−5	RL1500−68	PE−53821	PE−53821−S	DO3316−683
L22	47	1.17	67144080	67144460	RL−5471−6	−	PE−53822	PE−53822−S	DO3316−473
L23	33	1.40	67144090	67144470	RL−5471−7	−	PE−53823	PE−53823−S	DO3316−333
L24	22	1.70	67148370	67148480	RL−1283−22−43	−	PE−53824	PE−53825−S	DO3316−223
L25	15	2.10	67148380	67148490	RL−1283−15−43	−	PE−53825	PE−53824−S	DO3316−153
L26	330	0.80	67144100	67144480	RL−5471−1	−	PE−53826	PE−53826−S	DO5022P−334
L27	220	1.00	67144110	67144490	RL−5471−2	−	PE−53827	PE−53827−S	DO5022P−224
L28	150	1.20	67144120	67144500	RL−5471−3	−	PE−53828	PE−53828−S	DO5022P−154
L29	100	1.47	67144130	67144510	RL−5471−4	−	PE−53829	PE−53829−S	DO5022P−104
L30	68	1.78	67144140	67144520	RL−5471−5	−	PE−53830	PE−53830−S	DO5022P−683
L31	47	2.20	67144150	67144530	RL−5471−6	−	PE−53831	PE−53831−S	DO5022P−473
L32	33	2.50	67144160	67144540	RL−5471−7	−	PE−53932	PE−53932−S	DO5022P−333
L33	22	3.10	67148390	67148500	RL−1283−22−43	−	PE−53933	PE−53933−S	DO5022P−223
L34	15	3.40	67148400	67148790	RL−1283−15−43	−	PE−53934	PE−53934−S	DO5022P−153
L35	220	1.70	67144170	−	RL−5473−1	−	PE−53935	PE−53935−S	−
L36	150	2.10	67144180	−	RL−5473−4	−	PE−54036	PE−54036−S	−
L37	100	2.50	67144190	−	RL−5472−1	−	PE−54037	PE−54037−S	−
L38	68	3.10	67144200	−	RL−5472−2	−	PE−54038	PE−54038−S	DO5040H−683ML
L39	47	3.50	67144210	−	RL−5472−3	−	PE−54039	PE−54039−S	DO5040H−473ML
L40	33	3.50	67144220	67148290	RL−5472−4	−	PE−54040	PE−54040−S	DO5040H−333ML
L41	22	3.50	67144230	67148300	RL−5472−5	−	PE−54041	PE−54041−S	DO5040H−223ML
L42	150	2.70	67148410	−	RL−5473−4	−	PE−54042	PE−54042−S	−
L43	100	3.40	67144240	−	RL−5473−2	−	PE−54043		-
L44	68	3.40	67144250	−	RL−5473−3	−	PE−54044		DO5040H−683ML

APPLICATION INFORMATION

EXTERNAL COMPONENTS

Input Capacitor (C_{in})

The Input Capacitor Should Have a Low ESR

For stable operation of the switch mode converter a low ESR (Equivalent Series Resistance) aluminium or solid tantalum bypass capacitor is needed between the input pin and the ground pin, to prevent large voltage transients from appearing at the input. It must be located near the regulator and use short leads. With most electrolytic capacitors, the capacitance value decreases and the ESR increases with lower temperatures. For reliable operation in temperatures below −25°C larger values of the input capacitor may be needed. Also paralleling a ceramic or solid tantalum capacitor will increase the regulator stability at cold temperatures.

RMS Current Rating of C_{in}

The important parameter of the input capacitor is the RMS current rating. Capacitors that are physically large and have large surface area will typically have higher RMS current ratings. For a given capacitor value, a higher voltage electrolytic capacitor will be physically larger than a lower voltage capacitor, and thus be able to dissipate more heat to the surrounding air, and therefore will have a higher RMS current rating. The consequence of operating an electrolytic capacitor beyond the RMS current rating is a shortened operating life. In order to assure maximum capacitor operating lifetime, the capacitor's RMS ripple current rating should be:

$$I_{rms} > 1.2 \times d \times I_{Load}$$

where d is the duty cycle, for a buck regulator

$$d = \frac{t_{on}}{T} = \frac{V_{out}}{V_{in}}$$

and $d = \frac{t_{on}}{T} = \frac{|V_{out}|}{|V_{out}| + V_{in}}$ for a buck−boost regulator.

Output Capacitor (C_{out})

For low output ripple voltage and good stability, low ESR output capacitors are recommended. An output capacitor has two main functions: it filters the output and provides regulator loop stability. The ESR of the output capacitor and the peak−to−peak value of the inductor ripple current are the main factors contributing to the output ripple voltage value. Standard aluminium electrolytics could be adequate for some applications but for quality design, low ESR types are recommended.

An aluminium electrolytic capacitor's ESR value is related to many factors such as the capacitance value, the voltage rating, the physical size and the type of construction. In most cases, the higher voltage electrolytic capacitors have lower ESR value. Often capacitors with much higher voltage ratings may be needed to provide low ESR values that, are required for low output ripple voltage.

Feedfoward Capacitor

This capacitor adds lead compensation to the feedback loop and increases the phase margin for better loop stability. For C_{FF} selection, see the design procedure section.

The Output Capacitor Requires an ESR Value That Has an Upper and Lower Limit

As mentioned above, a low ESR value is needed for low output ripple voltage, typically 1% to 2% of the output voltage. But if the selected capacitor's ESR is extremely low (below 0.05 Ω), there is a possibility of an unstable feedback loop, resulting in oscillation at the output. This situation can occur when a tantalum capacitor, that can have a very low ESR, is used as the only output capacitor.

At Low Temperatures, Put in Parallel Aluminium Electrolytic Capacitors with Tantalum Capacitors

Electrolytic capacitors are not recommended for temperatures below −25°C. The ESR rises dramatically at cold temperatures and typically rises 3 times at −25°C and as much as 10 times at −40°C. Solid tantalum capacitors have much better ESR spec at cold temperatures and are recommended for temperatures below −25°C. They can be also used in parallel with aluminium electrolytics. The value of the tantalum capacitor should be about 10% or 20% of the total capacitance. The output capacitor should have at least 50% higher RMS ripple current rating at 150 kHz than the peak−to−peak inductor ripple current.

Catch Diode

Locate the Catch Diode Close to the LM2596

The LM2596 is a step−down buck converter; it requires a fast diode to provide a return path for the inductor current when the switch turns off. This diode must be located close to the LM2596 using short leads and short printed circuit traces to avoid EMI problems.

Use a Schottky or a Soft Switching Ultra−Fast Recovery Diode

Since the rectifier diodes are very significant sources of losses within switching power supplies, choosing the rectifier that best fits into the converter design is an important process. Schottky diodes provide the best performance because of their fast switching speed and low forward voltage drop.

They provide the best efficiency especially in low output voltage applications (5.0 V and lower). Another choice could be Fast−Recovery, or Ultra−Fast Recovery diodes. It has to be noted, that some types of these diodes with an abrupt turnoff characteristic may cause instability or EMI troubles.

A fast−recovery diode with soft recovery characteristics can better fulfill some quality, low noise design requirements. Table 2 provides a list of suitable diodes for the LM2596 regulator. Standard 50/60 Hz rectifier diodes, such as the 1N4001 series or 1N5400 series are **NOT** suitable.

Inductor

The magnetic components are the cornerstone of all switching power supply designs. The style of the core and the winding technique used in the magnetic component's design has a great influence on the reliability of the overall power supply.

Using an improper or poorly designed inductor can cause high voltage spikes generated by the rate of transitions in current within the switching power supply, and the possibility of core saturation can arise during an abnormal operational mode. Voltage spikes can cause the semiconductors to enter avalanche breakdown and the part can instantly fail if enough energy is applied. It can also cause significant RFI (Radio Frequency Interference) and EMI (Electro−Magnetic Interference) problems.

Continuous and Discontinuous Mode of Operation

The LM2596 step−down converter can operate in both the continuous and the discontinuous modes of operation. The regulator works in the continuous mode when loads are relatively heavy, the current flows through the inductor continuously and never falls to zero. Under light load conditions, the circuit will be forced to the discontinuous mode when inductor current falls to zero for certain period of time (see Figure 19 and Figure 20). Each mode has distinctively different operating characteristics, which can affect the regulator performance and requirements. In many cases the preferred mode of operation is the continuous mode. It offers greater output power, lower peak currents in the switch, inductor and diode, and can have a lower output ripple voltage. On the other hand it does require larger inductor values to keep the inductor current flowing continuously, especially at low output load currents and/or high input voltages.

To simplify the inductor selection process, an inductor selection guide for the LM2596 regulator was added to this data sheet (Figure 18). This guide assumes that the regulator is operating in the continuous mode, and selects an inductor that will allow a peak−to−peak inductor ripple current to be a certain percentage of the maximum design load current. This percentage is allowed to change as different design load currents are selected. For light loads (less than approximately 300 mA) it may be desirable to operate the regulator in the discontinuous mode, because the inductor value and size can be kept relatively low. Consequently, the percentage of inductor peak−to−peak current increases. This discontinuous mode of operation is perfectly acceptable for this type of switching converter. Any buck regulator will be forced to enter discontinuous mode if the load current is light enough.

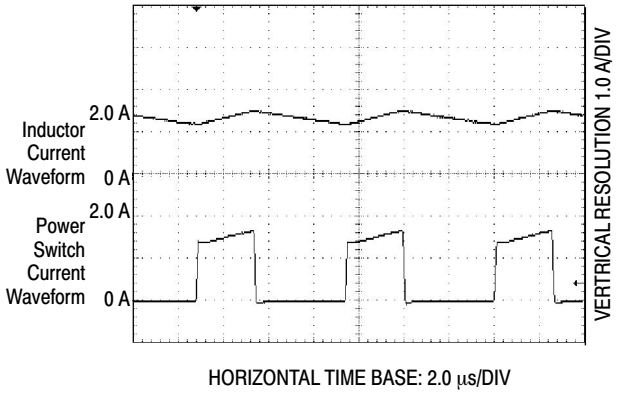

Figure 19. Continuous Mode Switching Current Waveforms

Selecting the Right Inductor Style

Some important considerations when selecting a core type are core material, cost, the output power of the power supply, the physical volume the inductor must fit within, and the amount of EMI (Electro−Magnetic Interference) shielding that the core must provide. The inductor selection guide covers different styles of inductors, such as pot core, E−core, toroid and bobbin core, as well as different core materials such as ferrites and powdered iron from different manufacturers.

For high quality design regulators the toroid core seems to be the best choice. Since the magnetic flux is contained within the core, it generates less EMI, reducing noise problems in sensitive circuits. The least expensive is the bobbin core type, which consists of wire wound on a ferrite rod core. This type of inductor generates more EMI due to the fact that its core is open, and the magnetic flux is not contained within the core.

When multiple switching regulators are located on the same printed circuit board, open core magnetics can cause

interference between two or more of the regulator circuits, especially at high currents due to mutual coupling. A toroid, pot core or E−core (closed magnetic structure) should be used in such applications.

Do Not Operate an Inductor Beyond its Maximum Rated Current

Exceeding an inductor's maximum current rating may cause the inductor to overheat because of the copper wire losses, or the core may saturate. Core saturation occurs when the flux density is too high and consequently the cross sectional area of the core can no longer support additional lines of magnetic flux.

This causes the permeability of the core to drop, the inductance value decreases rapidly and the inductor begins to look mainly resistive. It has only the DC resistance of the winding. This can cause the switch current to rise very rapidly and force the LM2596 internal switch into cycle−by−cycle current limit, thus reducing the DC output load current. This can also result in overheating of the inductor and/or the LM2596. Different inductor types have different saturation characteristics, and this should be kept in mind when selecting an inductor.

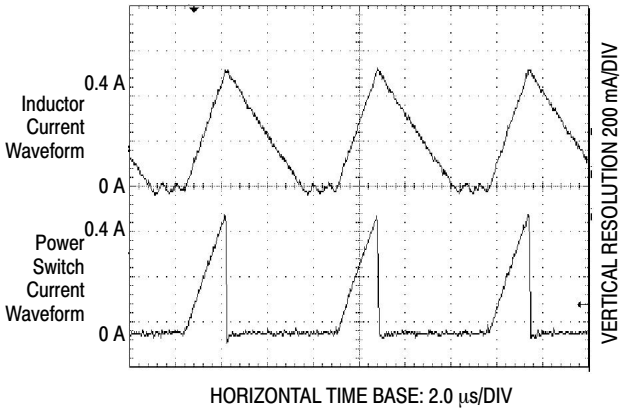

Figure 20. Discontinuous Mode Switching Current Waveforms

GENERAL RECOMMENDATIONS

Output Voltage Ripple and Transients

Source of the Output Ripple

Since the LM2596 is a switch mode power supply regulator, its output voltage, if left unfiltered, will contain a sawtooth ripple voltage at the switching frequency. The output ripple voltage value ranges from 0.5% to 3% of the output voltage. It is caused mainly by the inductor sawtooth ripple current multiplied by the ESR of the output capacitor.

Short Voltage Spikes and How to Reduce Them

The regulator output voltage may also contain short voltage spikes at the peaks of the sawtooth waveform (see Figure 21). These voltage spikes are present because of the fast switching action of the output switch, and the parasitic inductance of the output filter capacitor. There are some other important factors such as wiring inductance, stray capacitance, as well as the scope probe used to evaluate these transients, all these contribute to the amplitude of these spikes. To minimize these voltage spikes, low inductance capacitors should be used, and their lead lengths must be kept short. The importance of quality printed circuit board layout design should also be highlighted.

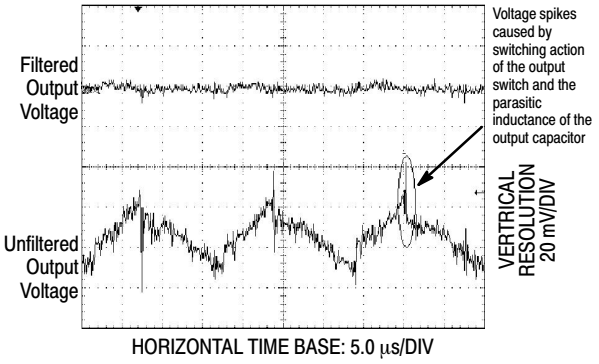

Figure 21. Output Ripple Voltage Waveforms

Minimizing the Output Ripple

In order to minimize the output ripple voltage it is possible to enlarge the inductance value of the inductor L1 and/or to use a larger value output capacitor. There is also another way to smooth the output by means of an additional LC filter (20 μH, 100 μF), that can be added to the output (see Figure 30) to further reduce the amount of output ripple and transients. With such a filter it is possible to reduce the output ripple voltage transients 10 times or more. Figure 21 shows the difference between filtered and unfiltered output waveforms of the regulator shown in Figure 30.

The lower waveform is from the normal unfiltered output of the converter, while the upper waveform shows the output ripple voltage filtered by an additional LC filter.

Heatsinking and Thermal Considerations

The Through−Hole Package TO−220

The LM2596 is available in two packages, a 5−pin TO−220(T, TV) and a 5−pin surface mount D^2PAK(D2T). Although the TO−220(T) package needs a heatsink under most conditions, there are some applications that require no heatsink to keep the LM2596 junction temperature within the allowed operating range. Higher ambient temperatures require some heat sinking, either to the printed circuit (PC) board or an external heatsink.

The Surface Mount Package D^2PAK and its Heatsinking

The other type of package, the surface mount D^2PAK, is designed to be soldered to the copper on the PC board. The copper and the board are the heatsink for this package and the other heat producing components, such as the catch diode and inductor. The PC board copper area that the package is soldered to should be at least 0.4 in^2 (or 260 mm^2) and ideally should have 2 or more square inches (1300 mm^2) of 0.0028 inch copper. Additional increases of copper area beyond approximately 6.0 in^2 (4000 mm^2) will not improve

heat dissipation significantly. If further thermal improvements are needed, double sided or multilayer PC boards with large copper areas should be considered. In order to achieve the best thermal performance, it is highly recommended to use wide copper traces as well as large areas of copper in the printed circuit board layout. The only exception to this is the OUTPUT (switch) pin, which should not have large areas of copper (see page 8 'PCB Layout Guideline').

Thermal Analysis and Design

The following procedure must be performed to determine whether or not a heatsink will be required. First determine:

1. $P_{D(max)}$ maximum regulator power dissipation in the application.
2. $T_{A(max)}$ maximum ambient temperature in the application.
3. $T_{J(max)}$ maximum allowed junction temperature (125°C for the LM2596). For a conservative design, the maximum junction temperature should not exceed 110°C to assure safe operation. For every additional +10°C temperature rise that the junction must withstand, the estimated operating lifetime of the component is halved.
4. $R_{\theta JC}$ package thermal resistance junction−case.
5. $R_{\theta JA}$ package thermal resistance junction−ambient.

(Refer to Maximum Ratings on page 2 of this data sheet or $R_{\theta JC}$ and $R_{\theta JA}$ values).

The following formula is to calculate the approximate total power dissipated by the LM2596:

$$P_D = (V_{in} \times I_Q) + d \times I_{Load} \times V_{sat}$$

where d is the duty cycle and for buck converter

$$d = \frac{t_{on}}{T} = \frac{V_O}{V_{in}},$$

I_Q (quiescent current) and V_{sat} can be found in the LM2596 data sheet,

V_{in} is minimum input voltage applied,

V_O is the regulator output voltage,

I_{Load} is the load current.

The dynamic switching losses during turn−on and turn−off can be neglected if proper type catch diode is used.

Packages Not on a Heatsink (Free−Standing)

For a free−standing application when no heatsink is used, the junction temperature can be determined by the following expression:

$$T_J = (R_{\theta JA})\ (P_D) + T_A$$

where $(R_{\theta JA})(P_D)$ represents the junction temperature rise caused by the dissipated power and T_A is the maximum ambient temperature.

Packages on a Heatsink

If the actual operating junction temperature is greater than the selected safe operating junction temperature determined in step 3, than a heatsink is required. The junction temperature will be calculated as follows:

$$T_J = P_D\ (R_{\theta JA} + R_{\theta CS} + R_{\theta SA}) + T_A$$

where $R_{\theta JC}$ is the thermal resistance junction−case,
$R_{\theta CS}$ is the thermal resistance case−heatsink,
$R_{\theta SA}$ is the thermal resistance heatsink−ambient.

If the actual operating temperature is greater than the selected safe operating junction temperature, then a larger heatsink is required.

Some Aspects That can Influence Thermal Design

It should be noted that the package thermal resistance and the junction temperature rise numbers are all approximate, and there are many factors that will affect these numbers, such as PC board size, shape, thickness, physical position, location, board temperature, as well as whether the surrounding air is moving or still.

Other factors are trace width, total printed circuit copper area, copper thickness, single− or double−sided, multilayer board, the amount of solder on the board or even color of the traces.

The size, quantity and spacing of other components on the board can also influence its effectiveness to dissipate the heat.

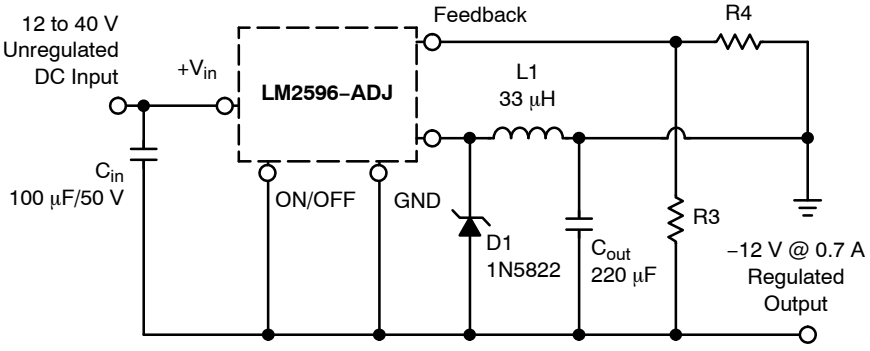

Figure 22. Inverting Buck−Boost Develops −12 V

ADDITIONAL APPLICATIONS

Inverting Regulator

An inverting buck−boost regulator using the LM2596−ADJ is shown in Figure 22. This circuit converts a positive input voltage to a negative output voltage with a common ground by bootstrapping the regulators ground to the negative output voltage. By grounding the feedback pin, the regulator senses the inverted output voltage and regulates it.

In this example the LM2596−12 is used to generate a −12 V output. The maximum input voltage in this case cannot exceed +28 V because the maximum voltage appearing across the regulator is the absolute sum of the input and output voltages and this must be limited to a maximum of 40 V.

This circuit configuration is able to deliver approximately 0.7 A to the output when the input voltage is 12 V or higher. At lighter loads the minimum input voltage required drops to approximately 4.7 V, because the buck−boost regulator topology can produce an output voltage that, in its absolute value, is either greater or less than the input voltage.

Since the switch currents in this buck−boost configuration are higher than in the standard buck converter topology, the available output current is lower.

This type of buck−boost inverting regulator can also require a larger amount of startup input current, even for light loads. This may overload an input power source with a current limit less than 5.0 A.

Such an amount of input startup current is needed for at least 2.0 ms or more. The actual time depends on the output voltage and size of the output capacitor.

Because of the relatively high startup currents required by this inverting regulator topology, the use of a delayed startup or an undervoltage lockout circuit is recommended.

Using a delayed startup arrangement, the input capacitor can charge up to a higher voltage before the switch−mode regulator begins to operate.

The high input current needed for startup is now partially supplied by the input capacitor C_{in}.

It has been already mentioned above, that in some situations, the delayed startup or the undervoltage lockout features could be very useful. A delayed startup circuit applied to a buck−boost converter is shown in Figure 27. Figure 29 in the “Undervoltage Lockout” section describes an undervoltage lockout feature for the same converter topology.

Design Recommendations:

The inverting regulator operates in a different manner than the buck converter and so a different design procedure has to be used to select the inductor L1 or the output capacitor C_{out}.

The output capacitor values must be larger than what is normally required for buck converter designs. Low input voltages or high output currents require a large value output capacitor (in the range of thousands of μF).

The recommended range of inductor values for the inverting converter design is between 68 μH and 220 μH. To select an inductor with an appropriate current rating, the inductor peak current has to be calculated.

The following formula is used to obtain the peak inductor current:

$$I_{peak} \approx \frac{I_{Load}\,(V_{in} + |V_O|)}{V_{in}} + \frac{V_{in} \times t_{on}}{2L_1}$$

$$\text{where } t_{on} = \frac{|V_O|}{V_{in} + |V_O|} \times \frac{1.0}{f_{osc}}, \text{ and } f_{osc} = 150 \text{ kHz}$$

Under normal continuous inductor current operating conditions, the worst case occurs when V_{in} is minimal.

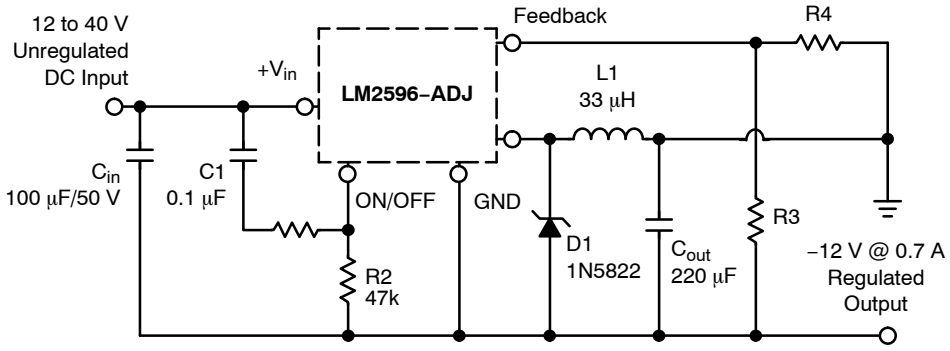

Figure 23. Inverting Buck−Boost Develops −12 V

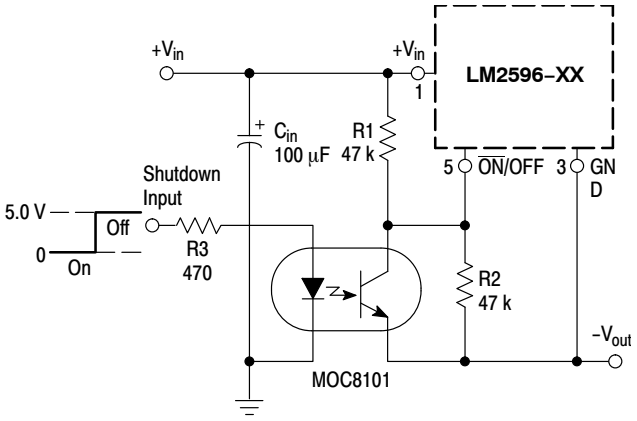

NOTE: This picture does not show the complete circuit.

Figure 24. Inverting Buck−Boost Regulator Shutdown Circuit Using an Optocoupler

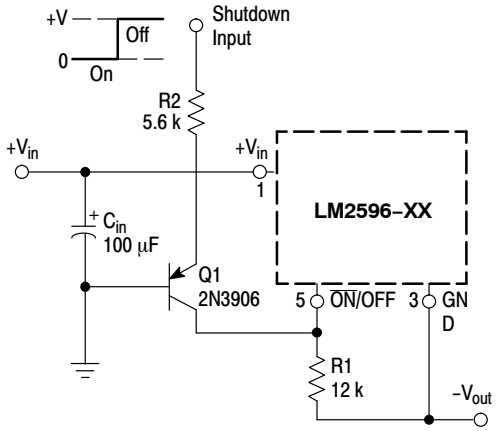

NOTE: This picture does not show the complete circuit.

Figure 25. Inverting Buck−Boost Regulator Shutdown Circuit Using a PNP Transistor

With the inverting configuration, the use of the $\overline{ON}$/OFF pin requires some level shifting techniques. This is caused by the fact, that the ground pin of the converter IC is no longer at ground. Now, the $\overline{ON}$/OFF pin threshold voltage (1.3 V approximately) has to be related to the negative output voltage level. There are many different possible shut down methods, two of them are shown in Figures 24 and 25.

Negative Boost Regulator

This example is a variation of the buck−boost topology and it is called negative boost regulator. This regulator experiences relatively high switch current, especially at low input voltages. The internal switch current limiting results in lower output load current capability.

The circuit in Figure 26 shows the negative boost configuration. The input voltage in this application ranges from −5.0 V to −12 V and provides a regulated −12 V output. If the input voltage is greater than −12 V, the output will rise above −12 V accordingly, but will not damage the regulator.

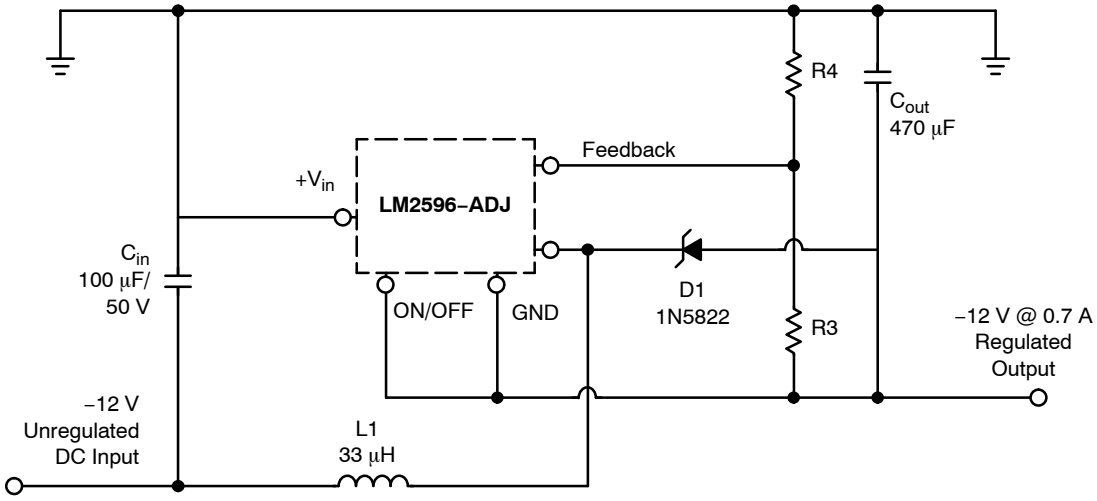

Figure 26. Negative Boost Regulator

Design Recommendations:

The same design rules as for the previous inverting buck−boost converter can be applied. The output capacitor C_{out} must be chosen larger than would be required for a what standard buck converter. Low input voltages or high output currents require a large value output capacitor (in the range of thousands of μF). The recommended range of inductor values for the negative boost regulator is the same as for inverting converter design.

Another important point is that these negative boost converters cannot provide current limiting load protection in the event of a short in the output so some other means, such as a fuse, may be necessary to provide the load protection.

Delayed Startup

There are some applications, like the inverting regulator already mentioned above, which require a higher amount of startup current. In such cases, if the input power source is limited, this delayed startup feature becomes very useful.

To provide a time delay between the time when the input voltage is applied and the time when the output voltage comes up, the circuit in Figure 27 can be used. As the input voltage is applied, the capacitor C1 charges up, and the voltage across the resistor R2 falls down. When the voltage on the $\overline{ON}$/OFF pin falls below the threshold value 1.3 V, the regulator starts up. Resistor R1 is included to limit the maximum voltage applied to the $\overline{ON}$/OFF pin. It reduces the power supply noise sensitivity, and also limits the capacitor C1 discharge current, but its use is not mandatory.

When a high 50 Hz or 60 Hz (100 Hz or 120 Hz respectively) ripple voltage exists, a long delay time can cause some problems by coupling the ripple into the $\overline{ON}$/OFF pin, the regulator could be switched periodically on and off with the line (or double) frequency.

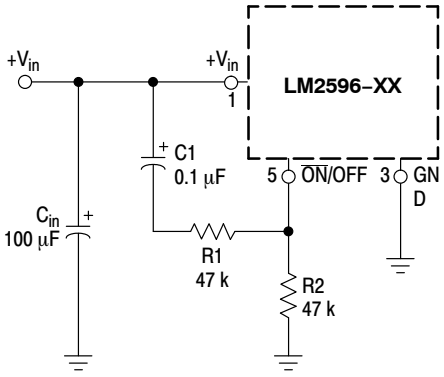

NOTE: This picture does not show the complete circuit.

Figure 27. Delayed Startup Circuitry

Undervoltage Lockout

Some applications require the regulator to remain off until the input voltage reaches a certain threshold level. Figure 28 shows an undervoltage lockout circuit applied to a buck regulator. A version of this circuit for buck−boost converter is shown in Figure 29. Resistor R3 pulls the $\overline{ON}$/OFF pin high and keeps the regulator off until the input voltage reaches a predetermined threshold level with respect to the ground Pin 3, which is determined by the following expression:

$$V_{th} \approx V_{Z1} + \left(1.0 + \frac{R2}{R1}\right) V_{BE}\,(Q1)$$

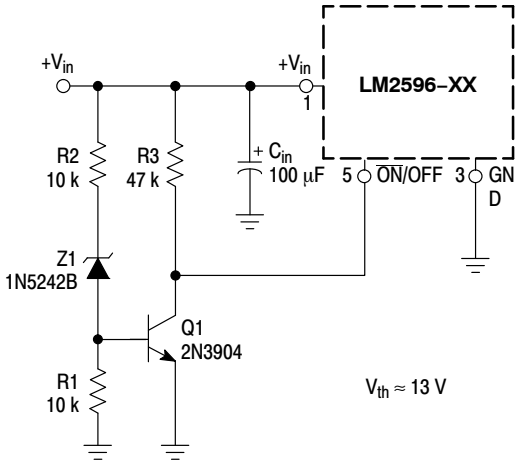

NOTE: This picture does not show the complete circuit.

Figure 28. Undervoltage Lockout Circuit for Buck Converter

The following formula is used to obtain the peak inductor current:

$$I_{peak} \approx \frac{I_{Load}\,(V_{in} + |V_O|)}{V_{in}} + \frac{V_{in} \times t_{on}}{2L_1}$$

$$\text{where } t_{on} = \frac{|V_O|}{V_{in} + |V_O|} \times \frac{1.0}{f_{osc}}, \text{ and } f_{osc} = 150\ \text{kHz}$$

Under normal continuous inductor current operating conditions, the worst case occurs when V_{in} is minimal.

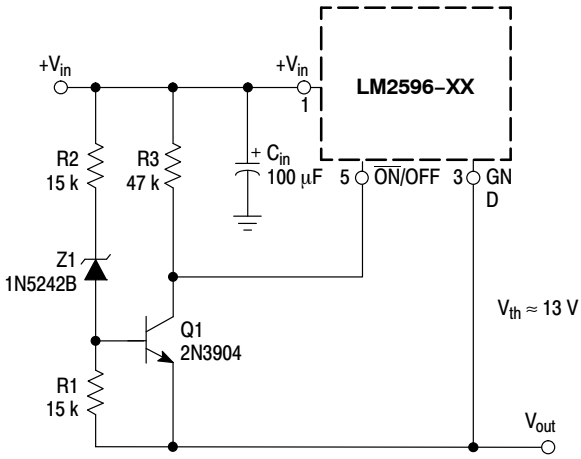

NOTE: This picture does not show the complete circuit.

Figure 29. Undervoltage Lockout Circuit for Buck−Boost Converter

Adjustable Output, Low−Ripple Power Supply

A 3.0 A output current capability power supply that features an adjustable output voltage is shown in Figure 30.

This regulator delivers 3.0 A into 1.2 V to 35 V output. The input voltage ranges from roughly 3.0 V to 40 V. In order to achieve a 10 or more times reduction of output ripple, an additional L−C filter is included in this circuit.

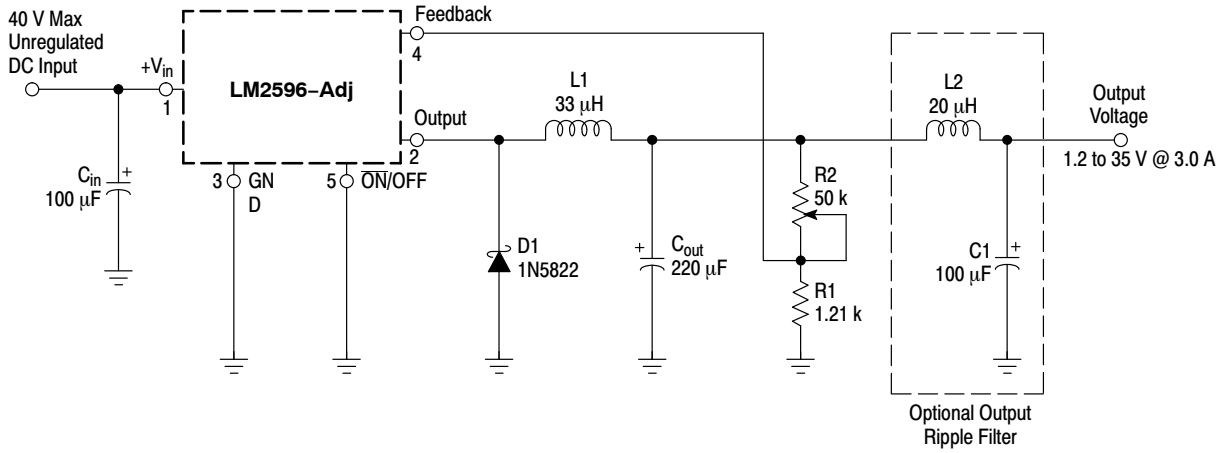

Figure 30. 1.2 to 35 V Adjustable 3.0 A Power Supply with Low Output Ripple

THE LM2596 STEP−DOWN VOLTAGE REGULATOR WITH 5.0 V @ 3.0 A OUTPUT POWER CAPABILITY. TYPICAL APPLICATION WITH THROUGH−HOLE PC BOARD LAYOUT

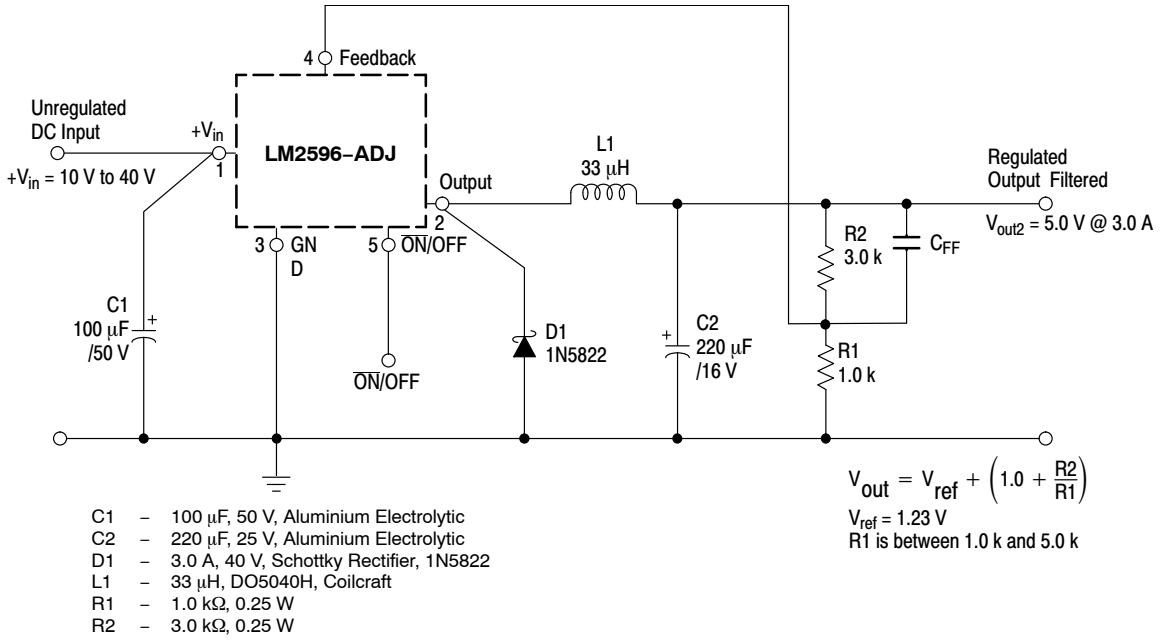

Figure 31. Schematic Diagram of the 5.0 V @ 3.0 A Step−Down Converter Using the LM2596−ADJ

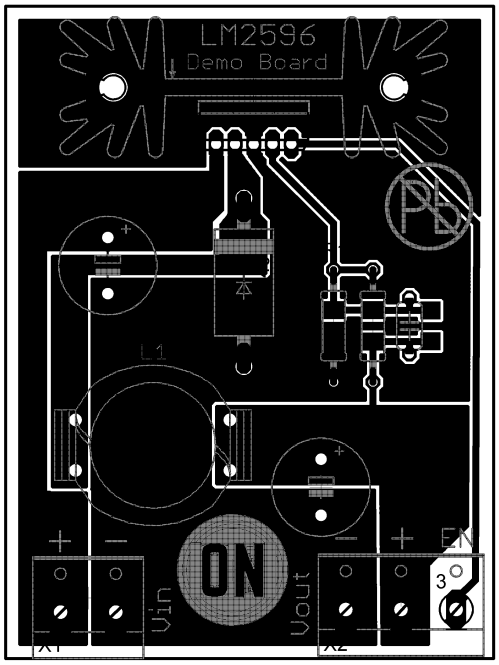

NOTE: Not to scale.

Figure 32. Printed Circuit Board Layout Component Side

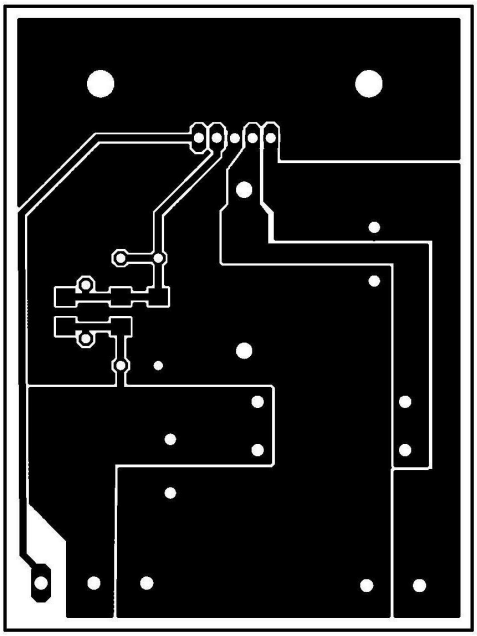

NOTE: Not to scale.

Figure 33. Printed Circuit Board Layout Copper Side

References

- National Semiconductor LM2596 Data Sheet and Application Note
- National Semiconductor LM2595 Data Sheet and Application Note
- Marty Brown “Practical Switching Power Supply Design”, Academic Press, Inc., San Diego 1990
- Ray Ridley “High Frequency Magnetics Design”, Ridley Engineering, Inc. 1995

ORDERING INFORMATION

Device	Package	Shipping†
LM2596TADJG	TO−220 (Pb−Free)	50 Units / Tube
LM2596TVADJG	TO−220 (F) (Pb−Free)	50 Units / Tube
LM2596DSADJG	D^2PAK (Pb−Free)	50 Units / Tube
LM2596DSADJR4G	D^2PAK (Pb−Free)	800 / Tape & Reel

†For information on tape and reel specifications, including part orientation and tape sizes, please refer to our Tape and Reel Packaging Specifications Brochure, BRD8011/D.

MECHANICAL CASE OUTLINE
PACKAGE DIMENSIONS

ON Semiconductor®

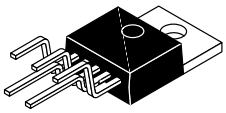

SCALE 1:1

TO−220 5 LEAD OFFSET
CASE 314B−05
ISSUE L

DATE 01/07/1994

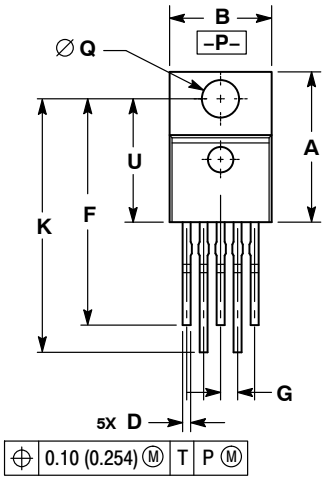

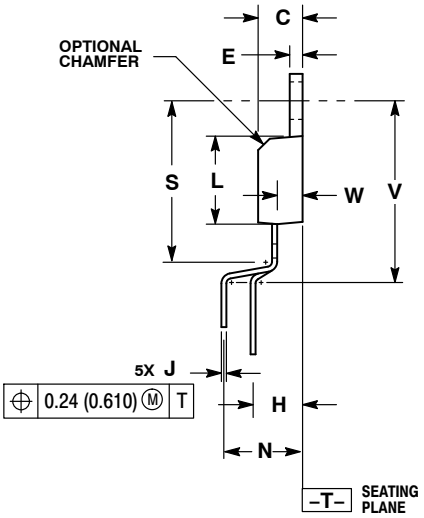

NOTES:
1. DIMENSIONING AND TOLERANCING PER ANSI Y14.5M, 1982.
2. CONTROLLING DIMENSION: INCH.
3. DIMENSION D DOES NOT INCLUDE INTERCONNECT BAR (DAMBAR) PROTRUSION. DIMENSION D INCLUDING PROTRUSION SHALL NOT EXCEED 0.043 (1.092) MAXIMUM.

	INCHES		MILLIMETERS	
DIM	MIN	MAX	MIN	MAX
A	0.572	0.613	14.529	15.570
B	0.390	0.415	9.906	10.541
C	0.170	0.180	4.318	4.572
D	0.025	0.038	0.635	0.965
E	0.048	0.055	1.219	1.397
F	0.850	0.935	21.590	23.749
G	0.067 BSC		1.702 BSC	
H	0.166 BSC		4.216 BSC	
J	0.015	0.025	0.381	0.635
K	0.900	1.100	22.860	27.940
L	0.320	0.365	8.128	9.271
N	0.320 BSC		8.128 BSC	
Q	0.140	0.153	3.556	3.886
S	---	0.620	---	15.748
U	0.468	0.505	11.888	12.827
V	---	0.735	---	18.669
W	0.090	0.110	2.286	2.794

STYLE 1 THRU 4:
CANCELLED

STYLE 5:
PIN 1. GATE
2. MIRROR
3. DRAIN
4. KELVIN
5. SOURCE

DOCUMENT NUMBER:	**98ASB42218B**	Electronic versions are uncontrolled except when accessed directly from the Document Repository. Printed versions are uncontrolled except when stamped "CONTROLLED COPY" in red.	
DESCRIPTION:	**TO−220 5 LEAD OFFSET**		**PAGE 1 OF 1**

ON Semiconductor and ON are trademarks of Semiconductor Components Industries, LLC dba ON Semiconductor or its subsidiaries in the United States and/or other countries. ON Semiconductor reserves the right to make changes without further notice to any products herein. ON Semiconductor makes no warranty, representation or guarantee regarding the suitability of its products for any particular purpose, nor does ON Semiconductor assume any liability arising out of the application or use of any product or circuit, and specifically disclaims any and all liability, including without limitation special, consequential or incidental damages. ON Semiconductor does not convey any license under its patent rights nor the rights of others.

© Semiconductor Components Industries, LLC, 2019

MECHANICAL CASE OUTLINE
PACKAGE DIMENSIONS

ON Semiconductor®

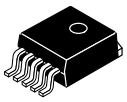

D²PAK 5−LEAD
CASE 936A−02
ISSUE E

DATE 28 JUL 2021

SCALE 1:1

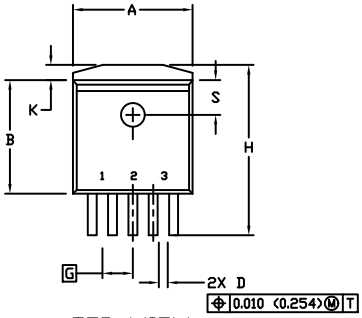

TOP VIEW

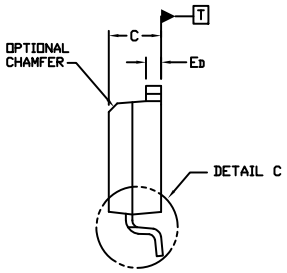

SIDE VIEW
DUAL GUAGE CONSTRUCTION

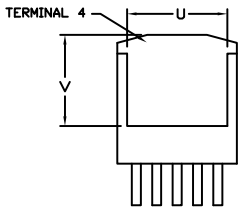

BOTTOM VIEW

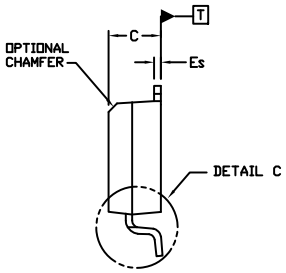

SIDE VIEW
SINGLE GUAGE CONSTRUCTION

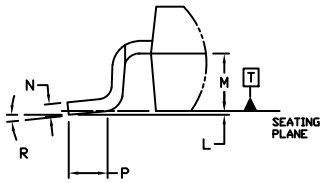

DETAIL C
TIP LEADFORM
ROTATED 90° CW

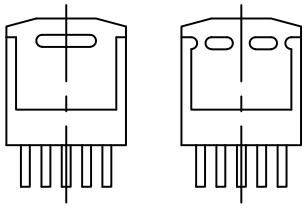

BOTTOM VIEW
OPTIONAL CONSTRUCTIONS

NOTES:

1. DIMENSIONING AND TOLERANCING PER ANSI Y14.5M, 1982.
2. CONTROLLING DIMENSION: INCHES
3. TAB CONTOUR OPTIONAL WITHIN DIMENSIONS A AND K.
4. DIMENSIONS U AND V ESTABLISH A MINIMUM MOUNTING SURFACE FOR TERMINAL 4.
5. DIMENSIONS A AND B DO NOT INCLUDE MOLD FLASH OR GATE PROTRUSIONS. MOLD FLASH AND GATE PROTRUSIONS NOT TO EXCEED 0.025 (0.635) MAXIMUM.

	INCHES		MILLIMETERS	
DIM	MIN.	MAX.	MIN.	MAX.
A	0.396	0.403	9.804	10.236
B	0.356	0.368	9.042	9.347
C	0.170	0.180	4.318	4.572
D	0.026	0.036	0.660	0.914
ED	0.045	0.055	1.143	1.397
ES	0.018	0.026	0.457	0.660
G	0.067 BSC		1.702 BSC	
H	0.539	0.579	13.691	14.707
K	0.050 REF		1.270 REF	
L	0.000	0.010	0.000	0.254
M	0.088	0.102	2.235	2.591
N	0.018	0.026	0.457	0.660
P	0.058	0.078	1.473	1.981
R	0°	8°	0°	8°
S	0.116 REF		2.946 REF	
U	0.200 MIN		5.080 MIN	
V	0.250 MIN		6.350 MIN	

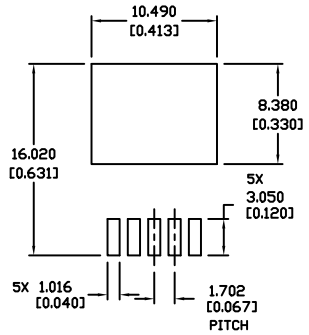

RECOMMENDED
MOUNTING FOOTPRINT *

* For additional information on our Pb-Free strategy and soldering details, please download the ON Semiconductor Soldering and Mounting Techniques Reference Manual, SOLDERRM/D.

GENERIC MARKING DIAGRAM*

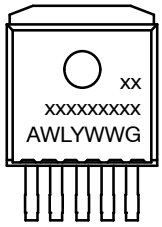

XXXXXX	= Device Code
A	= Assembly Location
WL	= Wafer Lot
Y	= Year
WW	= Work Week
G	= Pb−Free Package

*This information is generic. Please refer to device data sheet for actual part marking. Pb−Free indicator, “G” or microdot “▪”, may or may not be present. Some products may not follow the Generic Marking.

DOCUMENT NUMBER:	**98ASH01006A**	Electronic versions are uncontrolled except when accessed directly from the Document Repository. Printed versions are uncontrolled except when stamped “CONTROLLED COPY” in red.
DESCRIPTION:	**D2PAK 5−LEAD**	**PAGE 1 OF 1**

ON Semiconductor and ON are trademarks of Semiconductor Components Industries, LLC dba ON Semiconductor or its subsidiaries in the United States and/or other countries. ON Semiconductor reserves the right to make changes without further notice to any products herein. ON Semiconductor makes no warranty, representation or guarantee regarding the suitability of its products for any particular purpose, nor does ON Semiconductor assume any liability arising out of the application or use of any product or circuit, and specifically disclaims any and all liability, including without limitation special, consequential or incidental damages. ON Semiconductor does not convey any license under its patent rights nor the rights of others.

© Semiconductor Components Industries, LLC, 2019

onsemi, , and other names, marks, and brands are registered and/or common law trademarks of Semiconductor Components Industries, LLC dba "**onsemi**" or its affiliates and/or subsidiaries in the United States and/or other countries. **onsemi** owns the rights to a number of patents, trademarks, copyrights, trade secrets, and other intellectual property. A listing of **onsemi**'s product/patent coverage may be accessed at www.onsemi.com/site/pdf/Patent−Marking.pdf. **onsemi** reserves the right to make changes at any time to any products or information herein, without notice. The information herein is provided "as−is" and **onsemi** makes no warranty, representation or guarantee regarding the accuracy of the information, product features, availability, functionality, or suitability of its products for any particular purpose, nor does **onsemi** assume any liability arising out of the application or use of any product or circuit, and specifically disclaims any and all liability, including without limitation special, consequential or incidental damages. Buyer is responsible for its products and applications using **onsemi** products, including compliance with all laws, regulations and safety requirements or standards, regardless of any support or applications information provided by **onsemi**. "Typical" parameters which may be provided in **onsemi** data sheets and/or specifications can and do vary in different applications and actual performance may vary over time. All operating parameters, including "Typicals" must be validated for each customer application by customer's technical experts. **onsemi** does not convey any license under any of its intellectual property rights nor the rights of others. **onsemi** products are not designed, intended, or authorized for use as a critical component in life support systems or any FDA Class 3 medical devices or medical devices with a same or similar classification in a foreign jurisdiction or any devices intended for implantation in the human body. Should Buyer purchase or use **onsemi** products for any such unintended or unauthorized application, Buyer shall indemnify and hold **onsemi** and its officers, employees, subsidiaries, affiliates, and distributors harmless against all claims, costs, damages, and expenses, and reasonable attorney fees arising out of, directly or indirectly, any claim of personal injury or death associated with such unintended or unauthorized use, even if such claim alleges that **onsemi** was negligent regarding the design or manufacture of the part. **onsemi** is an Equal Opportunity/Affirmative Action Employer. This literature is subject to all applicable copyright laws and is not for resale in any manner.

ADDITIONAL INFORMATION

TECHNICAL PUBLICATIONS:
Technical Library: www.onsemi.com/design/resources/technical−documentation
onsemi Website: www.onsemi.com

ONLINE SUPPORT: www.onsemi.com/support
For additional information, please contact your local Sales Representative at www.onsemi.com/support/sales