Thank you for your interest in **onsemi** products.

Your technical document begins on the following pages.

Your Feedback is Important to Us!

Please take a moment to participate in our short survey.
At **onsemi**, we are dedicated to delivering technical content that best meets your needs.

Help Us Improve – Take the Survey

This survey is intended to collect your feedback, capture any issues you may encounter, and to provide improvements you would like to suggest.

We look forward to your feedback.

To learn more about **onsemi**, please visit our website at
www.onsemi.com

onsemi and onsemi and other names, marks, and brands are registered and/or common law trademarks of Semiconductor Components Industries, LLC dba "**onsemi**" or its affiliates and/or subsidiaries in the United States and/or other countries. **onsemi** owns the rights to a number of patents, trademarks, copyrights, trade secrets, and other intellectual property. A listing of **onsemi** product/patent coverage may be accessed at www.onsemi.com/site/pdf/Patent-Marking.pdf. **onsemi** reserves the right to make changes at any time to any products or information herein, without notice. The information herein is provided "as-is" and **onsemi** makes no warranty, representation or guarantee regarding the accuracy of the information, product features, availability, functionality, or suitability of its products for any particular purpose, nor does **onsemi** assume any liability arising out of the application or use of any product or circuit, and specifically disclaims any and all liability, including without limitation special, consequential or incidental damages. Buyer is responsible for its products and applications using **onsemi** products, including compliance with all laws, regulations and safety requirements or standards, regardless of any support or applications information provided by **onsemi**. "Typical" parameters which may be provided in **onsemi** data sheets and/or specifications can and do vary in different applications and actual performance may vary over time. All operating parameters, including "Typicals" must be validated for each customer application by customer's technical experts. **onsemi** does not convey any license under any of its intellectual property rights nor the rights of others. **onsemi** products are not designed, intended, or authorized for use as a critical component in life support systems or any FDA Class 3 medical devices or medical devices with a same or similar classification in a foreign jurisdiction or any devices intended for implantation in the human body. Should Buyer purchase or use **onsemi** products for any such unintended or unauthorized application, Buyer shall indemnify and hold **onsemi** and its officers, employees, subsidiaries, affiliates, and distributors harmless against all claims, costs, damages, and expenses, and reasonable attorney fees arising out of, directly or indirectly, any claim of personal injury or death associated with such unintended or unauthorized use, even if such claim alleges that **onsemi** was negligent regarding the design or manufacture of the part. **onsemi** is an Equal Opportunity/Affirmative Action Employer. This literature is subject to all applicable copyright laws and is not for resale in any manner. Other names and brands may be claimed as the property of others.

Single Supply Quad Comparators

LM339, LM339E, LM239, LM2901, LM2901E, LM2901V, NCV2901, MC3302

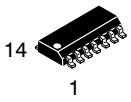

SOIC−14
D SUFFIX
CASE 751A

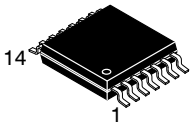

TSSOP−14
DTB SUFFIX
CASE 948G

These comparators are designed for use in level detection, low−level sensing and memory applications in consumer, automotive, and industrial electronic applications.

Features

- Single Supply Operation: 3.0 V to 36 V
- Split Supply Operation: ±1.5 V to ±18 V
- Low Input Bias Current: 25 nA (Typ)
- Low Input Offset Current: ±5.0 nA (Typ)
- Low Input Offset Voltage
- Input Common Mode Voltage Range to GND
- Low Output Saturation Voltage: 130 mV (Typ) @ 4.0 mA
- TTL and CMOS Compatible
- ESD Clamps on the Inputs Increase Reliability without Affecting Device Operation
- NCV Prefix for Automotive and Other Applications Requiring Unique Site and Control Change Requirements; AEC−Q100 Qualified and PPAP Capable
- These Devices are Pb−Free, Halogen Free/BFR Free and are RoHS Compliant

PIN CONNECTIONS

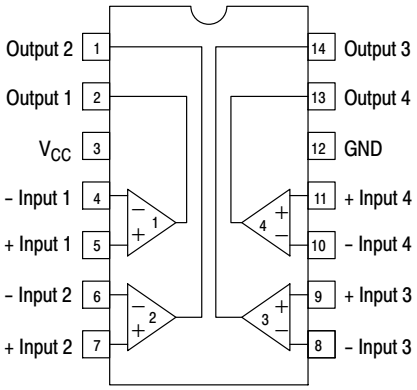

(Top View)

ORDERING INFORMATION

See detailed ordering and shipping information in the package dimensions section on page 7 of this data sheet.

DEVICE MARKING INFORMATION

See general marking information in the device marking section on page 8 of this data sheet.

© Semiconductor Components Industries, LLC, 2016

MAXIMUM RATINGS

Rating	Symbol	Value	Unit
Power Supply Voltage LM239/LM339, E/LM2901, E, V MC3302	V_{CC}	 +36 or ±18 +30 or ±15	Vdc
Input Differential Voltage Range LM239/LM339, E/LM2901, E, V MC3302	V_{IDR}	 36 30	Vdc
Input Common Mode Voltage Range	V_{ICMR}	−0.3 to 36	Vdc
Output Short Circuit to Ground (Note 1)	I_{SC}	Continuous	
Power Dissipation @ T_A = 25°C Plastic Package Derate above 25°C	P_D $1/R_{\theta JA}$	 1.0 8.0	 W mW/°C
Junction Temperature	T_J	150	°C
Operating Ambient Temperature Range LM239 MC3302 LM2901, LM2901E LM2901V, NCV2901 LM339, LM339E	T_A	 −25 to +85 −40 to +85 −40 to +105 −40 to +125 0 to +70	°C
Storage Temperature Range	T_{stg}	−65 to +150	°C

Stresses exceeding those listed in the Maximum Ratings table may damage the device. If any of these limits are exceeded, device functionality should not be assumed, damage may occur and reliability may be affected.

1. The maximum output current may be as high as 20 mA, independent of the magnitude of V_{CC}. Output short circuits to V_{CC} can cause excessive heating and eventual destruction.

ESD RATINGS

Rating	HBM	MM	Unit
ESD Protection at any Pin (Human Body Model − HBM, Machine Model − MM)			
NCV2901	2000	200	V
LM339E, LM2901E	1500	200	V
LM339DG/DR2G, LM2901DG/DR2G	250	100	V
All Other Devices	1500	200	V

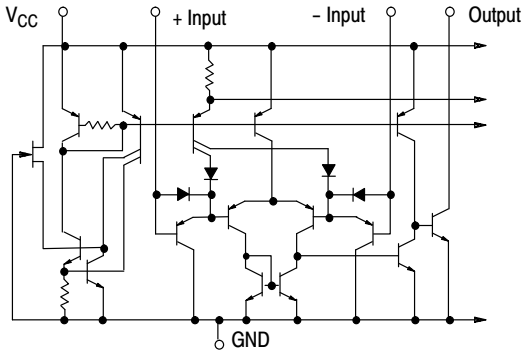

NOTE: Diagram shown is for 1 comparator.

Figure 1. Circuit Schematic

ELECTRICAL CHARACTERISTICS (V_{CC} = +5.0 Vdc, T_A = +25°C, unless otherwise noted)

Characteristic	Symbol	LM239/339/339E			LM2901/2901E/2901V /NCV2901			MC3302			Unit
		Min	Typ	Max	Min	Typ	Max	Min	Typ	Max	
Input Offset Voltage (Note 3)	V_{IO}	–	±2.0	±5.0	–	±2.0	±7.0	–	±3.0	±20	mVdc
Input Bias Current (Notes 3, 4) (Output in Analog Range)	I_{IB}	–	25	250	–	25	250	–	25	500	nA
Input Offset Current (Note 3)	I_{IO}	–	±5.0	±50	–	±5.0	±50	–	±3.0	±100	nA
Input Common Mode Voltage Range (Note 5)	V_{ICMR}	0	–	V_{CC} –1.5	0	–	V_{CC} –1.5	0	–	V_{CC} –1.5	V
Supply Current	I_{CC}										mA
R_L = ∞ (For All Comparators)		–	0.8	2.0	–	0.8	2.0	–	0.8	2.0	
R_L = ∞, V_{CC} = 30 Vdc		–	1.0	2.5	–	1.0	2.5	–	1.0	2.5	
Voltage Gain R_L ≥ 15 kΩ, V_{CC} = 15 Vdc	A_{VOL}	50	200	–	25	100	–	25	100	–	V/mV
Large Signal Response Time V_I = TTL Logic Swing, V_{ref} = 1.4 Vdc, V_{RL} = 5.0 Vdc, R_L = 5.1 kΩ	–	–	300	–	–	300	–	–	300	–	ns
Response Time (Note 6) V_{RL} = 5.0 Vdc, R_L = 5.1 kΩ	–	–	1.3	–	–	1.3	–	–	1.3	–	μs
Output Sink Current V_I (–) ≥ +1.0 Vdc, V_I(+) = 0, V_O ≤ 1.5 Vdc	I_{Sink}	6.0	16	–	6.0	16	–	6.0	16	–	mA
Saturation Voltage V_I(–) ≥ +1.0 Vdc, V_I(+) = 0, I_{sink} ≤ 4.0 mA	V_{sat}	–	130	400	–	130	400	–	130	500	mV
Output Leakage Current V_I(+) ≥ +1.0 Vdc, V_I(–) = 0, V_O = +5.0 Vdc	I_{OL}	–	0.1	–	–	0.1	–	–	0.1	–	nA

Product parametric performance is indicated in the Electrical Characteristics for the listed test conditions, unless otherwise noted. Product performance may not be indicated by the Electrical Characteristics if operated under different conditions.

2. (LM239) T_{low} = –25°C, T_{high} = +85°
   (LM339, LM339E) T_{low} = 0°C, T_{high} = +70°C
   (MC3302) T_{low} = –40°C, T_{high} = +85°C
   (LM2901), LM2901E T_{low} = –40°C, T_{high} = +105°
   (LM2901V & NCV2901) T_{low} = –40°C, T_{high} = +125°C
   NCV2901 is qualified for automotive use.
3. At the output switch point, $V_O \simeq$ 1.4 Vdc, $R_S \leq$ 100 Ω 5.0 Vdc ≤ V_{CC} ≤ 30 Vdc, with the inputs over the full common mode range (0 Vdc to V_{CC} –1.5 Vdc).
4. The bias current flows out of the inputs due to the PNP input stage. This current is virtually constant, independent of the output state.
5. Positive excursions of input voltage may exceed the power supply level. As long as one input voltage remains within the common mode range, the comparator will provide a proper output state. Refer to the Maximum Ratings table for safe operating area.
6. The response time specified is for a 100 mV input step with 5.0 mV overdrive. For larger signals, 300 ns is typical.

PERFORMANCE CHARACTERISTICS (V_{CC} = +5.0 Vdc, T_A = T_{low} to T_{high} [Note 7])

Characteristic	Symbol	LM239/339/339E			LM2901/2901E/2901V /NCV2901			MC3302			Unit
		Min	Typ	Max	Min	Typ	Max	Min	Typ	Max	
Input Offset Voltage (Note 8)	V_{IO}	–	–	±9.0	–	–	±15	–	–	±40	mVdc
Input Bias Current (Notes 8, 9) (Output in Analog Range)	I_{IB}	–	–	400	–	–	500	–	–	1000	nA
Input Offset Current (Note 8)	I_{IO}	–	–	±150	–	–	±200	–	–	±300	nA
Input Common Mode Voltage Range	V_{ICMR}	0	–	V_{CC} –2.0	0	–	V_{CC} –2.0	0	–	V_{CC} –2.0	V
Saturation Voltage $V_I(-) \geq +1.0$ Vdc, $V_I(+) = 0$, $I_{sink} \leq 4.0$ mA	V_{sat}	–	–	700	–	–	700	–	–	700	mV
Output Leakage Current $V_I(+) \geq +1.0$ Vdc, $V_I(-) = 0$, V_O = 30 Vdc	I_{OL}	–	–	1.0	–	–	1.0	–	–	1.0	μA
Differential Input Voltage All $V_I \geq 0$ Vdc	V_{ID}	–	–	V_{CC}	–	–	V_{CC}	–	–	V_{CC}	Vdc

7. (LM239) T_{low} = −25°C, T_{high} = +85°
   (LM339, LM339E) T_{low} = 0°C, T_{high} = +70°C
   (MC3302) T_{low} = −40°C, T_{high} = +85°C
   (LM2901, LM2901E) T_{low} = −40°C, T_{high} = +105°
   (LM2901V & NCV2901) T_{low} = −40°C, T_{high} = +125°C
   NCV2901 is qualified for automotive use.
8. At the output switch point, $V_O \simeq$ 1.4 Vdc, $R_S \leq 100\ \Omega$ 5.0 Vdc ≤ V_{CC} ≤ 30 Vdc, with the inputs over the full common mode range (0 Vdc to V_{CC} −1.5 Vdc).
9. The bias current flows out of the inputs due to the PNP input stage. This current is virtually constant, independent of the output state.

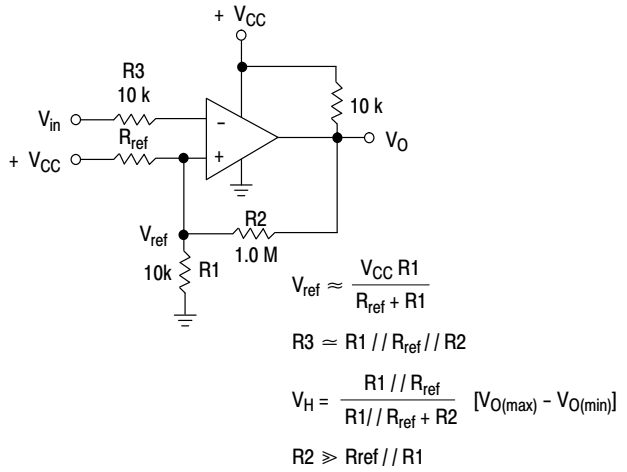

Figure 2. Inverting Comparator with Hysteresis

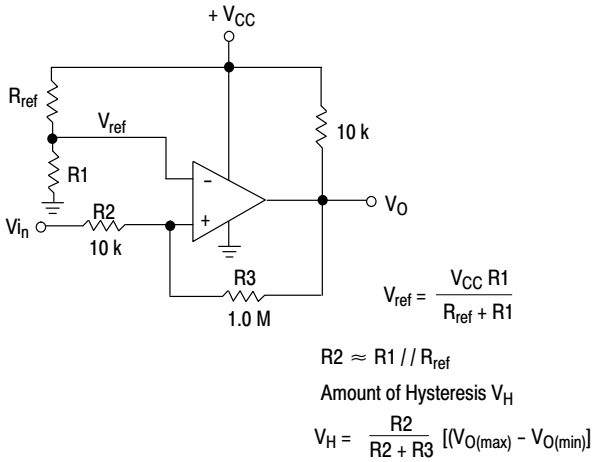

Figure 3. Noninverting Comparator with Hysteresis

Typical Characteristics

(V_{CC} = 15 Vdc, T_A = +25°C (each comparator) unless otherwise noted.)

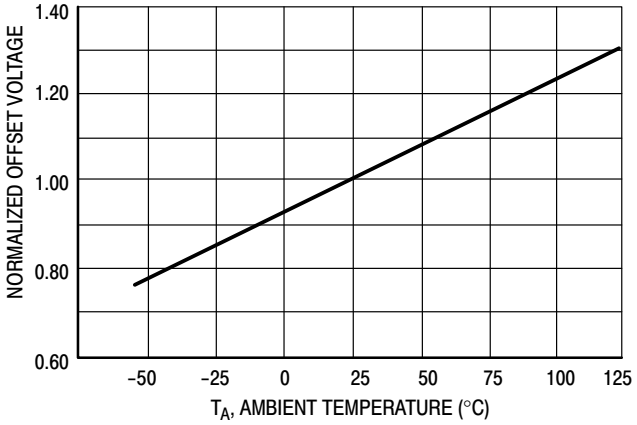

Figure 4. Normalized Input Offset Voltage

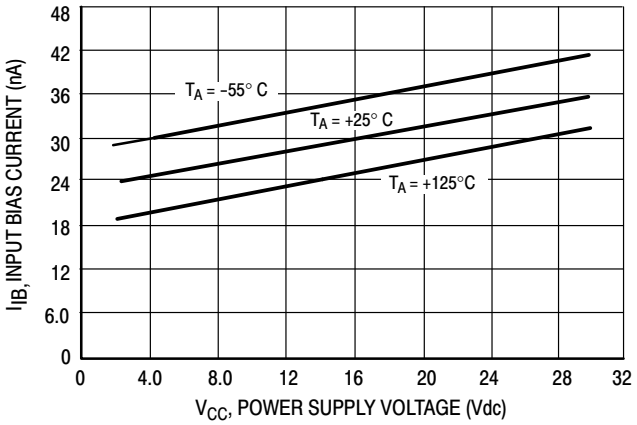

Figure 5. Input Bias Current

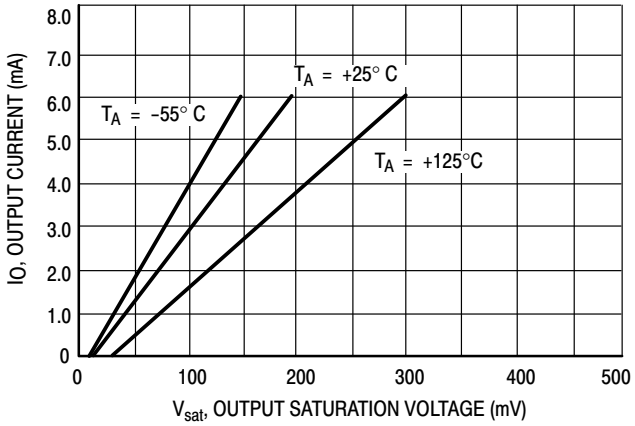

Figure 6. Output Sink Current versus Output Saturation Voltage

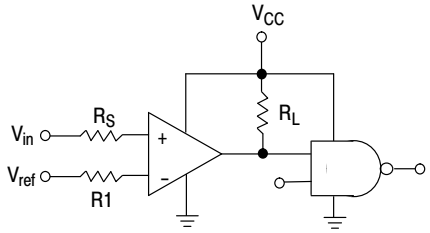

R_S = Source Resistance
$R1 \simeq R_S$

Logic	Device	V_{CC} (V)	R_L kΩ
CMOS	1/4 MC14001	+15	100
TTL	1/4 MC7400	+5.0	10

Figure 7. Driving Logic

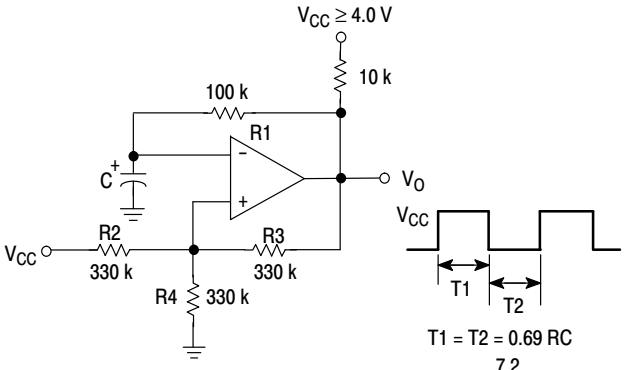

T1 = T2 = 0.69 RC

$$f \approx \frac{7.2}{C(\mu F)}$$

R2 = R3 = R4

R1 ≈ R2 // R3 // R4

Figure 8. Squarewave Oscillator

APPLICATIONS INFORMATION

These quad comparators feature high gain, wide bandwidth characteristics. This gives the device oscillation tendencies if the outputs are capacitively coupled to the inputs via stray capacitance. This oscillation manifests itself during output transitions (V_{OL} to V_{OH}). To alleviate this situation input resistors < 10 kΩ should be used. The addition of positive feedback (< 10 mV) is also recommended. It is good design practice to ground all unused input pins.

Differential input voltages may be larger than supply voltages without damaging the comparator's inputs. Voltages more negative than −300 mV should not be used.

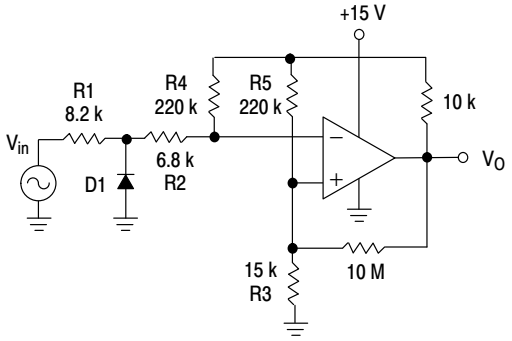

D1 prevents input from going negative by more than 0.6 V.

$$R1 + R2 = R3$$

$$R3 \leq \frac{R5}{10} \text{ for small error in zero crossing}$$

Figure 9. Zero Crossing Detector (Single Supply)

$V_{in(min)} \approx 0.4$ V peak for 1% phase distortion ($\Delta\theta$).

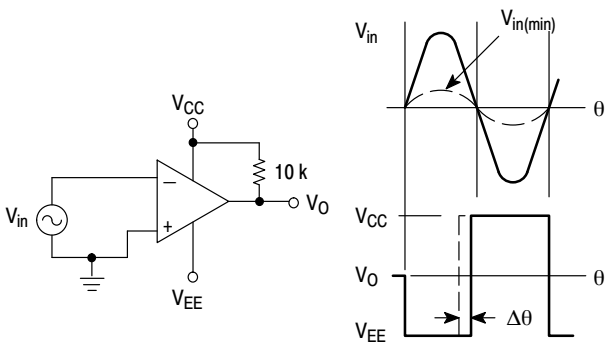

Figure 10. Zero Crossing Detector (Split Supplies)

ORDERING INFORMATION

Device	Package	Shipping†
LM239DR2G	SOIC−14 (Pb−Free)	2500 / Tape & Reel
LM239DTBR2G	TSSOP−14 (Pb−Free)	2500 / Tape & Reel
LM339DR2G	SOIC−14 (Pb−Free)	2500 / Tape & Reel
LM339EDR2G	SOIC−14 (Pb−Free)	2500 / Tape & Reel
LM339DTBR2G	TSSOP−14 (Pb−Free)	2500 / Tape & Reel
LM2901DR2G	SOIC−14 (Pb−Free)	2500 / Tape & Reel
LM2901EDR2G	SOIC−14 (Pb−Free)	2500 / Tape & Reel
LM2901DTBR2G	TSSOP−14 (Pb−Free)	2500 / Tape & Reel
LM2901VDR2G	SOIC−14 (Pb−Free)	2500 / Tape & Reel
LM2901VDTBR2G	TSSOP−14 (Pb−Free)	2500 / Tape & Reel
NCV2901DR2G*	SOIC−14 (Pb−Free)	2500 / Tape & Reel
NCV2901DTBR2G*	TSSOP−14 (Pb−Free)	2500 / Tape & Reel
NCV2901CTR*	Bare Die	6000 / Tape & Reel
MC3302DR2G	SOIC−14 (Pb−Free)	2500 / Tape & Reel

†For information on tape and reel specifications, including part orientation and tape sizes, please refer to our Tape and Reel Packaging Specifications Brochure, BRD8011/D.

*NCV Prefix for Automotive and Other Applications Requiring Unique Site and Control Change Requirements; AEC−Q100 Qualified and PPAP Capable.

MARKING DIAGRAMS

SOIC−14
D SUFFIX
CASE 751A

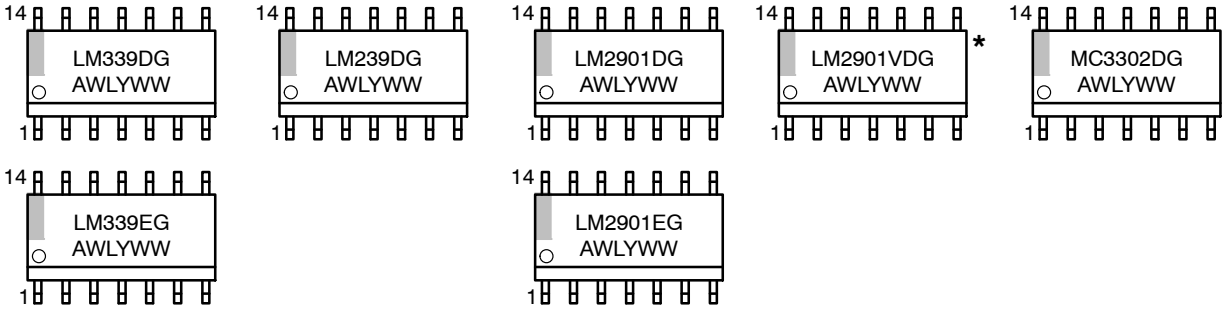

TSSOP−14
DTB SUFFIX
CASE 948G

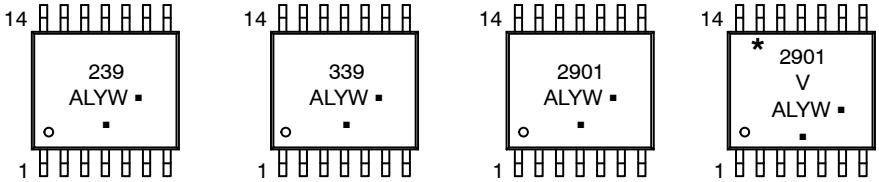

A = Assembly Location
WL, L = Wafer Lot
YY, Y = Year
WW, W = Work Week
G or ▪ = Pb−Free Package
(Note: Microdot may be in either location)
*This marking diagram also applies to NCV2901.

MECHANICAL CASE OUTLINE
PACKAGE DIMENSIONS

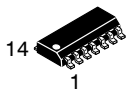

SCALE 1:1

SOIC−14 NB
CASE 751A−03
ISSUE L

DATE 03 FEB 2016

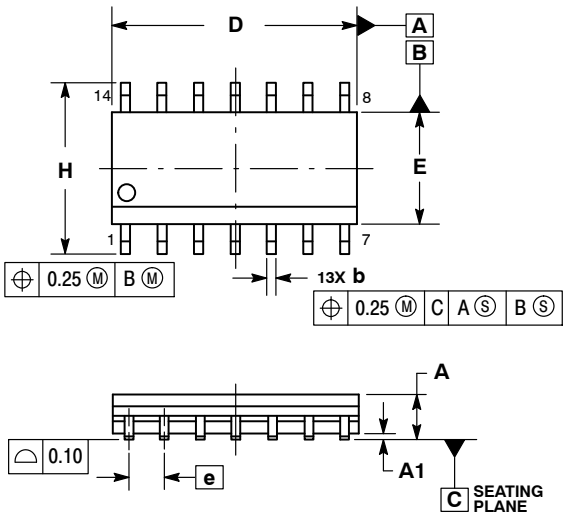

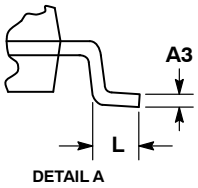

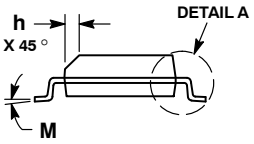

NOTES:
1. DIMENSIONING AND TOLERANCING PER ASME Y14.5M, 1994.
2. CONTROLLING DIMENSION: MILLIMETERS.
3. DIMENSION b DOES NOT INCLUDE DAMBAR PROTRUSION. ALLOWABLE PROTRUSION SHALL BE 0.13 TOTAL IN EXCESS OF AT MAXIMUM MATERIAL CONDITION.
4. DIMENSIONS D AND E DO NOT INCLUDE MOLD PROTRUSIONS.
5. MAXIMUM MOLD PROTRUSION 0.15 PER SIDE.

	MILLIMETERS		INCHES	
DIM	MIN	MAX	MIN	MAX
A	1.35	1.75	0.054	0.068
A1	0.10	0.25	0.004	0.010
A3	0.19	0.25	0.008	0.010
b	0.35	0.49	0.014	0.019
D	8.55	8.75	0.337	0.344
E	3.80	4.00	0.150	0.157
e	1.27 BSC		0.050 BSC	
H	5.80	6.20	0.228	0.244
h	0.25	0.50	0.010	0.019
L	0.40	1.25	0.016	0.049
M	0 °	7 °	0 °	7 °

SOLDERING FOOTPRINT*

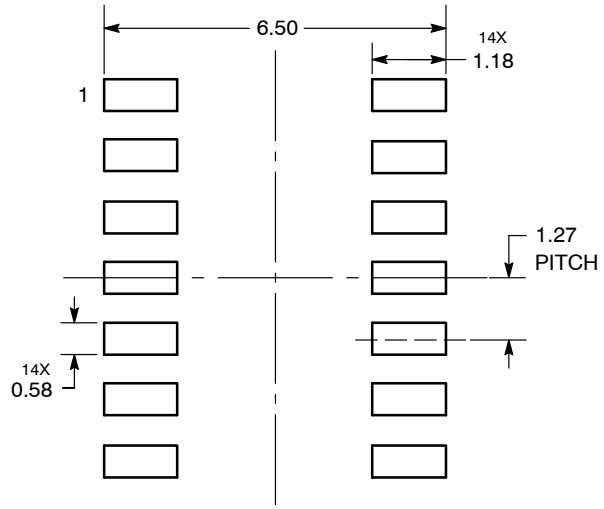

DIMENSIONS: MILLIMETERS

*For additional information on our Pb−Free strategy and soldering details, please download the ON Semiconductor Soldering and Mounting Techniques Reference Manual, SOLDERRM/D.

GENERIC MARKING DIAGRAM*

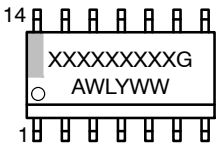

XXXXX = Specific Device Code
A = Assembly Location
WL = Wafer Lot
Y = Year
WW = Work Week
G = Pb−Free Package

*This information is generic. Please refer to device data sheet for actual part marking. Pb−Free indicator, “G” or microdot “▪”, may or may not be present. Some products may not follow the Generic Marking.

STYLES ON PAGE 2

DOCUMENT NUMBER:	**98ASB42565B**	Electronic versions are uncontrolled except when accessed directly from the Document Repository. Printed versions are uncontrolled except when stamped “CONTROLLED COPY” in red.	
DESCRIPTION:	**SOIC−14 NB**		**PAGE 1 OF 2**

onsemi and onsemi are trademarks of Semiconductor Components Industries, LLC dba **onsemi** or its subsidiaries in the United States and/or other countries. **onsemi** reserves the right to make changes without further notice to any products herein. **onsemi** makes no warranty, representation or guarantee regarding the suitability of its products for any particular purpose, nor does **onsemi** assume any liability arising out of the application or use of any product or circuit, and specifically disclaims any and all liability, including without limitation special, consequential or incidental damages. **onsemi** does not convey any license under its patent rights nor the rights of others.

© Semiconductor Components Industries, LLC, 2019

SOIC−14
CASE 751A−03
ISSUE L

DATE 03 FEB 2016

STYLE 1:
PIN 1. COMMON CATHODE
2. ANODE/CATHODE
3. ANODE/CATHODE
4. NO CONNECTION
5. ANODE/CATHODE
6. NO CONNECTION
7. ANODE/CATHODE
8. ANODE/CATHODE
9. ANODE/CATHODE
10. NO CONNECTION
11. ANODE/CATHODE
12. ANODE/CATHODE
13. NO CONNECTION
14. COMMON ANODE

STYLE 2:
CANCELLED

STYLE 3:
PIN 1. NO CONNECTION
2. ANODE
3. ANODE
4. NO CONNECTION
5. ANODE
6. NO CONNECTION
7. ANODE
8. ANODE
9. ANODE
10. NO CONNECTION
11. ANODE
12. ANODE
13. NO CONNECTION
14. COMMON CATHODE

STYLE 4:
PIN 1. NO CONNECTION
2. CATHODE
3. CATHODE
4. NO CONNECTION
5. CATHODE
6. NO CONNECTION
7. CATHODE
8. CATHODE
9. CATHODE
10. NO CONNECTION
11. CATHODE
12. CATHODE
13. NO CONNECTION
14. COMMON ANODE

STYLE 5:
PIN 1. COMMON CATHODE
2. ANODE/CATHODE
3. ANODE/CATHODE
4. ANODE/CATHODE
5. ANODE/CATHODE
6. NO CONNECTION
7. COMMON ANODE
8. COMMON CATHODE
9. ANODE/CATHODE
10. ANODE/CATHODE
11. ANODE/CATHODE
12. ANODE/CATHODE
13. NO CONNECTION
14. COMMON ANODE

STYLE 6:
PIN 1. CATHODE
2. CATHODE
3. CATHODE
4. CATHODE
5. CATHODE
6. CATHODE
7. CATHODE
8. ANODE
9. ANODE
10. ANODE
11. ANODE
12. ANODE
13. ANODE
14. ANODE

STYLE 7:
PIN 1. ANODE/CATHODE
2. COMMON ANODE
3. COMMON CATHODE
4. ANODE/CATHODE
5. ANODE/CATHODE
6. ANODE/CATHODE
7. ANODE/CATHODE
8. ANODE/CATHODE
9. ANODE/CATHODE
10. ANODE/CATHODE
11. COMMON CATHODE
12. COMMON ANODE
13. ANODE/CATHODE
14. ANODE/CATHODE

STYLE 8:
PIN 1. COMMON CATHODE
2. ANODE/CATHODE
3. ANODE/CATHODE
4. NO CONNECTION
5. ANODE/CATHODE
6. ANODE/CATHODE
7. COMMON ANODE
8. COMMON ANODE
9. ANODE/CATHODE
10. ANODE/CATHODE
11. NO CONNECTION
12. ANODE/CATHODE
13. ANODE/CATHODE
14. COMMON CATHODE

onsemi and ONSEMI. are trademarks of Semiconductor Components Industries, LLC dba **onsemi** or its subsidiaries in the United States and/or other countries. **onsemi** reserves the right to make changes without further notice to any products herein. **onsemi** makes no warranty, representation or guarantee regarding the suitability of its products for any particular purpose, nor does **onsemi** assume any liability arising out of the application or use of any product or circuit, and specifically disclaims any and all liability, including without limitation special, consequential or incidental damages. **onsemi** does not convey any license under its patent rights nor the rights of others.

© Semiconductor Components Industries, LLC, 2019

MECHANICAL CASE OUTLINE
PACKAGE DIMENSIONS

TSSOP−14 WB
CASE 948G
ISSUE C

DATE 17 FEB 2016

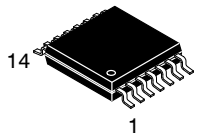

SCALE 2:1

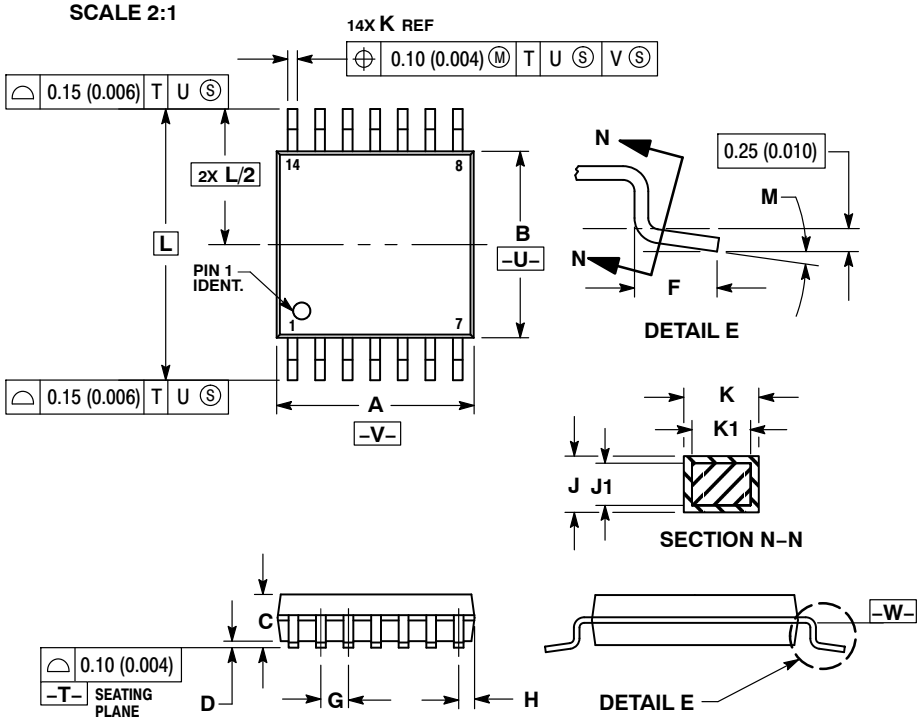

NOTES:
1. DIMENSIONING AND TOLERANCING PER ANSI Y14.5M, 1982.
2. CONTROLLING DIMENSION: MILLIMETER.
3. DIMENSION A DOES NOT INCLUDE MOLD FLASH, PROTRUSIONS OR GATE BURRS. MOLD FLASH OR GATE BURRS SHALL NOT EXCEED 0.15 (0.006) PER SIDE.
4. DIMENSION B DOES NOT INCLUDE INTERLEAD FLASH OR PROTRUSION. INTERLEAD FLASH OR PROTRUSION SHALL NOT EXCEED 0.25 (0.010) PER SIDE.
5. DIMENSION K DOES NOT INCLUDE DAMBAR PROTRUSION. ALLOWABLE DAMBAR PROTRUSION SHALL BE 0.08 (0.003) TOTAL IN EXCESS OF THE K DIMENSION AT MAXIMUM MATERIAL CONDITION.
6. TERMINAL NUMBERS ARE SHOWN FOR REFERENCE ONLY.
7. DIMENSION A AND B ARE TO BE DETERMINED AT DATUM PLANE −W−.

	MILLIMETERS		INCHES	
DIM	MIN	MAX	MIN	MAX
A	4.90	5.10	0.193	0.200
B	4.30	4.50	0.169	0.177
C	−−−	1.20	−−−	0.047
D	0.05	0.15	0.002	0.006
F	0.50	0.75	0.020	0.030
G	0.65 BSC		0.026 BSC	
H	0.50	0.60	0.020	0.024
J	0.09	0.20	0.004	0.008
J1	0.09	0.16	0.004	0.006
K	0.19	0.30	0.007	0.012
K1	0.19	0.25	0.007	0.010
L	6.40 BSC		0.252 BSC	
M	0 °	8 °	0 °	8 °

SOLDERING FOOTPRINT

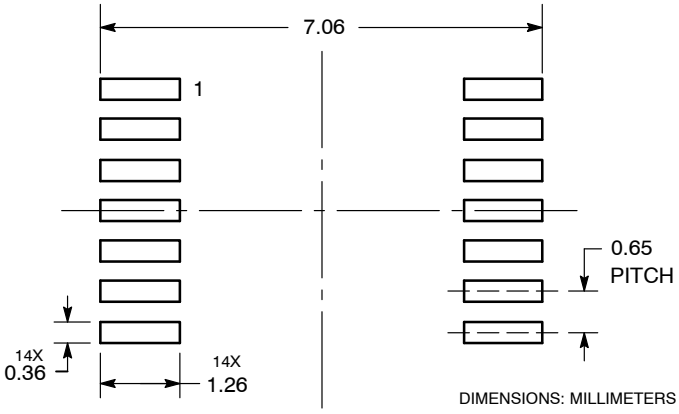

DIMENSIONS: MILLIMETERS

GENERIC MARKING DIAGRAM*

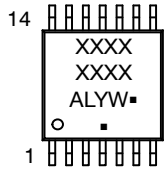

A = Assembly Location
L = Wafer Lot
Y = Year
W = Work Week
▪ = Pb−Free Package

(Note: Microdot may be in either location)

*This information is generic. Please refer to device data sheet for actual part marking. Pb−Free indicator, “G” or microdot “▪”, may or may not be present. Some products may not follow the Generic Marking.

DOCUMENT NUMBER:	**98ASH70246A**	Electronic versions are uncontrolled except when accessed directly from the Document Repository. Printed versions are uncontrolled except when stamped “CONTROLLED COPY” in red.
DESCRIPTION:	**TSSOP−14 WB**	**PAGE 1 OF 1**

onsemi and onsemi are trademarks of Semiconductor Components Industries, LLC dba **onsemi** or its subsidiaries in the United States and/or other countries. **onsemi** reserves the right to make changes without further notice to any products herein. **onsemi** makes no warranty, representation or guarantee regarding the suitability of its products for any particular purpose, nor does **onsemi** assume any liability arising out of the application or use of any product or circuit, and specifically disclaims any and all liability, including without limitation special, consequential or incidental damages. **onsemi** does not convey any license under its patent rights nor the rights of others.

© Semiconductor Components Industries, LLC, 2019

onsemi, , and other names, marks, and brands are registered and/or common law trademarks of Semiconductor Components Industries, LLC dba "**onsemi**" or its affiliates and/or subsidiaries in the United States and/or other countries. **onsemi** owns the rights to a number of patents, trademarks, copyrights, trade secrets, and other intellectual property. A listing of **onsemi**'s product/patent coverage may be accessed at www.onsemi.com/site/pdf/Patent−Marking.pdf. **onsemi** reserves the right to make changes at any time to any products or information herein, without notice. The information herein is provided "as−is" and **onsemi** makes no warranty, representation or guarantee regarding the accuracy of the information, product features, availability, functionality, or suitability of its products for any particular purpose, nor does **onsemi** assume any liability arising out of the application or use of any product or circuit, and specifically disclaims any and all liability, including without limitation special, consequential or incidental damages. Buyer is responsible for its products and applications using **onsemi** products, including compliance with all laws, regulations and safety requirements or standards, regardless of any support or applications information provided by **onsemi**. "Typical" parameters which may be provided in **onsemi** data sheets and/or specifications can and do vary in different applications and actual performance may vary over time. All operating parameters, including "Typicals" must be validated for each customer application by customer's technical experts. **onsemi** does not convey any license under any of its intellectual property rights nor the rights of others. **onsemi** products are not designed, intended, or authorized for use as a critical component in life support systems or any FDA Class 3 medical devices or medical devices with a same or similar classification in a foreign jurisdiction or any devices intended for implantation in the human body. Should Buyer purchase or use **onsemi** products for any such unintended or unauthorized application, Buyer shall indemnify and hold **onsemi** and its officers, employees, subsidiaries, affiliates, and distributors harmless against all claims, costs, damages, and expenses, and reasonable attorney fees arising out of, directly or indirectly, any claim of personal injury or death associated with such unintended or unauthorized use, even if such claim alleges that **onsemi** was negligent regarding the design or manufacture of the part. **onsemi** is an Equal Opportunity/Affirmative Action Employer. This literature is subject to all applicable copyright laws and is not for resale in any manner.

ADDITIONAL INFORMATION

TECHNICAL PUBLICATIONS:
Technical Library: www.onsemi.com/design/resources/technical−documentation
onsemi Website: www.onsemi.com

ONLINE SUPPORT: www.onsemi.com/support
For additional information, please contact your local Sales Representative at www.onsemi.com/support/sales