Thank you for your interest in **onsemi** products.

Your technical document begins on the following pages.

Your Feedback is Important to Us!

Please take a moment to participate in our short survey.
At **onsemi**, we are dedicated to delivering technical content that best meets your needs.

Help Us Improve – Take the Survey

This survey is intended to collect your feedback, capture any issues you may encounter, and to provide improvements you would like to suggest.

We look forward to your feedback.

To learn more about **onsemi**, please visit our website at
www.onsemi.com

onsemi and onsemi and other names, marks, and brands are registered and/or common law trademarks of Semiconductor Components Industries, LLC dba "**onsemi**" or its affiliates and/or subsidiaries in the United States and/or other countries. **onsemi** owns the rights to a number of patents, trademarks, copyrights, trade secrets, and other intellectual property. A listing of **onsemi** product/patent coverage may be accessed at www.onsemi.com/site/pdf/Patent-Marking.pdf. **onsemi** reserves the right to make changes at any time to any products or information herein, without notice. The information herein is provided "as-is" and **onsemi** makes no warranty, representation or guarantee regarding the accuracy of the information, product features, availability, functionality, or suitability of its products for any particular purpose, nor does **onsemi** assume any liability arising out of the application or use of any product or circuit, and specifically disclaims any and all liability, including without limitation special, consequential or incidental damages. Buyer is responsible for its products and applications using **onsemi** products, including compliance with all laws, regulations and safety requirements or standards, regardless of any support or applications information provided by **onsemi**. "Typical" parameters which may be provided in **onsemi** data sheets and/or specifications can and do vary in different applications and actual performance may vary over time. All operating parameters, including "Typicals" must be validated for each customer application by customer's technical experts. **onsemi** does not convey any license under any of its intellectual property rights nor the rights of others. **onsemi** products are not designed, intended, or authorized for use as a critical component in life support systems or any FDA Class 3 medical devices or medical devices with a same or similar classification in a foreign jurisdiction or any devices intended for implantation in the human body. Should Buyer purchase or use **onsemi** products for any such unintended or unauthorized application, Buyer shall indemnify and hold **onsemi** and its officers, employees, subsidiaries, affiliates, and distributors harmless against all claims, costs, damages, and expenses, and reasonable attorney fees arising out of, directly or indirectly, any claim of personal injury or death associated with such unintended or unauthorized use, even if such claim alleges that **onsemi** was negligent regarding the design or manufacture of the part. **onsemi** is an Equal Opportunity/Affirmative Action Employer. This literature is subject to all applicable copyright laws and is not for resale in any manner. Other names and brands may be claimed as the property of others.

Low Offset Voltage Dual Comparators

LM393, LM393E, LM293, LM2903, LM2903E, LM2903V, NCV2903

The LM393 series are dual independent precision voltage comparators capable of single or split supply operation. These devices are designed to permit a common mode range−to−ground level with single supply operation. Input offset voltage specifications as low as 2.0 mV make this device an excellent selection for many applications in consumer, automotive, and industrial electronics.

Features

- Wide Single−Supply Range: 2.0 Vdc to 36 Vdc
- Split−Supply Range: ±1.0 Vdc to ±18 Vdc
- Very Low Current Drain Independent of Supply Voltage: 0.4 mA
- Low Input Bias Current: 25 nA
- Low Input Offset Current: 5.0 nA
- Low Input Offset Voltage: 5.0 mV (max) LM293/393
- Input Common Mode Range to Ground Level
- Differential Input Voltage Range Equal to Power Supply Voltage
- Output Voltage Compatible with DTL, ECL, TTL, MOS, and CMOS Logic Levels
- ESD Clamps on the Inputs Increase the Ruggedness of the Device without Affecting Performance
- NCV Prefix for Automotive and Other Applications Requiring Unique Site and Control Change Requirements; AEC−Q100 Qualified and PPAP Capable
- These Devices are Pb−Free, Halogen Free/BFR Free and are RoHS Compliant

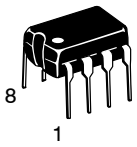

PDIP−8
N SUFFIX
CASE 626



SOIC−8
D SUFFIX
CASE 751



Micro8™
DM SUFFIX
CASE 846A

PIN CONNECTIONS

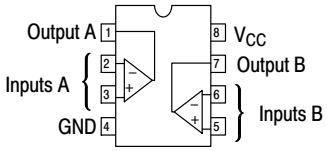

(Top View)

DEVICE MARKING AND ORDERING INFORMATION

See detailed marking information and ordering and shipping information on page 7 of this data sheet.

© Semiconductor Components Industries, LLC, 2016

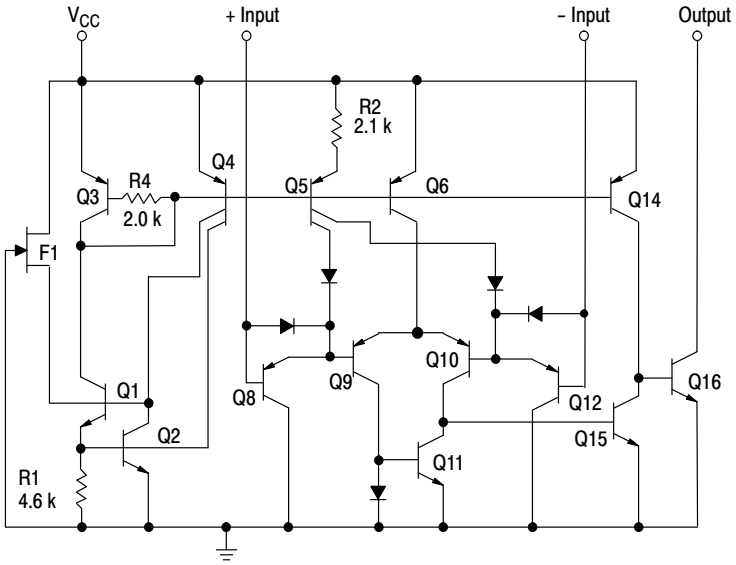

Figure 1. Representative Schematic Diagram

(Diagram shown is for 1 comparator)

MAXIMUM RATINGS

Rating	Symbol	Value	Unit
Power Supply Voltage	V_{CC}	+36 or ±18	V
Input Differential Voltage	V_{IDR}	36	V
Input Common Mode Voltage Range	V_{ICR}	−0.3 to +36	V
Output Voltage	V_O	36	V
Output Short Circuit−to−Ground Output Sink Current (Note 1)	I_{SC} I_{Sink}	Continuous 20	mA
Power Dissipation @ T_A = 25°C Derate above 25°C	P_D $1/R_{\theta JA}$	570 5.7	mW mW/°C
Operating Ambient Temperature Range LM293 LM393, LM393E LM2903, LM2903E LM2903V, NCV2903 (Note 2)	T_A	 −25 to +85 0 to +70 −40 to +105 −40 to +125	°C
Maximum Operating Junction Temperature LM393, LM393E, LM2903, LM2903E, LM2903V LM293, NCV2903	$T_{J(max)}$	 150 150	°C
Storage Temperature Range	T_{stg}	−65 to +150	°C

Stresses exceeding those listed in the Maximum Ratings table may damage the device. If any of these limits are exceeded, device functionality should not be assumed, damage may occur and reliability may be affected.

1. The maximum output current may be as high as 20 mA, independent of the magnitude of V_{CC}, output short circuits to V_{CC} can cause excessive heating and eventual destruction.
2. *NCV2903 is qualified for automotive use.*

ESD RATINGS

Rating	HBM	MM	Unit
ESD Protection at any Pin (Human Body Model − HBM, Machine Model − MM)			
NCV2903 (Note 2)	2000	200	V
LM393E, LM2903E	1500	150	V
LM393DG/DR2G, LM2903DG/DR2G	250	100	V
All Other Devices	1500	150	V

ELECTRICAL CHARACTERISTICS (V_{CC} = 5.0 Vdc, $T_{low} \le T_A \le T_{high}$, unless otherwise noted.)

Characteristic	Symbol	LM293, LM393, LM393E			LM2903/E/V, NCV2903			Unit
		Min	Typ	Max	Min	Typ	Max	
Input Offset Voltage (Note 4)	V_{IO}							mV
T_A = 25°C		–	±1.0	±5.0	–	±2.0	±7.0	
$T_{low} \le T_A \le T_{high}$		–	–	±9.0	–	±9.0	±15	
Input Offset Current	I_{IO}							nA
T_A = 25°C		–	±5.0	±50	–	±5.0	±50	
$T_{low} \le T_A \le T_{high}$		–	–	±150	–	±50	±200	
Input Bias Current (Note 5)	I_{IB}							nA
T_A = 25°C		–	20	250	–	20	250	
$T_{low} \le T_A \le T_{high}$		–	–	400	–	20	500	
Input Common Mode Voltage Range (Note 6)	V_{ICR}							V
T_A = 25°C		0	–	V_{CC} –1.5	0	–	V_{CC} –1.5	
$T_{low} \le T_A \le T_{high}$		0	–	V_{CC} –2.0	0	–	V_{CC} –2.0	
Voltage Gain $R_L \ge 15$ kΩ, V_{CC} = 15 Vdc, T_A = 25°C	A_{VOL}	50	200	–	25	200	–	V/mV
Large Signal Response Time V_{in} = TTL Logic Swing, V_{ref} = 1.4 Vdc V_{RL} = 5.0 Vdc, R_L = 5.1 kΩ, T_A = 25°C	–	–	300	–	–	300	–	ns
Response Time (Note 7) V_{RL} = 5.0 Vdc, R_L = 5.1 kΩ, T_A = 25°C	t_{TLH}	–	1.3	–	–	1.5	–	μs
Input Differential Voltage (Note 8) All $V_{in} \ge$ GND or V– Supply (if used)	V_{ID}	–	–	V_{CC}	–	–	V_{CC}	V
Output Sink Current $V_{in} \ge 1.0$ Vdc, V_{in+} = 0 Vdc, $V_O \le 1.5$ Vdc T_A = 25°C	I_{Sink}	6.0	16	–	6.0	16	–	mA
Output Saturation Voltage	V_{OL}							mV
$V_{in} \ge 1.0$ Vdc, V_{in+} = 0, $I_{Sink} \le 4.0$ mA, T_A = 25°C		–	150	400	–	–	400	
$T_{low} \le T_A \le T_{high}$		–	–	700	–	200	700	
Output Leakage Current	I_{OL}							nA
V_{in-} = 0 V, $V_{in+} \ge 1.0$ Vdc, V_O = 5.0 Vdc, T_A = 25°C		–	0.1	–	–	0.1	–	
V_{in-} = 0 V, $V_{in+} \ge 1.0$ Vdc, V_O = 30 Vdc, $T_{low} \le T_A \le T_{high}$		–	–	1000	–	–	1000	
Supply Current	I_{CC}							mA
R_L = ∞ Both Comparators, T_A = 25°C		–	0.4	1.0	–	0.4	1.0	
R_L = ∞ Both Comparators, V_{CC} = 30 V		–	–	2.5	–	–	2.5	

Product parametric performance is indicated in the Electrical Characteristics for the listed test conditions, unless otherwise noted. Product performance may not be indicated by the Electrical Characteristics if operated under different conditions.

LM293 T_{low} = –25°C, T_{high} = +85°C
LM393, LM393E T_{low} = 0°C, T_{high} = +70°C
LM2903, LM2903E T_{low} = –40°C, T_{high} = +105°C
LM2903V & NCV2903 T_{low} = –40°C, T_{high} = +125°C
NCV2903 is qualified for automotive use.

3. The maximum output current may be as high as 20 mA, independent of the magnitude of V_{CC}, output short circuits to V_{CC} can cause excessive heating and eventual destruction.
4. At output switch point, $V_O \simeq 1.4$ Vdc, R_S = 0 Ω with V_{CC} from 5.0 Vdc to 30 Vdc, and over the full input common mode range (0 V to V_{CC} = –1.5 V).
5. Due to the PNP transistor inputs, bias current will flow out of the inputs. This current is essentially constant, independent of the output state, therefore, no loading changes will exist on the input lines.
6. Input common mode of either input should not be permitted to go more than 0.3 V negative of ground or minus supply. The upper limit of common mode range is V_{CC} –1.5 V.
7. Response time is specified with a 100 mV step and 5.0 mV of overdrive. With larger magnitudes of overdrive faster response times are obtainable.
8. The comparator will exhibit proper output state if one of the inputs becomes greater than V_{CC}, the other input must remain within the common mode range. The low input state must not be less than –0.3 V of ground or minus supply.

LM293/393

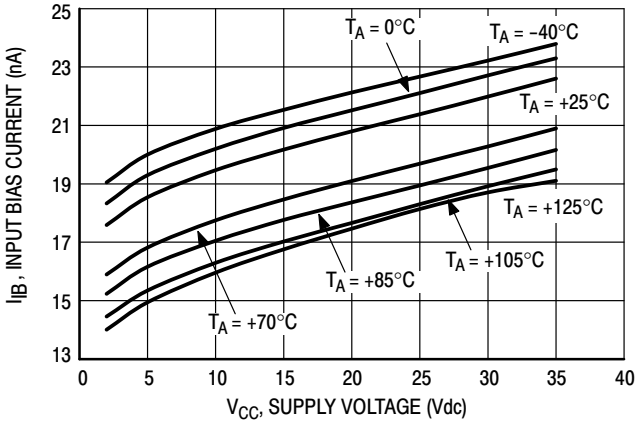

Figure 2. Input Bias Current versus Power Supply Voltage

LM2903

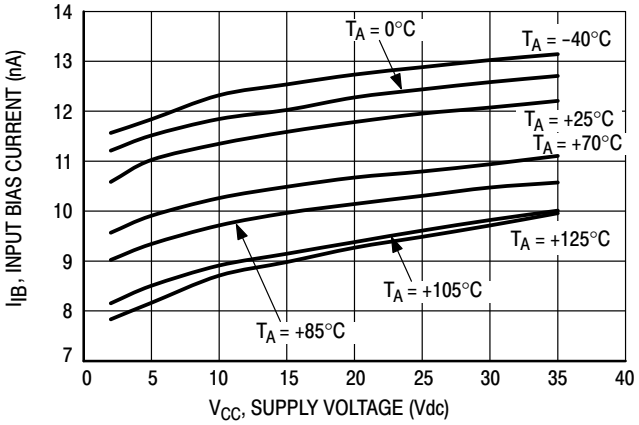

Figure 3. Input Bias Current versus Power Supply Voltage

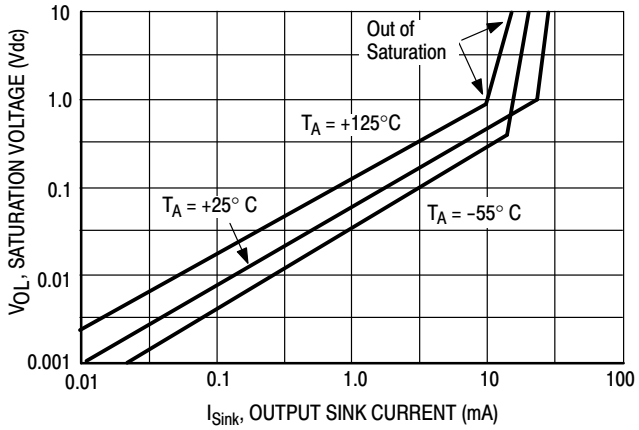

Figure 4. Output Saturation Voltage versus Output Sink Current

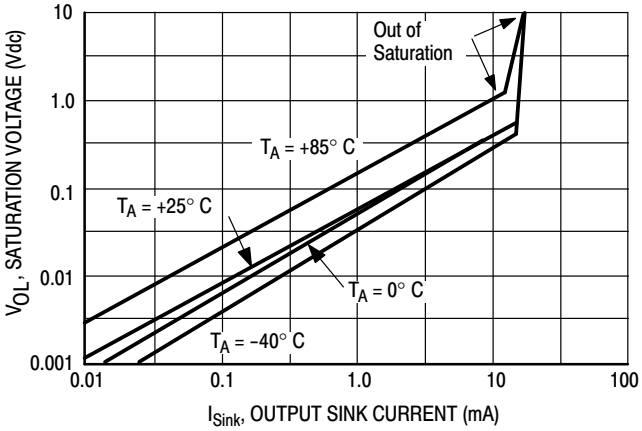

Figure 5. Output Saturation Voltage versus Output Sink Current

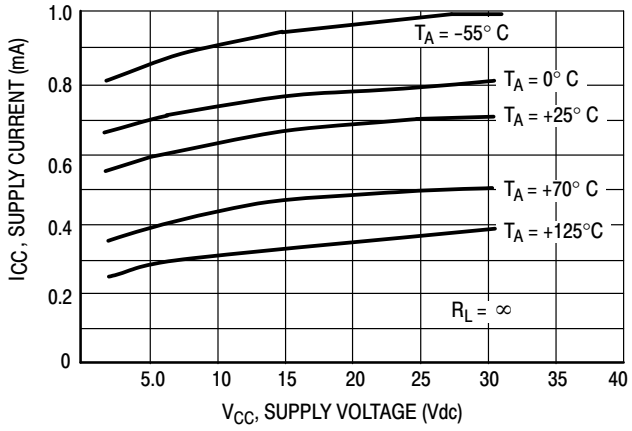

Figure 6. Power Supply Current versus Power Supply Voltage

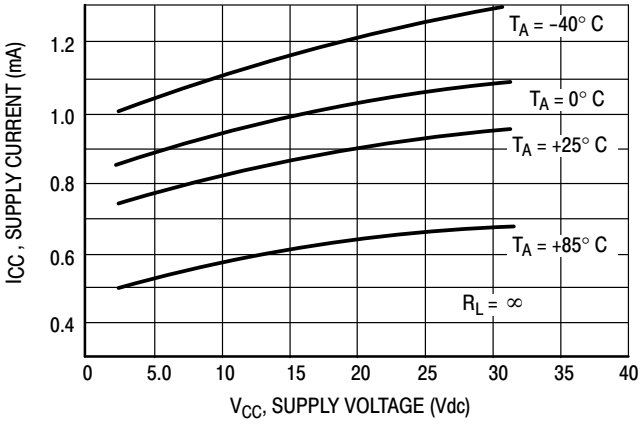

Figure 7. Power Supply Current versus Power Supply Voltage

APPLICATIONS INFORMATION

These dual comparators feature high gain, wide bandwidth characteristics. This gives the device oscillation tendencies if the outputs are capacitively coupled to the inputs via stray capacitance. This oscillation manifests itself during output transitions (V_{OL} to V_{OH}). To alleviate this situation, input resistors < 10 kΩ should be used.

The addition of positive feedback (< 10 mV) is also recommended. It is good design practice to ground all unused pins.

Differential input voltages may be larger than supply voltage without damaging the comparator's inputs. Voltages more negative than −0.3 V should not be used.

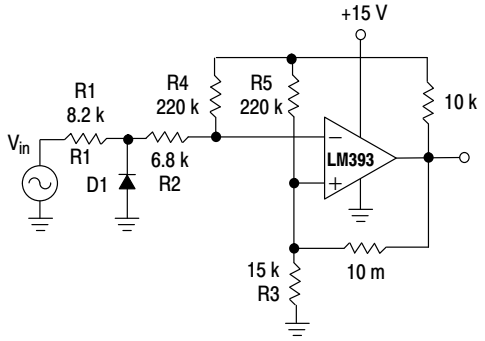

D1 prevents input from going negative by more than 0.6 V.

$$R1 + R2 = R3$$

$$R3 \leq \frac{R5}{10}$$ for small error in zero crossing.

Figure 8. Zero Crossing Detector (Single Supply)

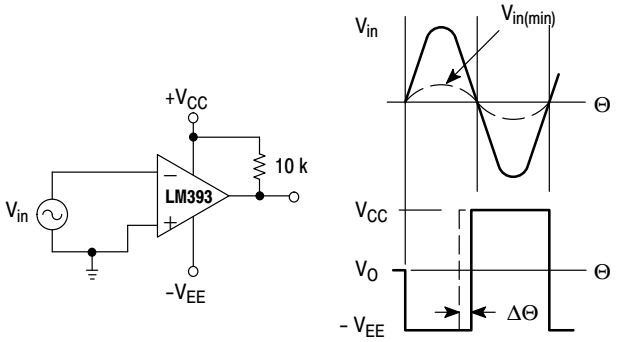

$V_{in(min)} \approx$ 0.4 V peak for 1% phase distortion (ΔΘ).

Figure 9. Zero Crossing Detector (Split Supply)

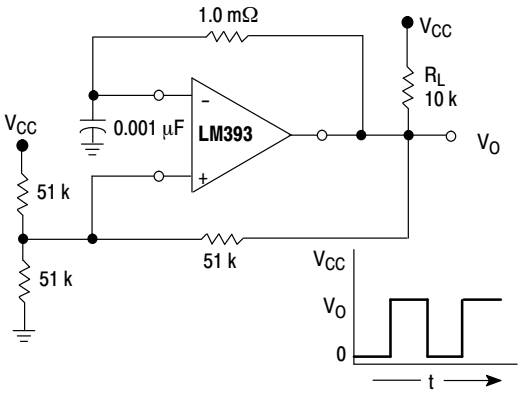

Figure 10. Free−Running Square−Wave Oscillator

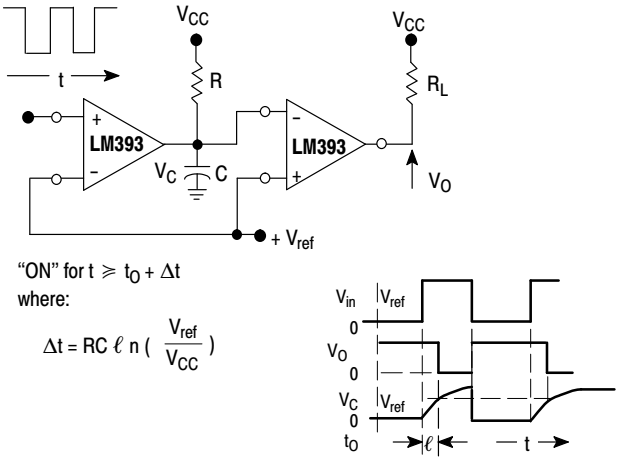

"ON" for $t \geq t_O + \Delta t$
where:

$$\Delta t = RC\,\ell n\left(\frac{V_{ref}}{V_{CC}}\right)$$

Figure 11. Time Delay Generator

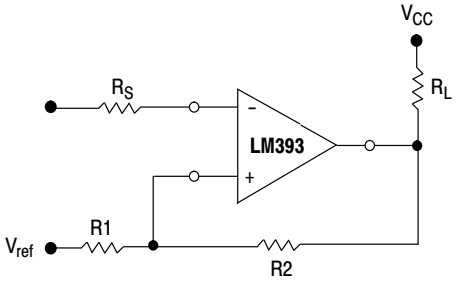

$$R_S = R1 \,||\, R2$$

$$V_{th1} = V_{ref} + \frac{(V_{CC} - V_{ref})\,R1}{R1 + R2 + R_L}$$

$$V_{th2} = V_{ref} - \frac{(V_{ref} - V_O\ \text{Low})\,R1}{R1 + R2}$$

Figure 12. Comparator with Hysteresis

MARKING DIAGRAMS

PDIP−8
CASE 626

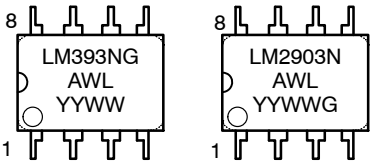

Micro8
CASE 846A

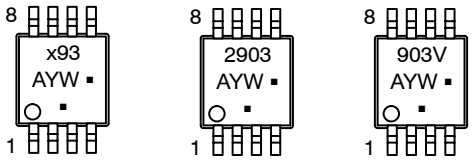

SOIC−8
CASE 751

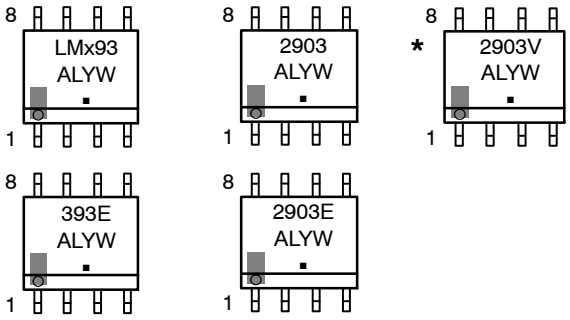

x	= 2 or 3
A	= Assembly Location
WL, L	= Wafer Lot
YY, Y	= Year
WW, W	= Work Week
▪, G	= Pb−Free Package

(Note: Microdot may be in either location)

*This marking diagram also applies to NCV2903DR2G

ORDERING INFORMATION

Device	Operating Temperature Range	Package	Shipping†
LM293DG	−25°C to +85°C	SOIC−8 (Pb−Free)	98 Units / Rail
LM293DR2G			2500 / Tape & Reel
LM293DMR2G		Micro8 (Pb−Free)	4000 / Tape and Reel
LM393DG	0°C to +70°C	SOIC−8 (Pb−Free)	98 Units / Rail
LM393DR2G			2500 / Tape & Reel
LM393EDR2G		SOIC−8 (Pb−Free)	2500 / Tape & Reel
LM393NG		PDIP−8 (Pb−Free)	50 Units / Rail
LM393DMR2G		Micro8 (Pb−Free)	4000 / Tape and Reel
LM2903DG	−40°C to +105°C	SOIC−8 (Pb−Free)	98 Units / Rail
LM2903DR2G			2500 / Tape & Reel
LM2903EDR2G		SOIC−8 (Pb−Free)	2500 / Tape & Reel
LM2903DMR2G		Micro8 (Pb−Free)	4000 / Tape and Reel
LM2903NG		PDIP−8 (Pb−Free)	50 Units / Rail
LM2903VDG	−40°C to +125°C	SOIC−8 (Pb−Free)	98 Units / Rail
LM2903VDR2G			2500 / Tape & Reel
LM2903VNG		PDIP−8 (Pb−Free)	50 Units / Rail
NCV2903DR2G*		SOIC−8 (Pb−Free)	2500 / Tape & Reel
NCV2903DMR2G*		Micro8 (Pb−Free)	4000 / Tape & Reel

†For information on tape and reel specifications, including part orientation and tape sizes, please refer to our Tape and Reel Packaging Specifications Brochure, BRD8011/D.

*NCV Prefix for Automotive and Other Applications Requiring Unique Site and Control Change Requirements; AEC−Q100 Qualified and PPAP Capable.

MECHANICAL CASE OUTLINE
PACKAGE DIMENSIONS

ON Semiconductor®



SCALE 1:1

PDIP–8
CASE 626–05
ISSUE P

DATE 22 APR 2015

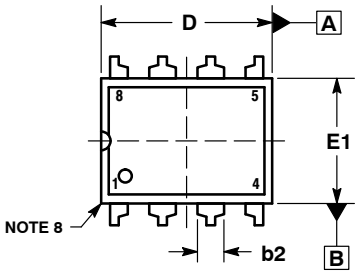

TOP VIEW

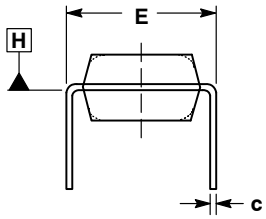

END VIEW
WITH LEADS CONSTRAINED
NOTE 5

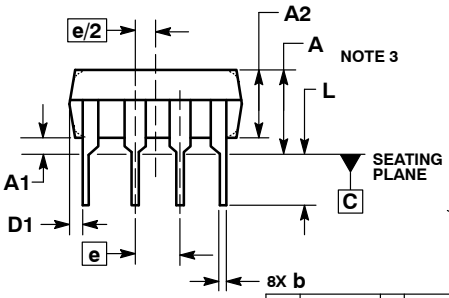

SIDE VIEW

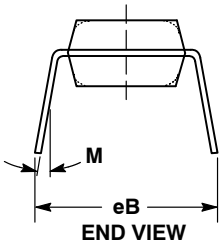

END VIEW
NOTE 6

NOTES:
1. DIMENSIONING AND TOLERANCING PER ASME Y14.5M, 1994.
2. CONTROLLING DIMENSION: INCHES.
3. DIMENSIONS A, A1 AND L ARE MEASURED WITH THE PACKAGE SEATED IN JEDEC SEATING PLANE GAUGE GS–3.
4. DIMENSIONS D, D1 AND E1 DO NOT INCLUDE MOLD FLASH OR PROTRUSIONS. MOLD FLASH OR PROTRUSIONS ARE NOT TO EXCEED 0.10 INCH.
5. DIMENSION E IS MEASURED AT A POINT 0.015 BELOW DATUM PLANE H WITH THE LEADS CONSTRAINED PERPENDICULAR TO DATUM C.
6. DIMENSION eB IS MEASURED AT THE LEAD TIPS WITH THE LEADS UNCONSTRAINED.
7. DATUM PLANE H IS COINCIDENT WITH THE BOTTOM OF THE LEADS, WHERE THE LEADS EXIT THE BODY.
8. PACKAGE CONTOUR IS OPTIONAL (ROUNDED OR SQUARE CORNERS).

	INCHES		MILLIMETERS	
DIM	MIN	MAX	MIN	MAX
A	----	0.210	---	5.33
A1	0.015	----	0.38	---
A2	0.115	0.195	2.92	4.95
b	0.014	0.022	0.35	0.56
b2	0.060 TYP		1.52 TYP	
C	0.008	0.014	0.20	0.36
D	0.355	0.400	9.02	10.16
D1	0.005	----	0.13	---
E	0.300	0.325	7.62	8.26
E1	0.240	0.280	6.10	7.11
e	0.100 BSC		2.54 BSC	
eB	----	0.430	---	10.92
L	0.115	0.150	2.92	3.81
M	----	10°	---	10°

STYLE 1:
PIN 1. AC IN
2. DC + IN
3. DC – IN
4. AC IN
5. GROUND
6. OUTPUT
7. AUXILIARY
8. V_{CC}

GENERIC MARKING DIAGRAM*

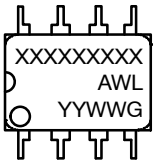

XXXX = Specific Device Code
A = Assembly Location
WL = Wafer Lot
YY = Year
WW = Work Week
G = Pb–Free Package

*This information is generic. Please refer to device data sheet for actual part marking. Pb–Free indicator, “G” or microdot “ ▪”, may or may not be present.

DOCUMENT NUMBER:	98ASB42420B	Electronic versions are uncontrolled except when accessed directly from the Document Repository. Printed versions are uncontrolled except when stamped “CONTROLLED COPY” in red.
DESCRIPTION:	PDIP–8	PAGE 1 OF 1

ON Semiconductor and ON are trademarks of Semiconductor Components Industries, LLC dba ON Semiconductor or its subsidiaries in the United States and/or other countries. ON Semiconductor reserves the right to make changes without further notice to any products herein. ON Semiconductor makes no warranty, representation or guarantee regarding the suitability of its products for any particular purpose, nor does ON Semiconductor assume any liability arising out of the application or use of any product or circuit, and specifically disclaims any and all liability, including without limitation special, consequential or incidental damages. ON Semiconductor does not convey any license under its patent rights nor the rights of others.

© Semiconductor Components Industries, LLC, 2019

MECHANICAL CASE OUTLINE
PACKAGE DIMENSIONS



SCALE 1:1

SOIC−8 NB
CASE 751−07
ISSUE AK

DATE 16 FEB 2011

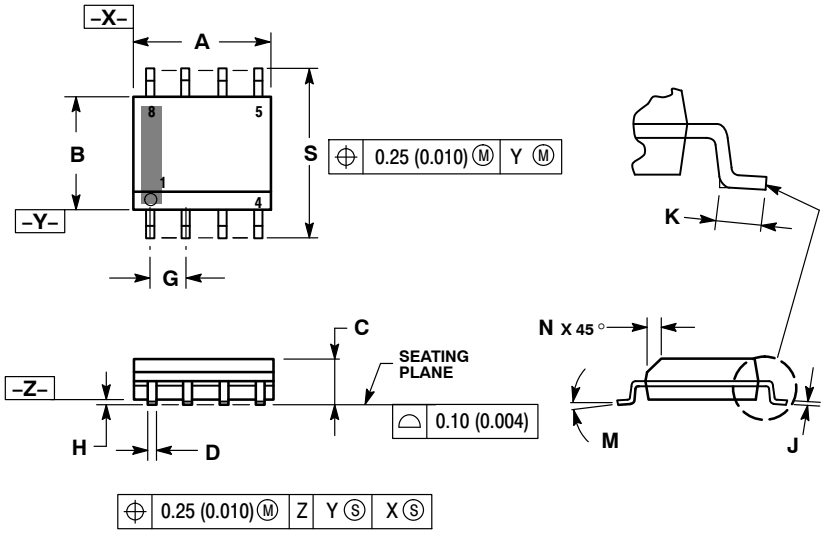

NOTES:
1. DIMENSIONING AND TOLERANCING PER ANSI Y14.5M, 1982.
2. CONTROLLING DIMENSION: MILLIMETER.
3. DIMENSION A AND B DO NOT INCLUDE MOLD PROTRUSION.
4. MAXIMUM MOLD PROTRUSION 0.15 (0.006) PER SIDE.
5. DIMENSION D DOES NOT INCLUDE DAMBAR PROTRUSION. ALLOWABLE DAMBAR PROTRUSION SHALL BE 0.127 (0.005) TOTAL IN EXCESS OF THE D DIMENSION AT MAXIMUM MATERIAL CONDITION.
6. 751−01 THRU 751−06 ARE OBSOLETE. NEW STANDARD IS 751−07.

	MILLIMETERS		INCHES	
DIM	MIN	MAX	MIN	MAX
A	4.80	5.00	0.189	0.197
B	3.80	4.00	0.150	0.157
C	1.35	1.75	0.053	0.069
D	0.33	0.51	0.013	0.020
G	1.27 BSC		0.050 BSC	
H	0.10	0.25	0.004	0.010
J	0.19	0.25	0.007	0.010
K	0.40	1.27	0.016	0.050
M	0 °	8 °	0 °	8 °
N	0.25	0.50	0.010	0.020
S	5.80	6.20	0.228	0.244

SOLDERING FOOTPRINT*

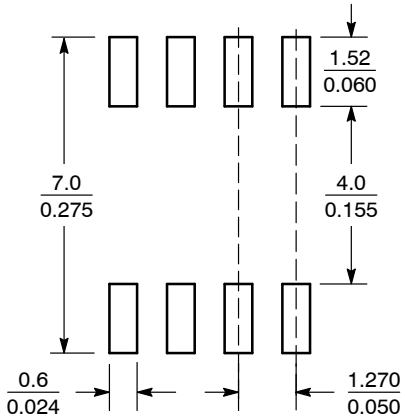

SCALE 6:1 (mm / inches)

*For additional information on our Pb−Free strategy and soldering details, please download the ON Semiconductor Soldering and Mounting Techniques Reference Manual, SOLDERRM/D.

GENERIC MARKING DIAGRAM*

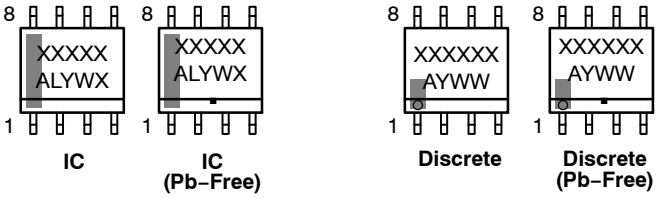

IC | IC (Pb−Free) | Discrete | Discrete (Pb−Free)

XXXXX = Specific Device Code
A = Assembly Location
L = Wafer Lot
Y = Year
W = Work Week
▪ = Pb−Free Package

XXXXXX = Specific Device Code
A = Assembly Location
Y = Year
WW = Work Week
▪ = Pb−Free Package

*This information is generic. Please refer to device data sheet for actual part marking. Pb−Free indicator, "G" or microdot "▪", may or may not be present. Some products may not follow the Generic Marking.

STYLES ON PAGE 2

DOCUMENT NUMBER:	**98ASB42564B**	Electronic versions are uncontrolled except when accessed directly from the Document Repository. Printed versions are uncontrolled except when stamped "CONTROLLED COPY" in red.
DESCRIPTION:	**SOIC−8 NB**	**PAGE 1 OF 2**

onsemi and onsemi are trademarks of Semiconductor Components Industries, LLC dba **onsemi** or its subsidiaries in the United States and/or other countries. **onsemi** reserves the right to make changes without further notice to any products herein. **onsemi** makes no warranty, representation or guarantee regarding the suitability of its products for any particular purpose, nor does **onsemi** assume any liability arising out of the application or use of any product or circuit, and specifically disclaims any and all liability, including without limitation special, consequential or incidental damages. **onsemi** does not convey any license under its patent rights nor the rights of others.

© Semiconductor Components Industries, LLC, 2019

SOIC−8 NB
CASE 751−07
ISSUE AK

DATE 16 FEB 2011

STYLE 1:
PIN 1. EMITTER
2. COLLECTOR
3. COLLECTOR
4. EMITTER
5. EMITTER
6. BASE
7. BASE
8. EMITTER

STYLE 2:
PIN 1. COLLECTOR, DIE, #1
2. COLLECTOR, #1
3. COLLECTOR, #2
4. COLLECTOR, #2
5. BASE, #2
6. EMITTER, #2
7. BASE, #1
8. EMITTER, #1

STYLE 3:
PIN 1. DRAIN, DIE #1
2. DRAIN, #1
3. DRAIN, #2
4. DRAIN, #2
5. GATE, #2
6. SOURCE, #2
7. GATE, #1
8. SOURCE, #1

STYLE 4:
PIN 1. ANODE
2. ANODE
3. ANODE
4. ANODE
5. ANODE
6. ANODE
7. ANODE
8. COMMON CATHODE

STYLE 5:
PIN 1. DRAIN
2. DRAIN
3. DRAIN
4. DRAIN
5. GATE
6. GATE
7. SOURCE
8. SOURCE

STYLE 6:
PIN 1. SOURCE
2. DRAIN
3. DRAIN
4. SOURCE
5. SOURCE
6. GATE
7. GATE
8. SOURCE

STYLE 7:
PIN 1. INPUT
2. EXTERNAL BYPASS
3. THIRD STAGE SOURCE
4. GROUND
5. DRAIN
6. GATE 3
7. SECOND STAGE Vd
8. FIRST STAGE Vd

STYLE 8:
PIN 1. COLLECTOR, DIE #1
2. BASE, #1
3. BASE, #2
4. COLLECTOR, #2
5. COLLECTOR, #2
6. EMITTER, #2
7. EMITTER, #1
8. COLLECTOR, #1

STYLE 9:
PIN 1. EMITTER, COMMON
2. COLLECTOR, DIE #1
3. COLLECTOR, DIE #2
4. EMITTER, COMMON
5. EMITTER, COMMON
6. BASE, DIE #2
7. BASE, DIE #1
8. EMITTER, COMMON

STYLE 10:
PIN 1. GROUND
2. BIAS 1
3. OUTPUT
4. GROUND
5. GROUND
6. BIAS 2
7. INPUT
8. GROUND

STYLE 11:
PIN 1. SOURCE 1
2. GATE 1
3. SOURCE 2
4. GATE 2
5. DRAIN 2
6. DRAIN 2
7. DRAIN 1
8. DRAIN 1

STYLE 12:
PIN 1. SOURCE
2. SOURCE
3. SOURCE
4. GATE
5. DRAIN
6. DRAIN
7. DRAIN
8. DRAIN

STYLE 13:
PIN 1. N.C.
2. SOURCE
3. SOURCE
4. GATE
5. DRAIN
6. DRAIN
7. DRAIN
8. DRAIN

STYLE 14:
PIN 1. N−SOURCE
2. N−GATE
3. P−SOURCE
4. P−GATE
5. P−DRAIN
6. P−DRAIN
7. N−DRAIN
8. N−DRAIN

STYLE 15:
PIN 1. ANODE 1
2. ANODE 1
3. ANODE 1
4. ANODE 1
5. CATHODE, COMMON
6. CATHODE, COMMON
7. CATHODE, COMMON
8. CATHODE, COMMON

STYLE 16:
PIN 1. EMITTER, DIE #1
2. BASE, DIE #1
3. EMITTER, DIE #2
4. BASE, DIE #2
5. COLLECTOR, DIE #2
6. COLLECTOR, DIE #2
7. COLLECTOR, DIE #1
8. COLLECTOR, DIE #1

STYLE 17:
PIN 1. VCC
2. V2OUT
3. V1OUT
4. TXE
5. RXE
6. VEE
7. GND
8. ACC

STYLE 18:
PIN 1. ANODE
2. ANODE
3. SOURCE
4. GATE
5. DRAIN
6. DRAIN
7. CATHODE
8. CATHODE

STYLE 19:
PIN 1. SOURCE 1
2. GATE 1
3. SOURCE 2
4. GATE 2
5. DRAIN 2
6. MIRROR 2
7. DRAIN 1
8. MIRROR 1

STYLE 20:
PIN 1. SOURCE (N)
2. GATE (N)
3. SOURCE (P)
4. GATE (P)
5. DRAIN
6. DRAIN
7. DRAIN
8. DRAIN

STYLE 21:
PIN 1. CATHODE 1
2. CATHODE 2
3. CATHODE 3
4. CATHODE 4
5. CATHODE 5
6. COMMON ANODE
7. COMMON ANODE
8. CATHODE 6

STYLE 22:
PIN 1. I/O LINE 1
2. COMMON CATHODE/VCC
3. COMMON CATHODE/VCC
4. I/O LINE 3
5. COMMON ANODE/GND
6. I/O LINE 4
7. I/O LINE 5
8. COMMON ANODE/GND

STYLE 23:
PIN 1. LINE 1 IN
2. COMMON ANODE/GND
3. COMMON ANODE/GND
4. LINE 2 IN
5. LINE 2 OUT
6. COMMON ANODE/GND
7. COMMON ANODE/GND
8. LINE 1 OUT

STYLE 24:
PIN 1. BASE
2. EMITTER
3. COLLECTOR/ANODE
4. COLLECTOR/ANODE
5. CATHODE
6. CATHODE
7. COLLECTOR/ANODE
8. COLLECTOR/ANODE

STYLE 25:
PIN 1. VIN
2. N/C
3. REXT
4. GND
5. IOUT
6. IOUT
7. IOUT
8. IOUT

STYLE 26:
PIN 1. GND
2. dv/dt
3. ENABLE
4. ILIMIT
5. SOURCE
6. SOURCE
7. SOURCE
8. VCC

STYLE 27:
PIN 1. ILIMIT
2. OVLO
3. UVLO
4. INPUT+
5. SOURCE
6. SOURCE
7. SOURCE
8. DRAIN

STYLE 28:
PIN 1. SW_TO_GND
2. DASIC_OFF
3. DASIC_SW_DET
4. GND
5. V_MON
6. VBULK
7. VBULK
8. VIN

STYLE 29:
PIN 1. BASE, DIE #1
2. EMITTER, #1
3. BASE, #2
4. EMITTER, #2
5. COLLECTOR, #2
6. COLLECTOR, #2
7. COLLECTOR, #1
8. COLLECTOR, #1

STYLE 30:
PIN 1. DRAIN 1
2. DRAIN 1
3. GATE 2
4. SOURCE 2
5. SOURCE 1/DRAIN 2
6. SOURCE 1/DRAIN 2
7. SOURCE 1/DRAIN 2
8. GATE 1

DOCUMENT NUMBER:	**98ASB42564B**	Electronic versions are uncontrolled except when accessed directly from the Document Repository. Printed versions are uncontrolled except when stamped "CONTROLLED COPY" in red.	
DESCRIPTION:	**SOIC−8 NB**		**PAGE 2 OF 2**

onsemi and ONSEMI. are trademarks of Semiconductor Components Industries, LLC dba **onsemi** or its subsidiaries in the United States and/or other countries. **onsemi** reserves the right to make changes without further notice to any products herein. **onsemi** makes no warranty, representation or guarantee regarding the suitability of its products for any particular purpose, nor does **onsemi** assume any liability arising out of the application or use of any product or circuit, and specifically disclaims any and all liability, including without limitation special, consequential or incidental damages. **onsemi** does not convey any license under its patent rights nor the rights of others.

© Semiconductor Components Industries, LLC, 2019

MECHANICAL CASE OUTLINE
PACKAGE DIMENSIONS

ON Semiconductor®

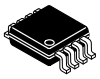

SCALE 2:1

Micro8
CASE 846A−02
ISSUE K

DATE 16 JUL 2020

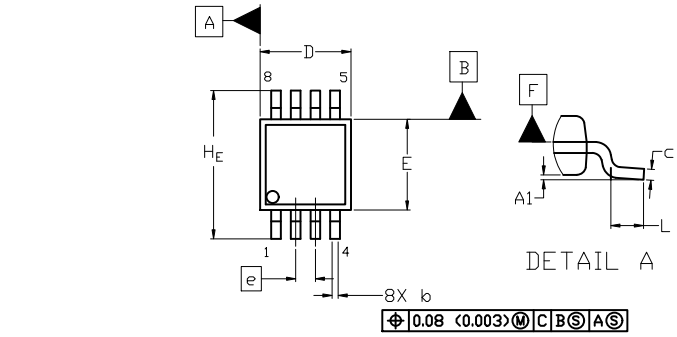

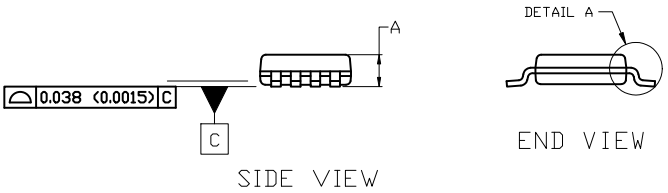

NOTES:

1. DIMENSIONING AND TOLERANCING PER ASME Y14.5M, 2009.
2. CONTROLLING DIMENSION: MILLIMETERS
3. DIMENSION b DOES NOT INCLUDE DAMBAR PROTRUSION. ALLOWABLE PROTRUSION SHALL BE 0.10 mm IN EXCESS OF MAXIMUM MATERIAL CONDITION.
4. DIMENSIONS D AND E DO NOT INCLUDE MOLD FLASH, PROTRUSION OR GATE BURRS. MOLD FLASH, PROTRUSIONS, OR GATE BURRS SHALL NOT EXCEED 0.15 mm PER SIDE. DIMENSION E DOES NOT INCLUDE INTERLEAD FLASH OR PROTRUSION. INTERLEAD FLASH OR PROTRUSION SHALL NOT EXCEED 0.25 mm PER SIDE. DIMENSIONS D AND E ARE DETERMINED AT DATUM F.
5. DATUMS A AND B ARE TO BE DETERMINED AT DATUM F.
6. A1 IS DEFINED AS THE VERTICAL DISTANCE FROM THE SEATING PLANE TO THE LOWEST POINT ON THE PACKAGE BODY.

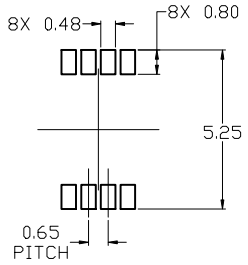

RECOMMENDED
MOUNTING FOOTPRINT

For additional information on our Pb-Free strategy and soldering details, please download the ON Semiconductor Soldering and Mounting Techniques Reference Manual, SOLDERRM/D.

DIM	MILLIMETERS		
	MIN.	NOM.	MAX.
A	---	---	1.10
A1	0.05	0.08	0.15
b	0.25	0.33	0.40
c	0.13	0.18	0.23
D	2.90	3.00	3.10
E	2.90	3.00	3.10
e	0.65 BSC		
H_E	4.75	4.90	5.05
L	0.40	0.55	0.70

GENERIC MARKING DIAGRAM*

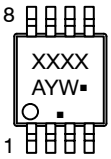

XXXX = Specific Device Code
A = Assembly Location
Y = Year
W = Work Week
▪ = Pb−Free Package

(Note: Microdot may be in either location)

*This information is generic. Please refer to device data sheet for actual part marking. Pb−Free indicator, “G” or microdot “▪”, may or may not be present. Some products may not follow the Generic Marking.

STYLE 1:
PIN 1. SOURCE
2. SOURCE
3. SOURCE
4. GATE
5. DRAIN
6. DRAIN
7. DRAIN
8. DRAIN

STYLE 2:
PIN 1. SOURCE 1
2. GATE 1
3. SOURCE 2
4. GATE 2
5. DRAIN 2
6. DRAIN 2
7. DRAIN 1
8. DRAIN 1

STYLE 3:
PIN 1. N-SOURCE
2. N-GATE
3. P-SOURCE
4. P-GATE
5. P-DRAIN
6. P-DRAIN
7. N-DRAIN
8. N-DRAIN

DOCUMENT NUMBER:	**98ASB14087C**	Electronic versions are uncontrolled except when accessed directly from the Document Repository. Printed versions are uncontrolled except when stamped “CONTROLLED COPY” in red.
DESCRIPTION:	**MICRO8**	**PAGE 1 OF 1**

ON Semiconductor and ON are trademarks of Semiconductor Components Industries, LLC dba ON Semiconductor or its subsidiaries in the United States and/or other countries. ON Semiconductor reserves the right to make changes without further notice to any products herein. ON Semiconductor makes no warranty, representation or guarantee regarding the suitability of its products for any particular purpose, nor does ON Semiconductor assume any liability arising out of the application or use of any product or circuit, and specifically disclaims any and all liability, including without limitation special, consequential or incidental damages. ON Semiconductor does not convey any license under its patent rights nor the rights of others.

© Semiconductor Components Industries, LLC, 2019

onsemi, , and other names, marks, and brands are registered and/or common law trademarks of Semiconductor Components Industries, LLC dba "**onsemi**" or its affiliates and/or subsidiaries in the United States and/or other countries. **onsemi** owns the rights to a number of patents, trademarks, copyrights, trade secrets, and other intellectual property. A listing of **onsemi**'s product/patent coverage may be accessed at www.onsemi.com/site/pdf/Patent−Marking.pdf. **onsemi** reserves the right to make changes at any time to any products or information herein, without notice. The information herein is provided "as−is" and **onsemi** makes no warranty, representation or guarantee regarding the accuracy of the information, product features, availability, functionality, or suitability of its products for any particular purpose, nor does **onsemi** assume any liability arising out of the application or use of any product or circuit, and specifically disclaims any and all liability, including without limitation special, consequential or incidental damages. Buyer is responsible for its products and applications using **onsemi** products, including compliance with all laws, regulations and safety requirements or standards, regardless of any support or applications information provided by **onsemi**. "Typical" parameters which may be provided in **onsemi** data sheets and/or specifications can and do vary in different applications and actual performance may vary over time. All operating parameters, including "Typicals" must be validated for each customer application by customer's technical experts. **onsemi** does not convey any license under any of its intellectual property rights nor the rights of others. **onsemi** products are not designed, intended, or authorized for use as a critical component in life support systems or any FDA Class 3 medical devices or medical devices with a same or similar classification in a foreign jurisdiction or any devices intended for implantation in the human body. Should Buyer purchase or use **onsemi** products for any such unintended or unauthorized application, Buyer shall indemnify and hold **onsemi** and its officers, employees, subsidiaries, affiliates, and distributors harmless against all claims, costs, damages, and expenses, and reasonable attorney fees arising out of, directly or indirectly, any claim of personal injury or death associated with such unintended or unauthorized use, even if such claim alleges that **onsemi** was negligent regarding the design or manufacture of the part. **onsemi** is an Equal Opportunity/Affirmative Action Employer. This literature is subject to all applicable copyright laws and is not for resale in any manner.

ADDITIONAL INFORMATION

TECHNICAL PUBLICATIONS:
Technical Library: www.onsemi.com/design/resources/technical−documentation
onsemi Website: www.onsemi.com

ONLINE SUPPORT: www.onsemi.com/support
For additional information, please contact your local Sales Representative at www.onsemi.com/support/sales