

ON Semiconductor®

LV8726TAGEVK
Evaluation Kit User Guide

NOTICE TO CUSTOMERS

The LV8726TA Evaluation Kit v0 is intended to be used for ENGINEERING DEVELOPMENT, DEMONSTRATION OR EVALUATION PURPOSES ONLY and is not considered by ON SEMICONDUCTOR to be a finished end product fit for general customer use. Information contained in this document regarding the device application and the like is provided only for your convenience.

ON SEMICONDUCTOR MAKES NO REPRESENTATIONS OR WARRANTIES OF ANY KIND WHETHER EXPRESS OR IMPLIED, WRITTEN OR ORAL, STATUTORY OR OTHERWISE, RELATED TO THE INFORMATION, INCLUDING BUT NOT LIMITED TO ITS CONDITION, QUALITY, PERFORMANCE, MERCHANTABILITY OR FITNESS FOR PURPOSE.

The user indemnifies ON SEMICONDUCTOR fully in respect of any claim made against ON SEMICONDUCTOR arising from the use of the LV8726TA Evaluation Kit v0.

WARNING

The LV8726TA Evaluation Kit v0 is referenced to the DC supply ground and is not earthed. Hence, it carries a risk of electric shock. Caution is required when the power is applied to the kit. Only qualified technicians and/or engineers should handle the kit. When the power is applied to the kit, it is absolutely must that users only probe provided test points and do not touch any other point on the kit.

1. Introduction

The LV8726TA Evaluation Kit v0 is designed to provide an easy and quick development platform for a bipolar stepper motor control applications using LV8726TA. The kit enables users to develop their customized system solution by utilizing various features of LV8726TA and provides real-time development capabilities. The kit consists of:

1. LV8726TA Evaluation Board :
   LV8726TAGEVK v0 with on-board microcontroller circuit (Daughter board)
2. USB cable



LV8726TAGEVK top view

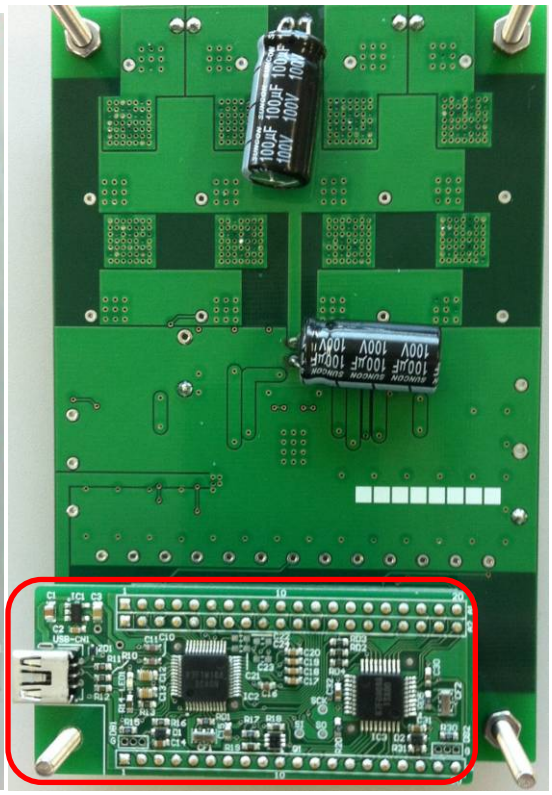

LV8726TAGEVK bottom view



USB cable

Figure 1: LV8726TA Evaluation Kit V0

2. Features

The kit provides an integrated development platform to drive a bipolar stepper motor. Following are key features of the kit.

LV8726TA Evaluation Board: LV8726TAGEVK v0

- LV8726TA for a bipolar stepper motor advancement of a step position, system control and drive
- P/N-MOSFET based inverter for driving the motor
- Daughter board for communication with the PC based Graphical User Interface.
- Protections for safe operation (Over-current, under-voltage)

Graphical User Interface (GUI)

- Enables users to set/modify LV8726TA parameters in real-time

3. LV8726TA Evaluation Board (EVB) Overview

The LV8726TA is the central controller on the EVB that implements a bipolar stepper motor drive, provides user-selectable system control functions and drives the motor through the on-board P/N-MOSFET based inverter. Refer Appendix B for the LV8726TA EVB schematic.

TR1-TR8: P/N-MOSFET Based Inverter

The EVB has two H-bridges outputs constructed in P/N-MOSFETs (TR1, …, TR8) as shown in the board schematic (Appendix A). Optional diode pads (D1, …, D8: not installed) and damping resistors (R1,…,R8:installed) are provided to control turn OFF time of P/N-MOSFETs, if needed.

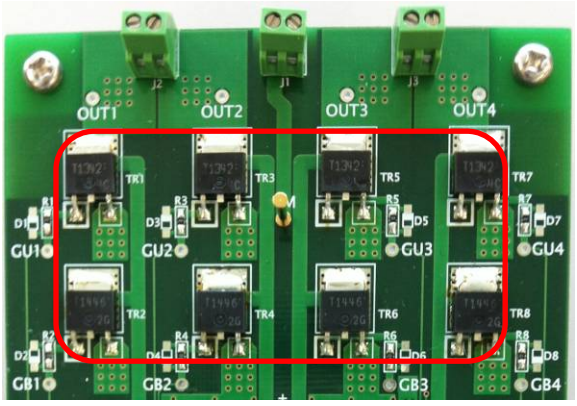

Figure 2: P/N-MOSFET Based Inverter

J1: DC power supply connector

The LV8726TA EVB is designed to operate at 48V (typ.) with the operating voltage range from 9.0V to 55V. C1 and C7 are used as a local source and filter for the board. To power up the board, connect an external power supply to J1. Alternatively, connect an external power supply between VM (pin 7) and PGND .

Connector J1
1:VM 2:GND

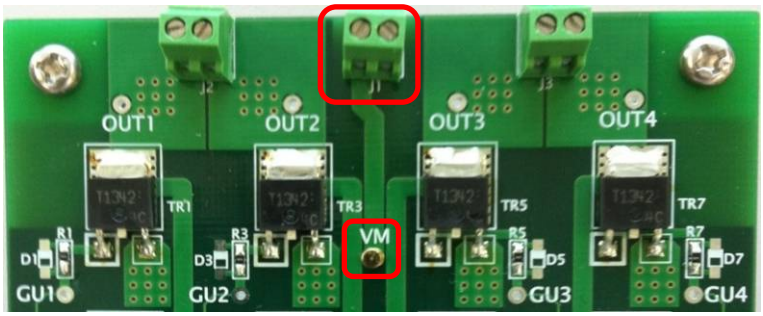

Figure 3: DC power supply connector

J2, J3: Motor winding connector

The LV8726TA can drive one bipolar stepper motor. Connect the motor wires to J2 and J3 as shown in Figure 4.

-The maximum output rating of this board is 6A. Because it is limited by the maxmum ratings of R9 and R10. When driving more than 6A, please make adequate arrangement.

(Reference) The maxmum ratings of J1-3(connectors) are 10A. TR1,3,5,7(Pch) are 12A. And TR2,4,6,8(Nch) are 17A.

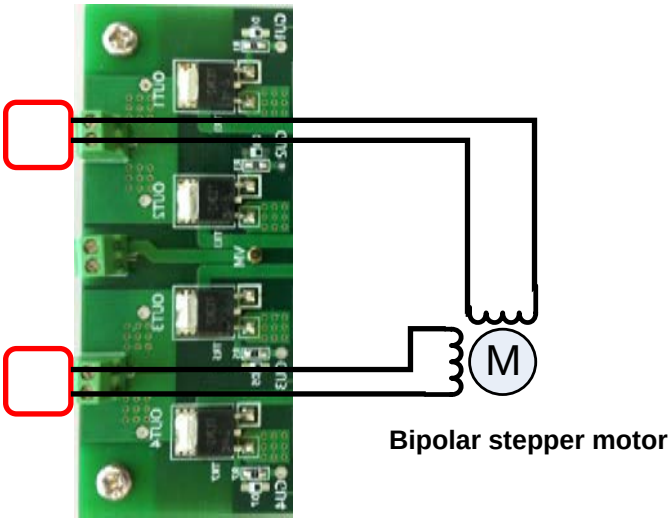

Figure 4: Motor winding connector

USB connector on the Daughter board

The regulator on the Daughter board generates VCC=3.3V output from USB power. The logic block in LV8726TA and Daughter board are designed to operate at VCC.

- When the external microcontroller is used, remove the Daughter board, and apply a power supply same as the external microcontroller to VCC.

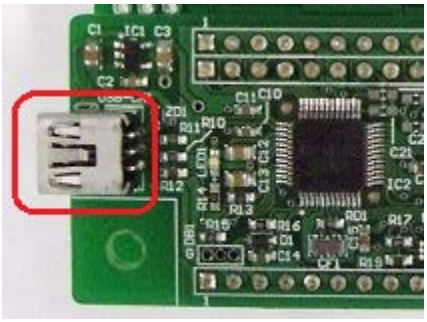

USB connector on the daughter board

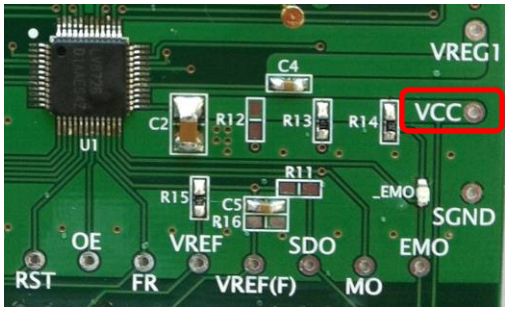

Figure 5: USB connector and VCC pin

EMO: LED

The LV8726TA has the EMO pin which outputs the fault detection. The fault events are either over-current or under-voltage, which is selected by the register setting with GUI. This pin is the open-drain output type and when the fault is detected, the EMO pin is placed in the ON (EMO = Low) state. LED is provided on the EVB to indicate this fault detection of the device. The GUI operation will be described below.

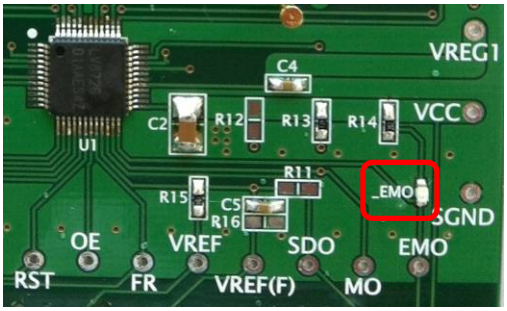

Figure 6: LED

R9A,B,C R10A,B,C: RF Resistor

The output current is determined by the RF Resistor and the REF voltage based on the following equation.

$$I_{OUT} = \frac{V_{REF} / 5}{R_{RF1(2)}} \times ATT_{RATIO}$$

Where,

I_{OUT} : Motor current
V_{REF} : REF voltage
5: The constant value in LV8726TA
$R_{RF1(2)}$: RF1(2) Resistor (Default setting value is 0.11Ω.)
ATT_{RATIO}: Attenuate ratio

The 0.11Ω resistor is installed to R_{RF1} and R_{RF2} individually. On this EVB, the 0.11Ω resistor is made up of the parallel connection of the 0.22 Ω resistor. V_{REF} is an external voltage source which is driven by the daughter board, and its voltage level can be set by GUI. ATT_{RATIO} is set by the register with GUI. The GUI operation will be described below.

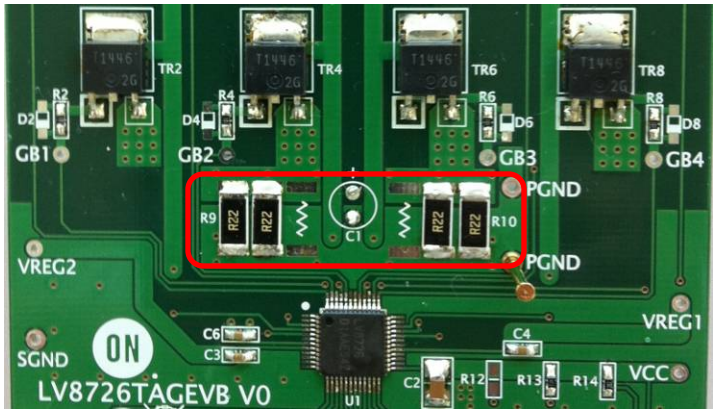

Figure 7: RF1(2) Resistor

4. Graphical User Interface (GUI) Installation

An easy-to-use GUI is provided (*free of cost*) for real-time LV8726TA based solution development. Perform the following steps to get started with the GUI. This GUI will work with the Windows 7 (32bit, 64bit) and Windows 8 (32bit).

(1) Unpack the zip file **"M-DrAGON_version1130.zip"**, and confirm files as shown in below.
“M-DrAGON_version1130.exe”, **“M-DrAGON_driver.inf”**, and
“LV8726TAGEVK v0 Evaluation Kit User Guide.pdf”.
(2) Connect the LV8726TAGEVK to the PC using the USB cable.

Steps (3) to (11) show the USB driver installation procedure that refers to an expression on Windows 8 (32bit). This layout and procedure may vary with other operating system version. It is required only for the first time when the LV8726TAGEVK is connected to the USB port.

(3) The Windows OS will try to install driver on its own. Wait for a few minutes. Installation will fail.
(4) Click on the Start Menu, and open the Control Panel.
(5) Open the Device Manager.
(6) Either under “Ports (COM & LPT)” or “Other Devices”, you should see an open port named “USB-MiconI/ O Controller”.

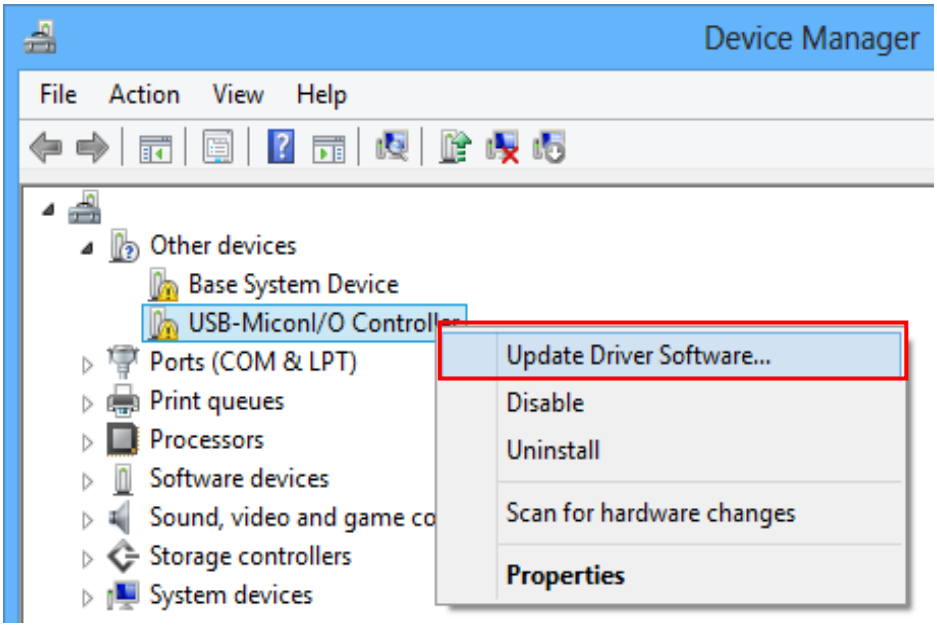

Figure 8: Device Manager 1

(7) Right click on the “USB-MiconI/ O Controller” port and choose the “Update Driver Software” option.

- If the update driver software option is not available, then the Windows OS is still trying to install the driver on its own. Wait till the OS finishes self-try.

(8) Next, choose the "Browse my computer for Driver software" option.
(9) Finally, navigate to and select the driver file named **“M-DrAGON_driver.inf”**, located in the “M-DrAGON_driver” folder. And click “Next”.
(10) Windows will finish up the driver installation from there.

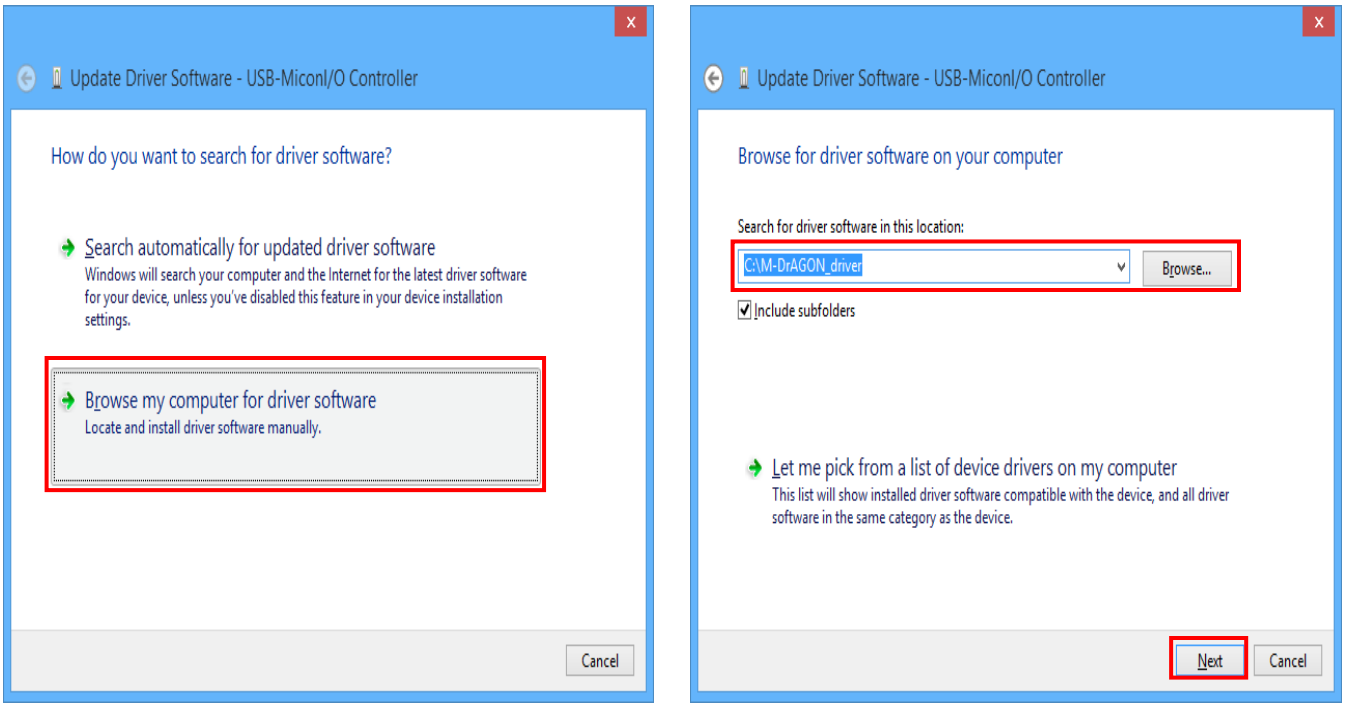

Figure 9: USB-MiconI/ O Controller 1

Note: When “Windows security” is shown, please select “Install this driver software anyway”.

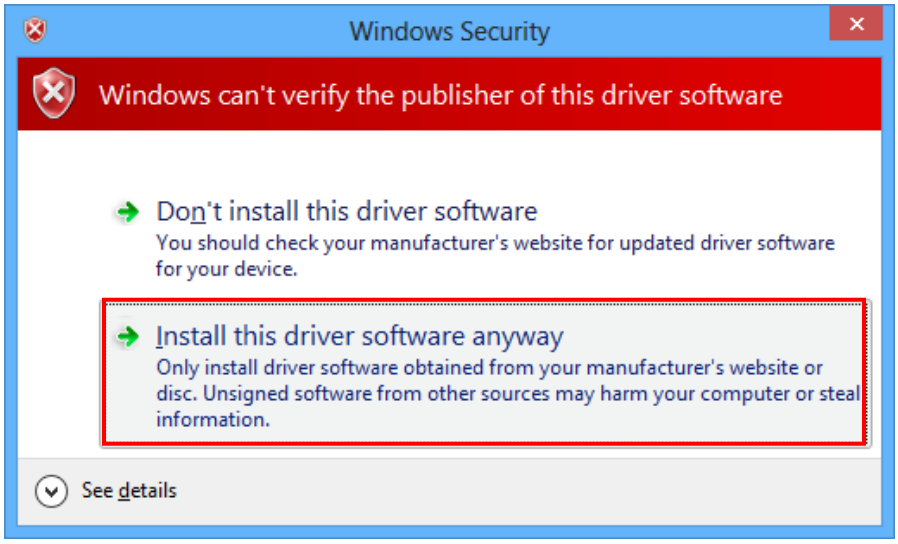

Figure 10: Windows Security

(11) When the installation is successful, the final window is shown. And the recognized M-DrAGON I/O Controller port with the port number is shown in the Device Manager.

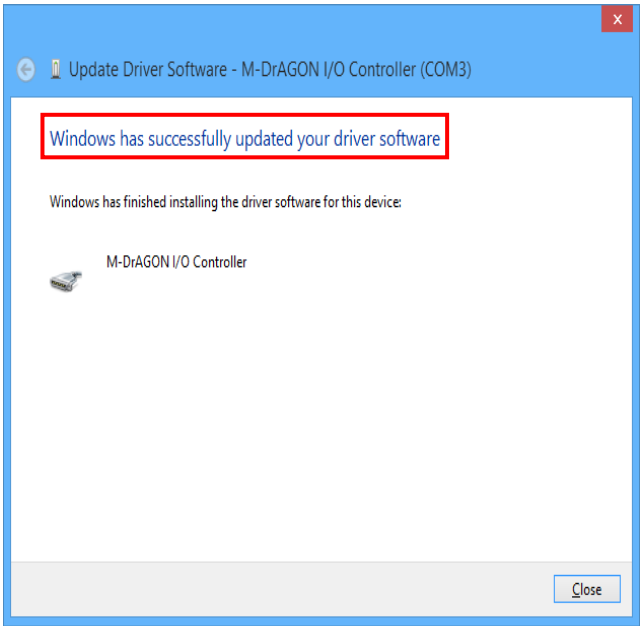

Figure 11: USB-MiconI/ O Controller 2

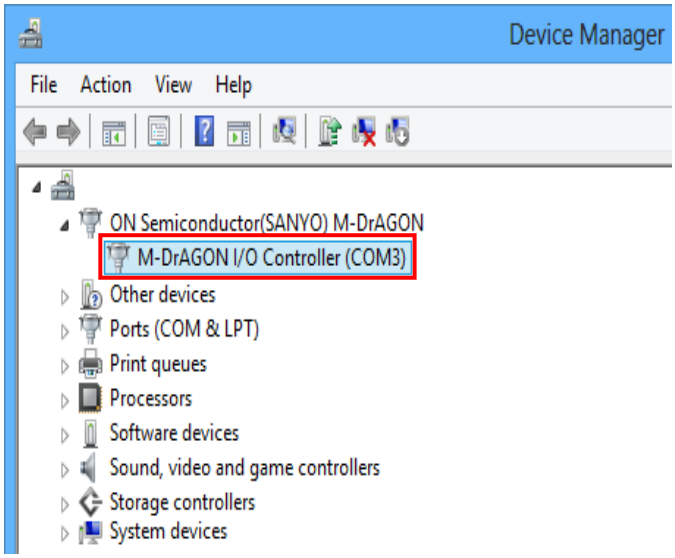

Figure 12: Device Manager 2

(12) Start “M-DrAGON_version1130.exe”. Select “Stepper” in Motor type. Since the Driver type is displayed device that can drive the stepper motor by selecting “Stepper”, select “LV8726(Stepper)” from the drop-down list of Driver type, and then click “OK”.

- When the user starts “M-DrAGON_version1130.exe”,the LED (Red) on the board turns on. This is no problem. When the user selects “LV8726(Stepper)” from the drop-down list of Driver type, the LED turns off.

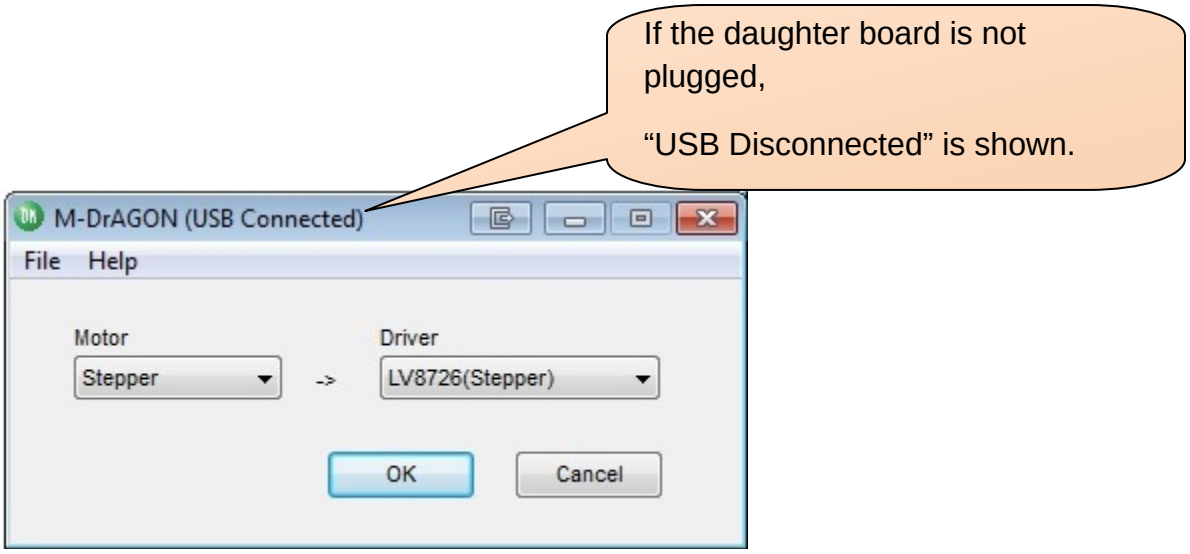

Figure 13: Motor type and Driver setting window

(13) The following windows appear.

- Controller (Figure 14)
- Tachometer (Figure 15)
- Graph (Figure 16)

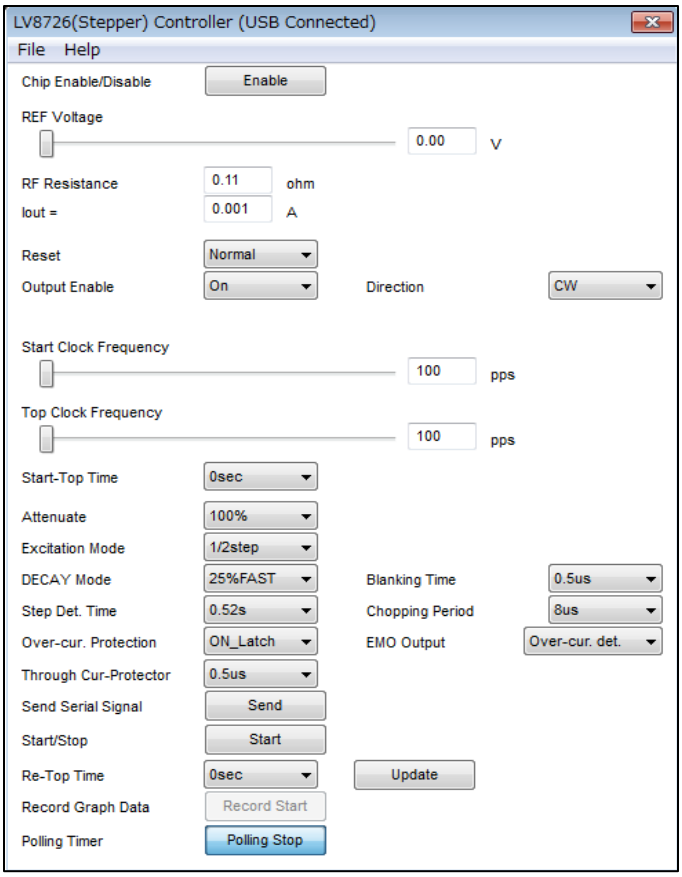

Figure 14: Controller window

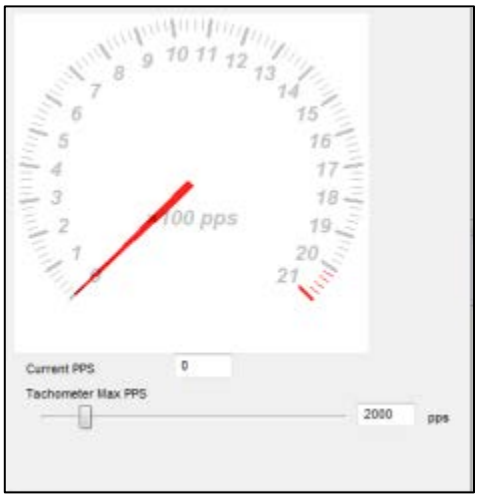

Figure 15: Tachometer window

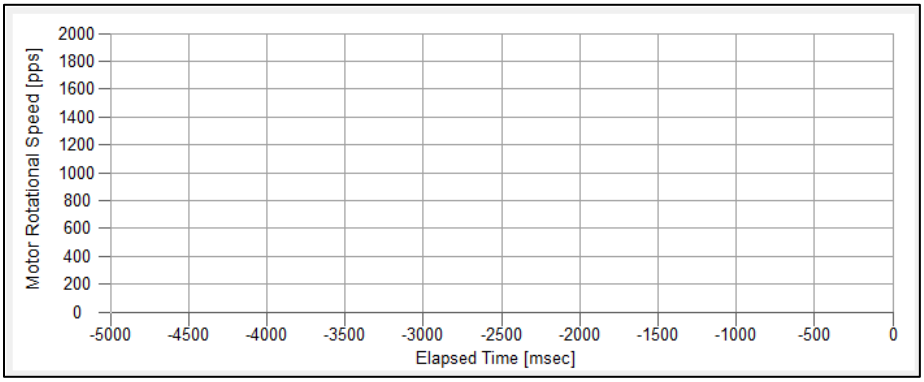

Figure 16: Graph window

Usage of the GUI

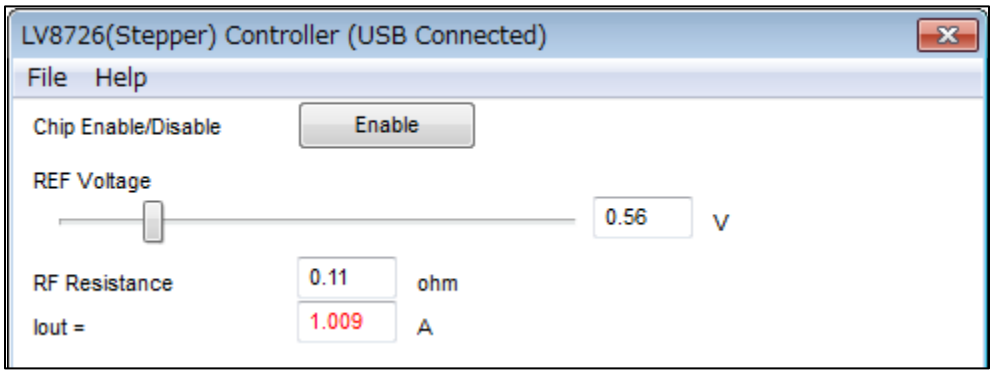

Figure 20: GUI field description of controller window 1-1

Chip Enable / Disable

"Enable": IC will be enabled state. The indicator changed to "Disable".
"Disable": IC will be disabled state. The indicator changed to "Enable".

REF Voltage, RF Resistance, Iout

For setting the reference voltage.
The output current is determined by the RF resistor, the attenuate ratio and the REF voltage based on the following equation.

$$I_{OUT} = \frac{V_{REF} / 5}{R_{RF1(2)}} \times ATT_{RATIO}$$

Where,

I_{OUT}: Motor current
V_{REF}: REF voltage
5: The constant value in LV8726TA
$R_{RF1(2)}$: RF1(2) Resistor (Default setting value is 0.11Ω.)
ATT_{RATIO}: Attenuate ratio

RF Resistance

Setting for the resistance value of the detection resistor of the output current. The value of RF Resistance must be same with the parallel value of R1 and R2 (R1//R2) in the evaluation board. Default set value is 0.11Ω (0.22//0.22).

Iout:

Iout is calculated by the set REF Voltage and set RF Resistance after "Polling Start" button is clicked. This value is not actual but a calculated value. The bigger the Iout the heavy the motor torque.

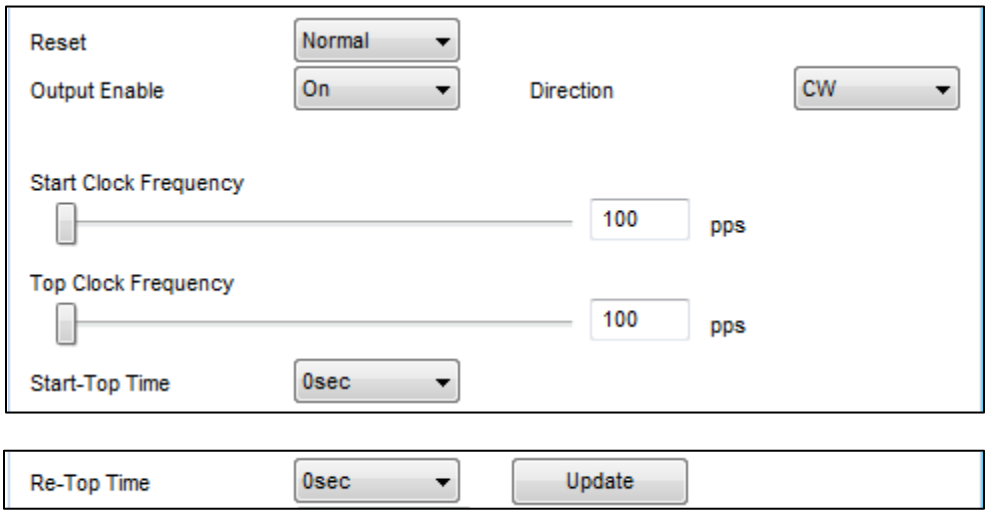

Figure 21: GUI field description of controller window 1-2

Reset

"Normal": Not reset. "RST" pin is applied Low level.

"Reset" : Make the output to go the initial state. At this time, "RST" pin is applied High level. "MO" pin that is open drain circuit outputs Low level.

Output enable

"Off" : the output is disabled (OE pin= High). The output gets "high impedance" state.

"On" : the output is enabled (OE pin=Low).
The output conforms to the excitation position proceeded by the STEP input.

Direction

"CW" : Clockwise (CW). "FR" pin is applied low level.

"CCW" : Counter-clockwise (CCW). "FR" pin is applied High level.

Start Clock / Top Clock Frequency, Start-Top Time, Re-Top Time, Update

LV8726TAGEVK provides the programmable motor speed sequencer. The profile is determined by the following parameters.

“Start Clock Frequency”: This is the first frequency to start rotation. It can be selected from 100pps to 500pps.

“Top Clock Frequency”: This is the target frequency- to rotate a motor by constant speed. Reconfiguring of “Top Clock Frequency” is possible if a motor speed reach the target frequency. It can be selected from “Start Clock Frequency” to 12000pps.

“Start-Top Time”: This is a time until a motor speed becomes “TOP Clock Frequency” from “Start Clock Frequency” when pressing a “Start” button.

“Re-Top Time”: This is a time until a motor speed becomes the reset “TOP Clock Frequency” from “Top Clock Frequency” when pressing a “Update” button.

Clock Frequency (pps)
= Motor Rotational Speed in the graph window

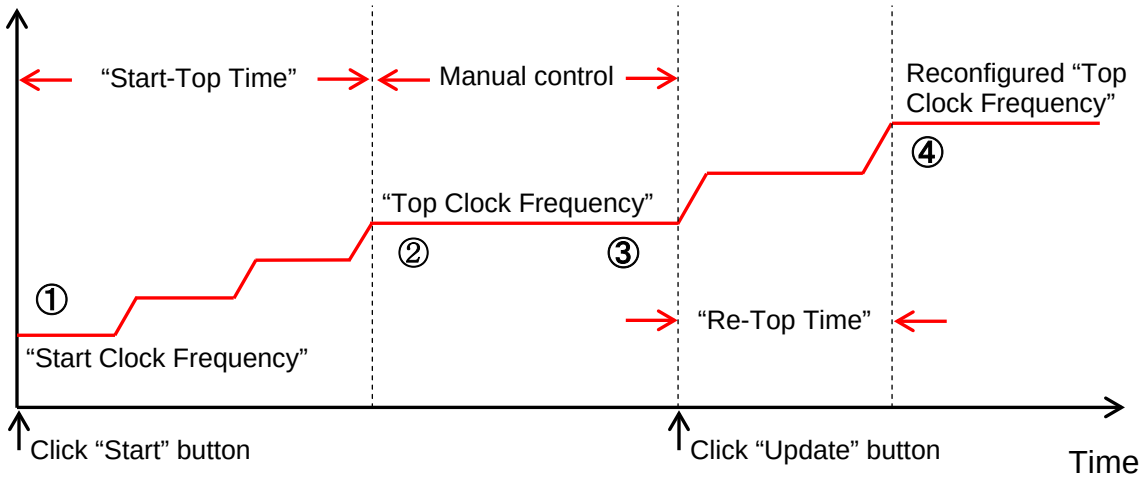

① Click “Start” button and then a motor starts to rotate at "Start Clock Frequency".
② After “Start-Top Time” has passed, a motor rotate at "Top Clock Frequency".
③ It is possible to reconfigure “Top Clock Frequency" and then click “Update” button.
④ After “Re-Top Time” has passed, a motor rotate at "Top Clock Frequency".

Attention: When the clock frequency is changed drastically to high, there is a possibility to introduce the step out, i.e., the motor misses rotation steps. To avoid this, the profile must be configured so that the rotation speed is increased gradually.

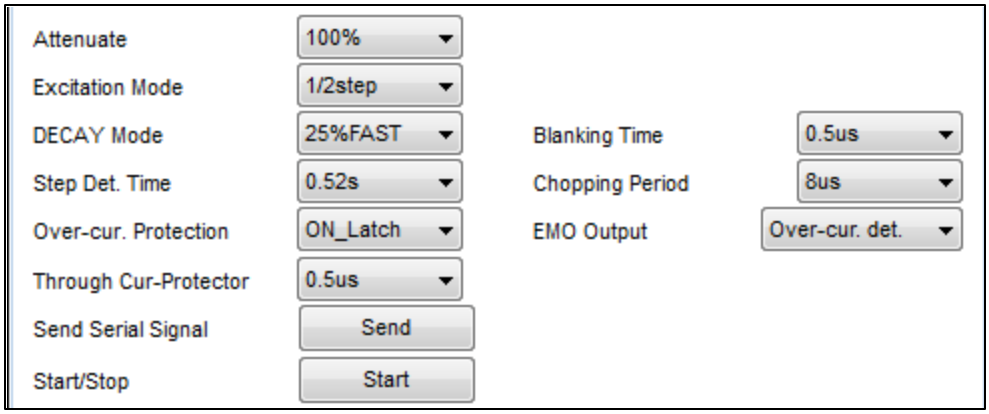

Figure 22: GUI field description of controller window 1-3

Attenuate

The attenuation ratio can be selected form 100, 90, 80, 70, 60, 50, 40, 30% by drop-down list. "I_{out} = A" in window 1-1 is reflected in this attenuate ratio.

Excitation Mode

Selection of the excitation mode (steps resolution) from 1/2, 1/4, 1/8, 1/16, 1/32, 1/64, 1/128, 1/3, 1/6, 1/12, 1/36, 1/5, 1/10, 1/20, 1/50, 1/100 STEP by drop-down list. 1/128 Step is the smoothest of all the steps.

DECAY Mode

The current DECAY mode can be selected from MIXED DECAY(25%FAST), MIXED DECAY(50%FAST), SLOW DECAY, FAST DECAY by drop-down list.

Step Det. Time

The STEP signal detection time can be selected from 0.52, 1.04s by drop-down list.

Over-current. Protection

The over-current protection circuit can be selected from ON(Latch type), ON(Auto reset type) or OFF by drop-down list.

Through Current-Protector

The through current protector OFF time can be selected from 0.5, 1.0, 2.0, 4.0us by drop-down list .

Blanking Time

The blanking time can be selected from 0.5, 1.0, 2.0, 4.0us by drop-down list.

Chopping Period

The Chopping (PWM) period can be selected from 5, 16, 24, 32us by drop-down list.

EMO Output

EMO output pin can be selected from Over-current detection, Low voltage detection (VM pin voltage monitoring).

-LV8726TA in itself can outputs the fault detection of thermal shutdown (TSD), when TSD is selected by the register setting. However this GUI is not designed to select TSD.

Send Serial Signal

When “Send’ button is clicked, all registers are updated. And this button is enabled only when IC is enabled state (Control window 1-1 “Enable” button).



Figure 23: GUI field description of controller window 1-4

Start / Stop

When “Start” button is clicked, the “STEP” signals is outputted. Then the motor starts rotating. When “Stop” button is clicked, the “STEP” signals stop.

Record Start / End

It is necessary to choose a file to save Excel data.
When “Record Start” button is clicked after a file was chosen, the Excel data of “Time” - “Motor Rotational speed (Clock frequency: pps)” is outputted to selected file. When “Record End” button is clicked, this GUI stops the output of Excel data.
Refer to "Export Speed graph data" for the details.

Polling Start / Stop

Clicked “Polling Start” button to update “REF Voltage”, “tachometer” and “Graph” in real-time. “Iout” is also recalculated by updating “REF Voltage”. The default setting is that the polling operation works, and the button changed to “Polling Stop”.

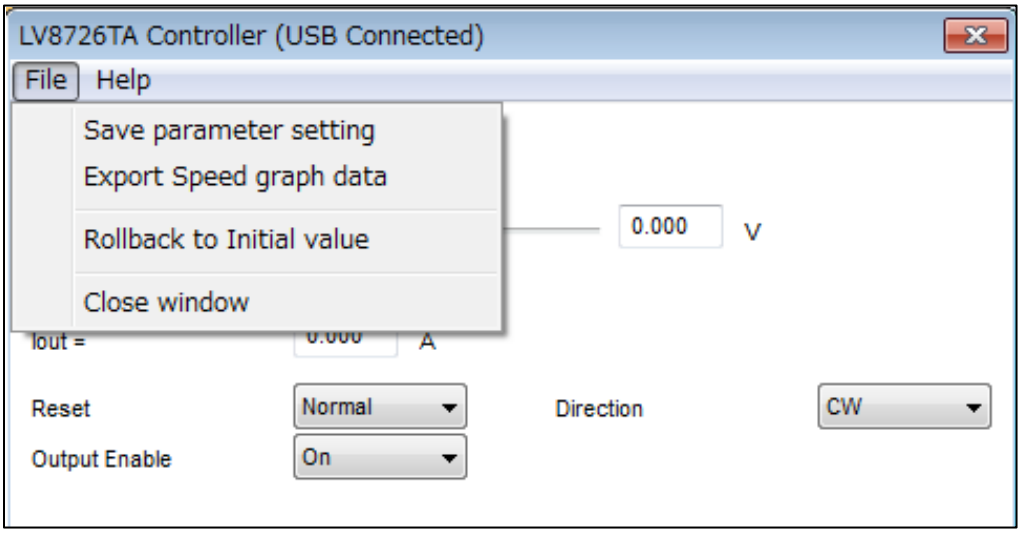

Figure 24: GUI field description of controller window 2

Save parameter setting

Output the setting data of GUI. Select “File” in the menu bar at the top of GUI Controller window or Motor and Driver setting window (refer to next page), then select “Save parameter setting”.

Export Speed graph data

Output the Excel data of “Time” - “Motor Rotational speed (Clock frequency: pps)”. Select “File” in the menu bar at the top of GUI Controller window, then select “Export Speed graph data”, and then input file name, and start preservation of data after “Record Start” is clicked, and stop it when “Record End” is clicked. When the file which already exists is chosen, newest data is appended under a previous data. The data format is CSV as follows; “time”, “raw data” and “pps”. The data of “rpm” is not outputted.

Rollback to Initial value

When “Rollback to Initial value” is clicked, all parameters of the Controller window is returned to an initial value.

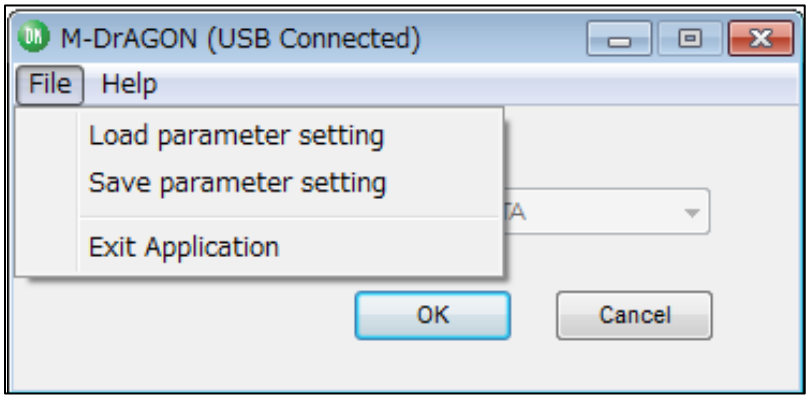

Figure 25: GUI field description of Motor type and Driver setting window

Load parameter setting

Load the file which is saved the setting data of GUI with “Save parameter setting”. Select “File” in the menu bar at the top of Motor and Driver setting window, then select “Load parameter setting”.

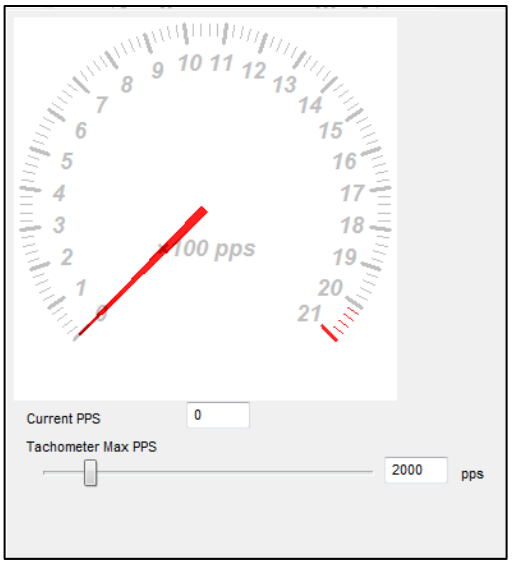

Figure 26: GUI field description of tachometer window

Current PPS

The current PPS shows pulse rate which is controlled by microcontroller. It is possible to adjust the maximum pulse rate for Tachometer and Graph by using “Tachometer Max PPS”.

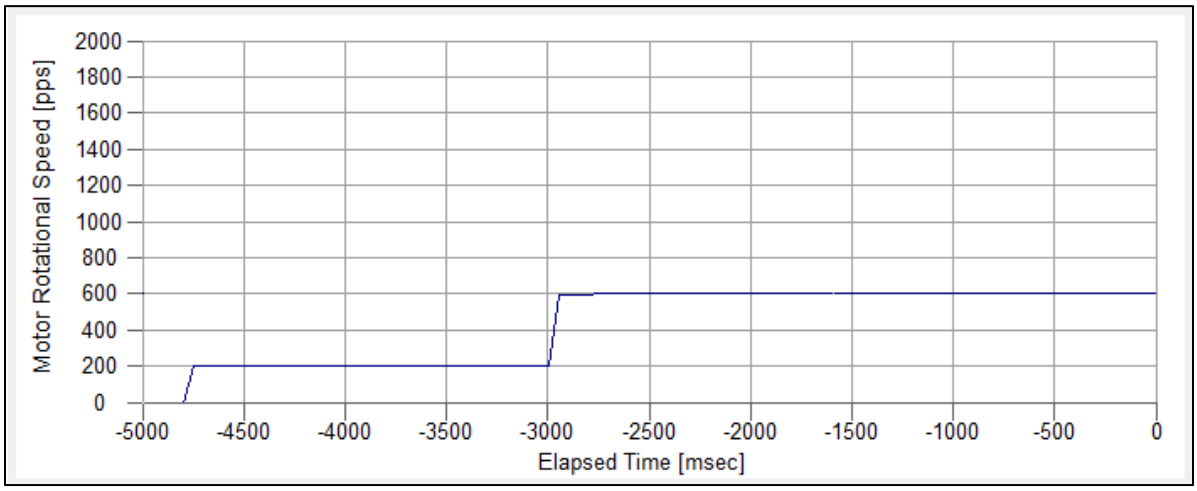

Figure 27: GUI field description of graph window

This graph shows the relationship between elapsed time (X-axis) and motor pulse rate (Y-axis). Pulse rate value is as same as tachometer value.
Maximum level of Y-axis is adjusted by “Tachometer Max PPS” with tachometer.
The scale of X-axis is 500msec/div. Graph is automatically scrolled according to elapsed time.

Note:

Please refer to LV8726TA data sheet for the detailed explanation of the GUI’s function.

5. Operation

Following steps describe a typical operating procedure. Assuming that the device driver has been already installed.

Step 1. Connect the LV8726TAGEVK to the PC using the USB cable.
Step 2. Connect the motor to J2, J3 and power supply to J1(VM).

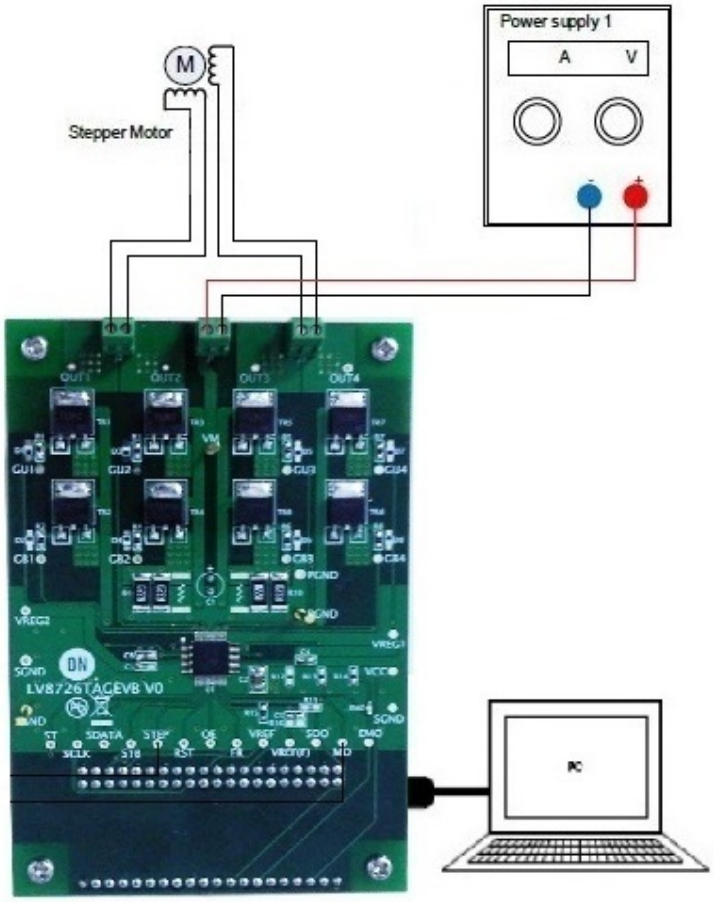

Figure 28: Setup for stepper motor

Step 3. Turn-on the power supply.
Step 4. Run "**M-DrAGON_version1130.exe**".

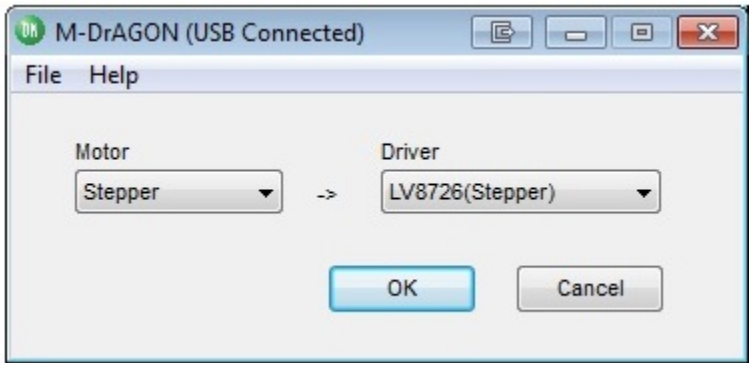

Figure 29: Motor type and Driver setting window

Step 5. Set the following parameters in the GUI (please see below example).

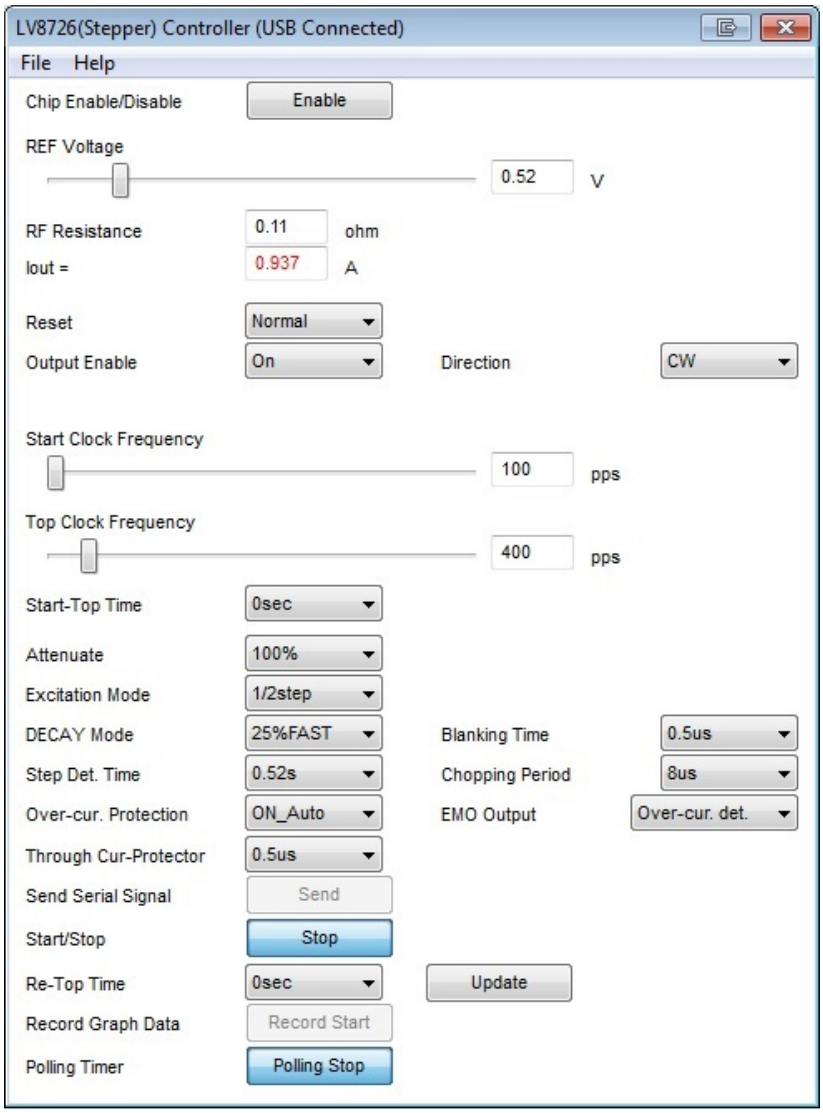

Figure 30: Setting parameters in the GUI

Step 6. Click “Enable” button. The indicator changed to “Disable”.
Step 7. Click “Send” button.

- Click “Send” button everytime a parameter is changed in the control window.

Step 8. Click “Start” button and then the motor begin to rotate. The indicator changed to “Stop”.
Step 9. Click “Stop” button and then the motor stop. The indicator changed to “Start”.
Step 10. Click “Disable” button. The indicator changed to “Enable”.

APPENDIX A. Electrical Operation Check (Reference) – LV8726TAGEVK v0

1. Connect the LV8726TAGEVK to the PC using the USB cable.
2. Connect the motor to J2, J3 and power supply to J1(VM).

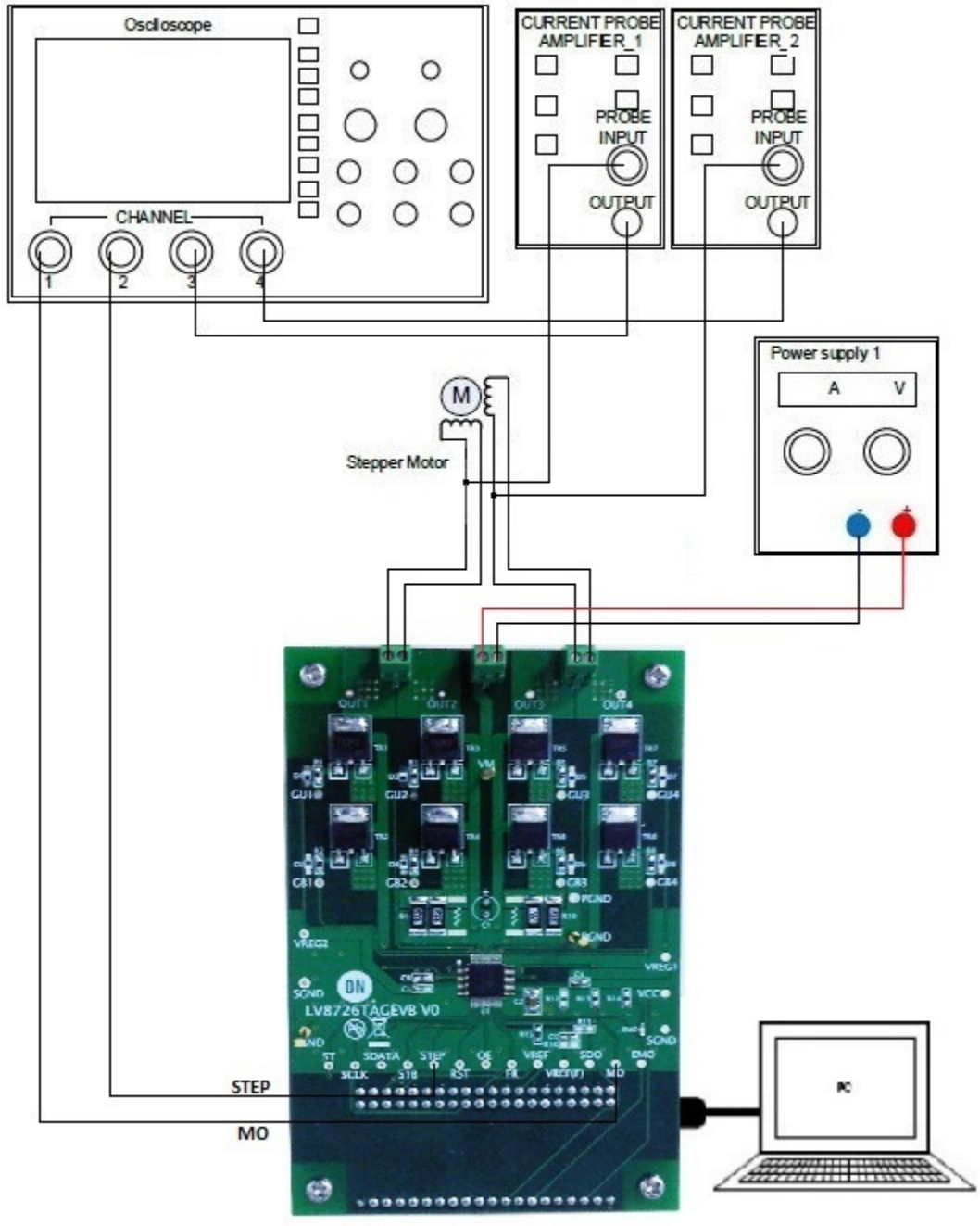

Figure 31: Setup for stepper motor

3. Turn-on the power supply.
4. Run "**M-DrAGON_version1130.exe**".

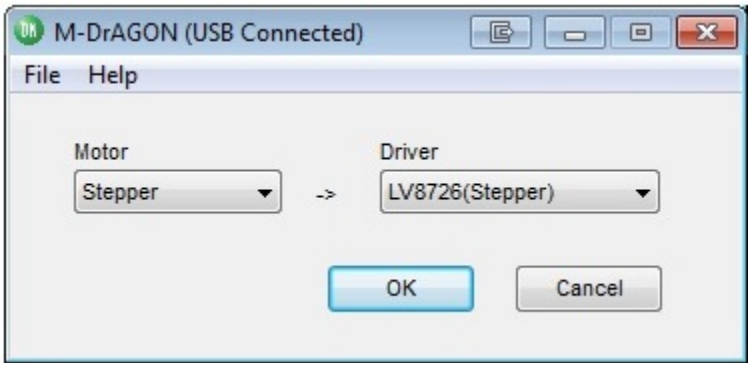

Figure 32: Motor type and Driver setting window

5. Set the following parameters in the GUI (please see below example).

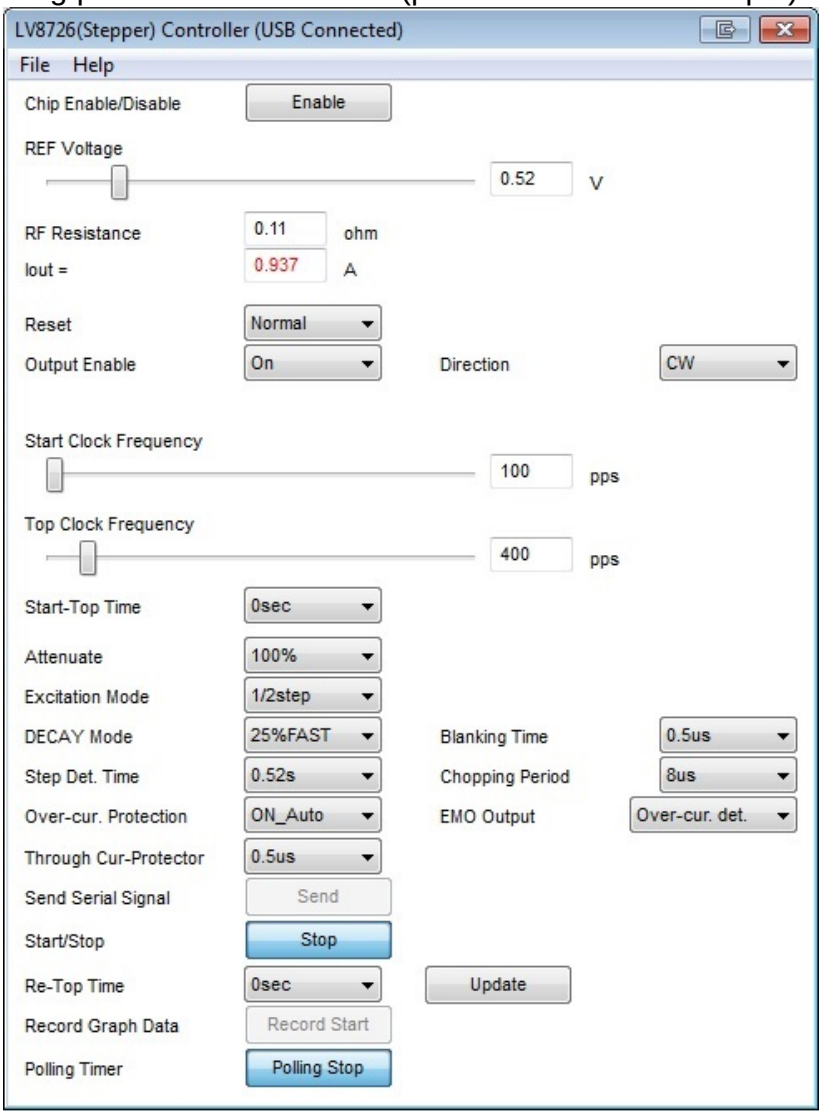

Figure 33: Setting parameters in the GUI

6. Click “Enable” button. The indicator changed to “Disable”.
7. Click “Send” button.
8. Click “Send” button everytime a parameter is change in the control window.
9. Click “Start” button and then the motor begin to rotate. The indicator changed to “Stop”.

- Monitor **EMO** and **STEP** terminal voltages using CH1 and CH2 of the scope. Monitor **OUT1** and **OUT3** output current waveforms using CH3 and CH4.

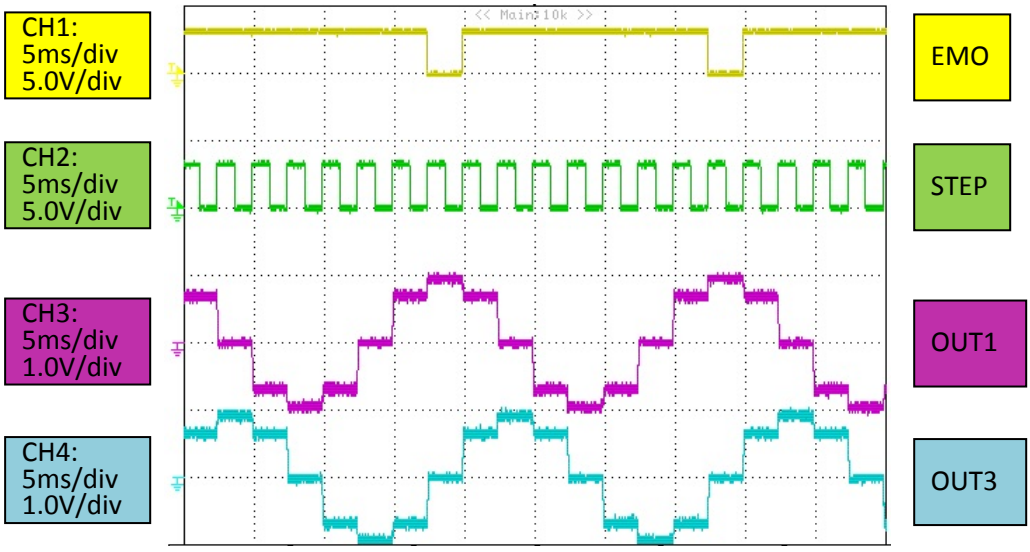

Figure 34: Waveforms for Stepper Motor

10. Click “Stop” button and then the motor stop. The indicator changed to “Start”.
11. Click “Disable” button. The indicator changed to “Enable”.

APPENDIX B. SCHEMATIC – LV8726TAGEVK v0

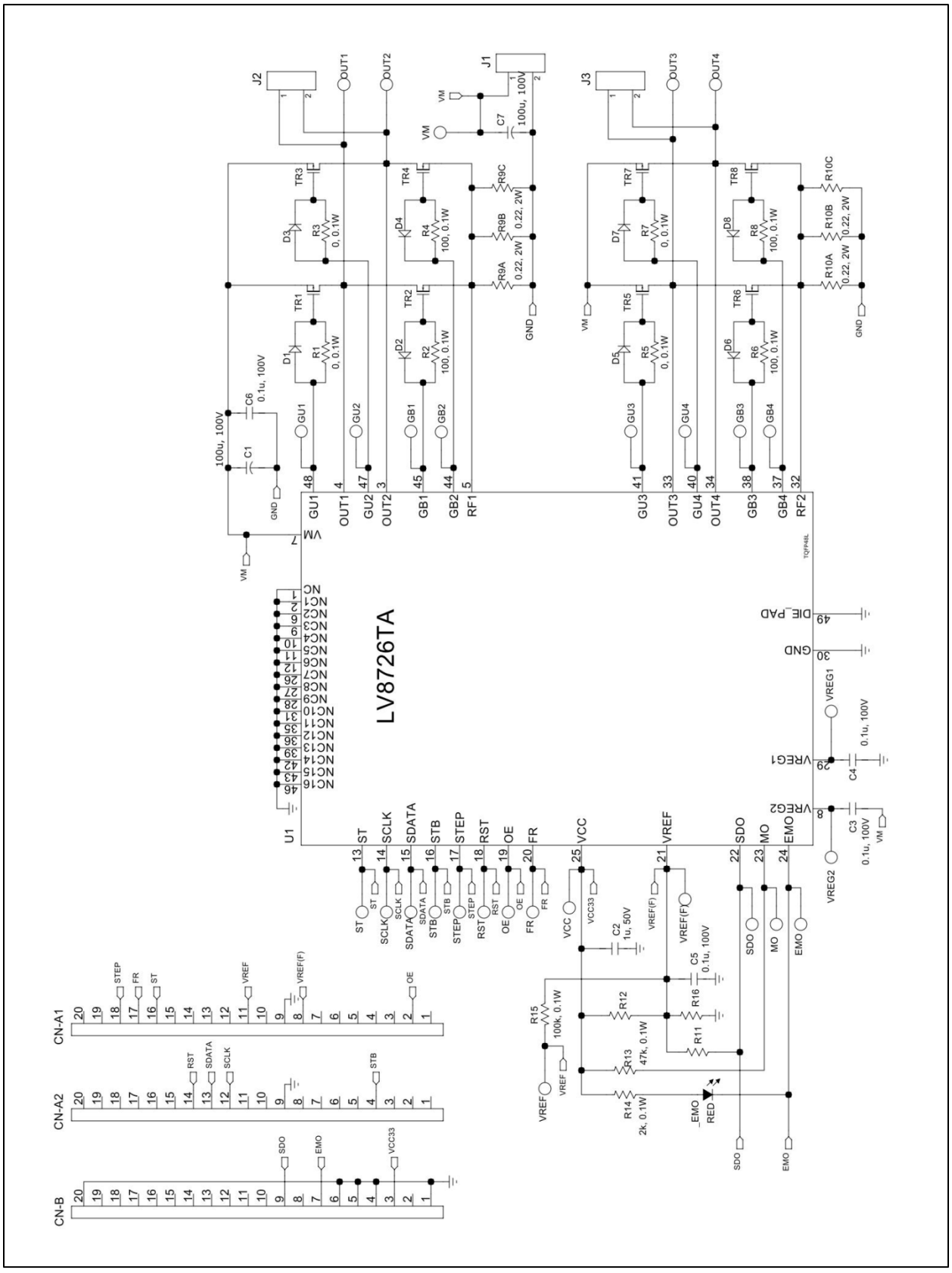

APPENDIX C. BILL OF MATERIAL - LV8726TAGEVK v0

Bill of Materials for the LV8726TAGEVB Evaluation Board

ON Semiconductor®

Designator	QTY.	Description	Value	Tolerance	Footprint	Manufacturer	Part Number	Substitution Allowed	Installed	Lead Free
U1	1	Motor Driver	-	-	TQFP48L	ON Semiconductor	LV8726TA	No	Yes	Yes
TR1 TR3 TR5 TR7	4	Pch Power MOSFET	-	-	TP-FA	ON Semiconductor	SFT1342-TL-E	Yes	Yes	Yes
TR2 TR4 TR6 TR8	4	Nch Power MOSFET	-	-	TP-FA	ON Semiconductor	SFT1445-TL-H	Yes	Yes	Yes
R1 R3 R5 R7	4	Resistor	0, 0.1W	±5%	1608 BIG	KOA	RK73B1JTxxxJ	Yes	Yes	Yes
R2 R4 R6 R8	4	Resistor	100, 0.1W	±5%	1608 BIG	KOA	RK73B1JTxxxJ	Yes	Yes	Yes
R9A R9B R10A R10B	4	RF Resistor	0.22, 2W	±5%	6432 BIG	TE Connectivity	RLP73K3AR22JTE	Yes	Yes	Yes
R9C R10C	2	RF Resistor	-	-	6432 BIG	ROHM	-	Yes	No	-
R11-12 R16	3	Resistor	-	-	1608 BIG	KOA	RKR3B1JTxxxJ	Yes	No	-
R13	1	Resistor	47k, 0.1W	±5%	1608 BIG	KOA	RKR3B1JTxxxJ	Yes	Yes	Yes
R14	1	Resistor	2k, 0.1W	±5%	1608 BIG	KOA	RK73B1JTxxxJ	Yes	Yes	Yes
R15	1	Resistor	100k, 0.1W	±5%	1608 BIG	KOA	RK73B1JTxxxJ	Yes	Yes	Yes
C1 C7	2	VM Bypass Capacitor	100u, 100V	±20%	F2.0-5	SUN Electronic	100ME100HC	Yes	Yes	Yes
C2	1	VCC BypassCapacitor	1u, 50V	±10%	3216 BIG	MURATA	GRM31MB31H105K	Yes	Yes	Yes
C3-6	4	Capacitor	0.1u, 100V	±10%	1608 BIG	MURATA	GRM188R72A104K	Yes	Yes	Yes
D1-8	8	Switching Diode	-	-	MCP2	ON Semiconductor	DSE010	Yes	No	-
EMO	1	LED	RED		1608 BIG	STANLEY	FR1111C-TR	Yes	Yes	Yes
J1	1	DC power supply connector	-	-	Pitch 2.54mm	TE connectivity	282834-2	Yes	Yes	Yes
J2-3	2	Motor winding connector	-	-	Pitch 2.54mm	TE connectivity	282834-2	Yes	Yes	Yes
CN-A1-2	1	Female Socket	-	-	Pitch 2.54mm	Useconn	FH-2x20	Yes	Yes	Yes
CN-B	1	Female Socket	-	-	Pitch 2.54mm	Useconn	FH-1x20	Yes	Yes	Yes
Daughter Board	1	Interface board	-	-	-	ON Semiconductor	-	No	Yes	Yes
USB cable	1	A-MiniB	-	-	-	XIAMEN UME	USBcable A-miniB	Yes	Yes	Yes