

ON Semiconductor®

LV8811G/13G/14J Evaluation Board User Guide

NOTICE TO CUSTOMERS

The LV8811G, LV8813G, and LV8814J Evaluation Board is intended to be used for ENGINEERING DEVELOPMENT, DEMONSTRATION OR EVALUATION PURPOSES ONLY and is not considered by ON SEMICONDUCTOR to be a finished end product fit for general customer use. Information contained in this document regarding the device application and the like is provided only for your convenience. ON SEMICONDUCTOR MAKES NO REPRESENTATIONS OR WARRANTIES OF ANY KIND WHETHER EXPRESS OR IMPLIED, WRITTEN OR ORAL, STATUTORY OR OTHERWISE, RELATED TO THE INFORMATION, INCLUDING BUT NOT LIMITED TO ITS CONDITION, QUALITY, PERFORMANCE, MERCHANTABILITY OR FITNESS FOR PURPOSE. The user indemnifies ON SEMICONDUCTOR fully in respect of any claim made against ON SEMICONDUCTOR arising from the use of the LV8811G, LV8813G, and LV8814J Evaluation Board.

WARNING

The LV8811G, LV8813G, and LV8814J Evaluation Board is referenced to the DC supply ground and is not earthed. Hence, it carries a risk of electric shock. Caution is required when the power is applied to the kit. Only qualified technicians and/or engineers should handle the kit. When the power is applied to the kit, it is absolutely must that users only probe provided test points and do not touch any other point on the kit.

The LV8811G,LV8813G, and LV8814J Evaluation Board is designed to provide an easy and quick development platform for three phase single sensor BLDC motor control applications using LV8811G, LV8813G, nad LV8814J. The board enables users to develop their customized system solution by utilizing various features of LV8811G, LV8813G, and LV8814J and provides real-time development capabilities.

1. Overview

The LV8811G/13G/14J board consists of the following I/O and components:

1. Three phases motor output
2. Hall sensor bias output
3. Hall sensor input
4. PWM input
5. FG output
6. Monitoring outputs and setting inputs (optional)
7. Configuration setting resistors

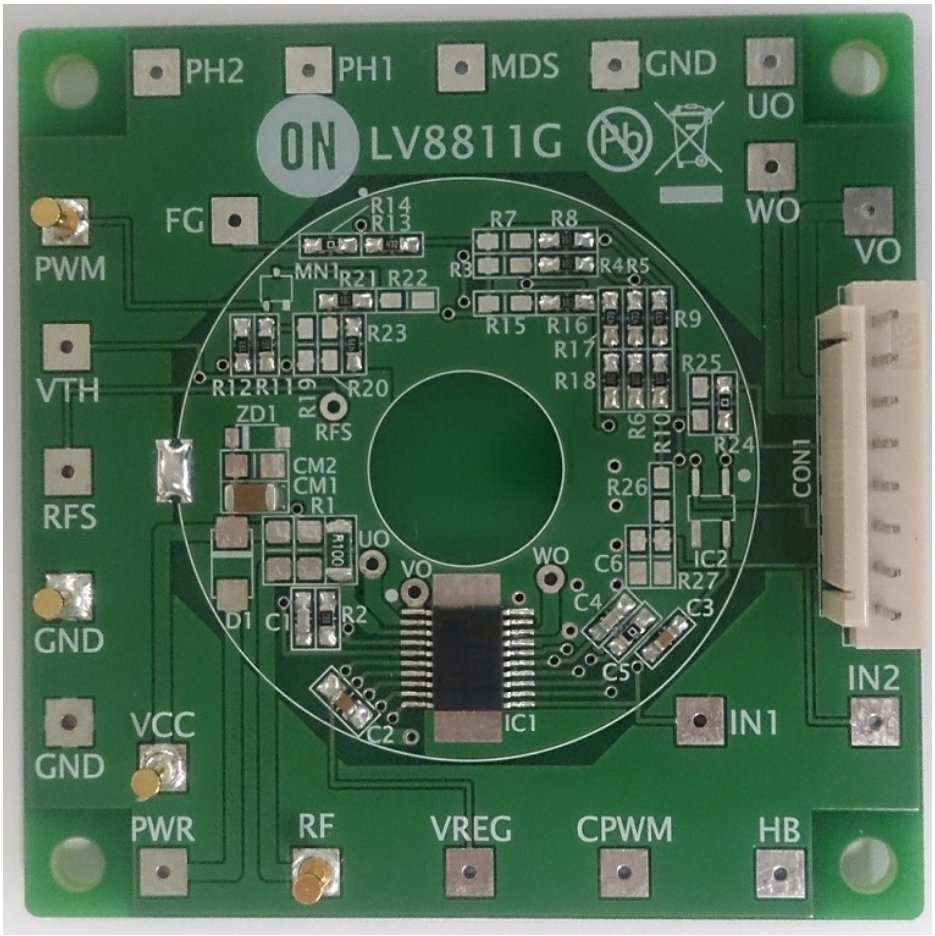

Figure 1: LV8811G Evaluation Board

2. Features

The followings are key features of the board.

- Supports 12.0V (typ.) supply voltage
- Speed control input: PWM duty cycle
- Selectable Hall sensor type; sensor or IC
    - Factory default: configured for sensor type
- Configureable minimum PWM duty cycle
    - Factory-default:
      14% for enable (start)
      8% for disable (stop)
- Configurable lead angle range and its proportional constant to rotational speed
    - Factory-default:
      15degree at the lowest FG frequency

$$\text{Lead angle} = 0.15 \times fV_{FG} + 15$$

Pin name	I/O	description
PWM	IN	Speed control PWM input. 20kHz – 50kHz 3Vpp The higher duty cycle gives the higher rotational speed.
FG	OUT	3Vpp pulse whose frequency is proportional to motor speed
VTH	NA	Not applicable
RFS	Monitor	Current feedback signal can be monitored
GND	IN/OUT	Ground
VCC	IN	Power supply input. Typical 12V is assumed.
PWR	Floating	No connection
RF	Monitor	Power supply node for the power stage
VREG	OUT	3V voltage regulator output
CPWM	Monitor	Triangle waveform of the PWM generator can be monitored
HB	OUT	Bias voltage output for a Hall sensor. 1.18V DC
IN1/IN2	IN	Hall sensor signal input
U/V/W Out	OUT	Motor driver output
MDS	IN	Voltage level of MDS pin (minimum duty cycle setting) can be monitored.
PH1/PH2	IN	Voltage level of PH1 and PH2 pins (lead angle setting) can be monitored.

3. Quick Start

The following steps show the operation to spin a motor.

step 1. Connect motor phases and Hall sensor bias, ground and signal outputs. The rotational direction determination is shown in Table 2. Terminals are provided with:

- For motor phases
  - Through halls UO, VO and WO inside the circle,
  - Pins UO, WO and VO, or
  - Pin header CON1 pin 1, 2 and 3 for U, V and W individually (Hirose DF1-8)
- Hall sensor bias
  - Pin HB and Pin GND
  - Pin header CON1 pin 4 and 5 for HB and GND individually
- Hall sensor signal
  - Pins IN1 and IN2
  - Pin header CON1 pin 6 and 7 for IN1 and IN2 individually

step 2. Connect PWM signal to PWM pin of the board.
The connection points, described in step 1 and 2, are shown in figure 2 and 3.

step 3. Set appropriate duty cycle of PWM.

step 4. Connect power supply, and turn it on.

That's all.

Table 2. Hall sensor connection and rotational direction

Motor Type	IN1	IN2	Direction
3S2P 6S4P 12S8P	Hall minus	Hall plus	CW
3S4P 6S8P 9S12P	Hall plus	Hall minus	CCW

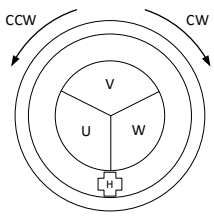

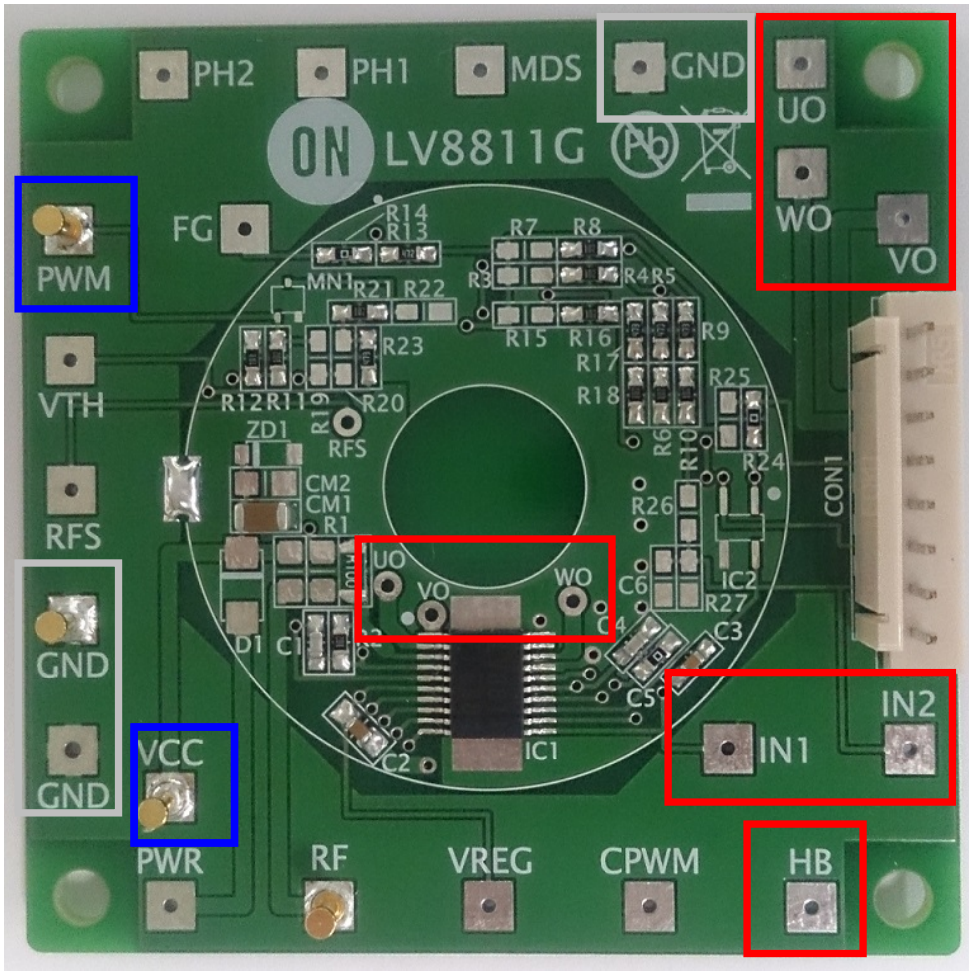

Figure 2. Key Input/Ouput Highlighted

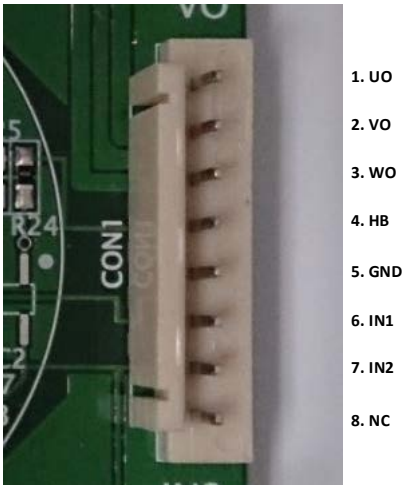

Figure 3. Pin header CON1

4. Minimum Duty Cycle Setting

To set the minimum duty cycle, a user needs to solder chip resistors.
The minimum duty cycle for disable (stop) D_{MIND} is determined by the voltage level V_{MDS} at MDS pin.

$$D_{MIND} = \frac{48-4}{2.906-0.141}(V_{MDS}-0.141)+4 = 15.9V_{MDS}+1.758$$

when $V_{MDS} = 0$

$$D_{MIND} = 8\%$$

There is 6% of histeresisy between enable (start) and disable (stop) tarnsistions.

$$D_{MINE} = D_{MIND} + 6$$

The voltage level V_{MDS} in this board is determined by resistors.

$$V_{MDS} = V_{REG}\frac{R_{17}+R_{18}}{R_{15}+R_{16}+R_{17}+R_{18}}$$

$V_{REG} = 3[\mathrm{V}]$ in the board

5. Lead angle tuning

To tune the lead angle, a user needs to solder chip resistors.
The minimum lead angle at the lowest rotational speed P_0 is determined by the voltage level V_{PH1} at PH1 pin.

$$P_0 = \frac{60-(-30)}{2.906-0.141}(V_{PH1}-0.141)-30 = 32.55V_{PH1}-34.59$$

when $V_{PH1} = 0$

$$P_O = 15°$$

The lead angle P is dynamically adjusted with respect to FG frequency fFG.

$$P = AfV_{FG} + P_0$$

$$A = \frac{0.3}{2.906-0.141}(V_{PH2}-0.141) = 0.1085V_{PH2}$$

when $V_{PH2} = 0$

$$A = 0.15°/Hz$$

The voltage levels V_{PH1} and V_{PH2} in this board are determined by resistors.

$$V_{PH1} = V_{REG}\frac{R_5+R_6}{R_3+R_4+R_5+R_6}$$

$$V_{PH2} = V_{REG}\frac{R_9+R_{10}}{R_7+R_8+R_9+R_{10}}$$

$V_{REG} = 3[\mathrm{V}]$ in the board

*The calculating formula of the adjustment of MDS and PH1,PH2 becomes the reference level. Please confirm real movement with a motor to use.

APPENDIX A: schematic

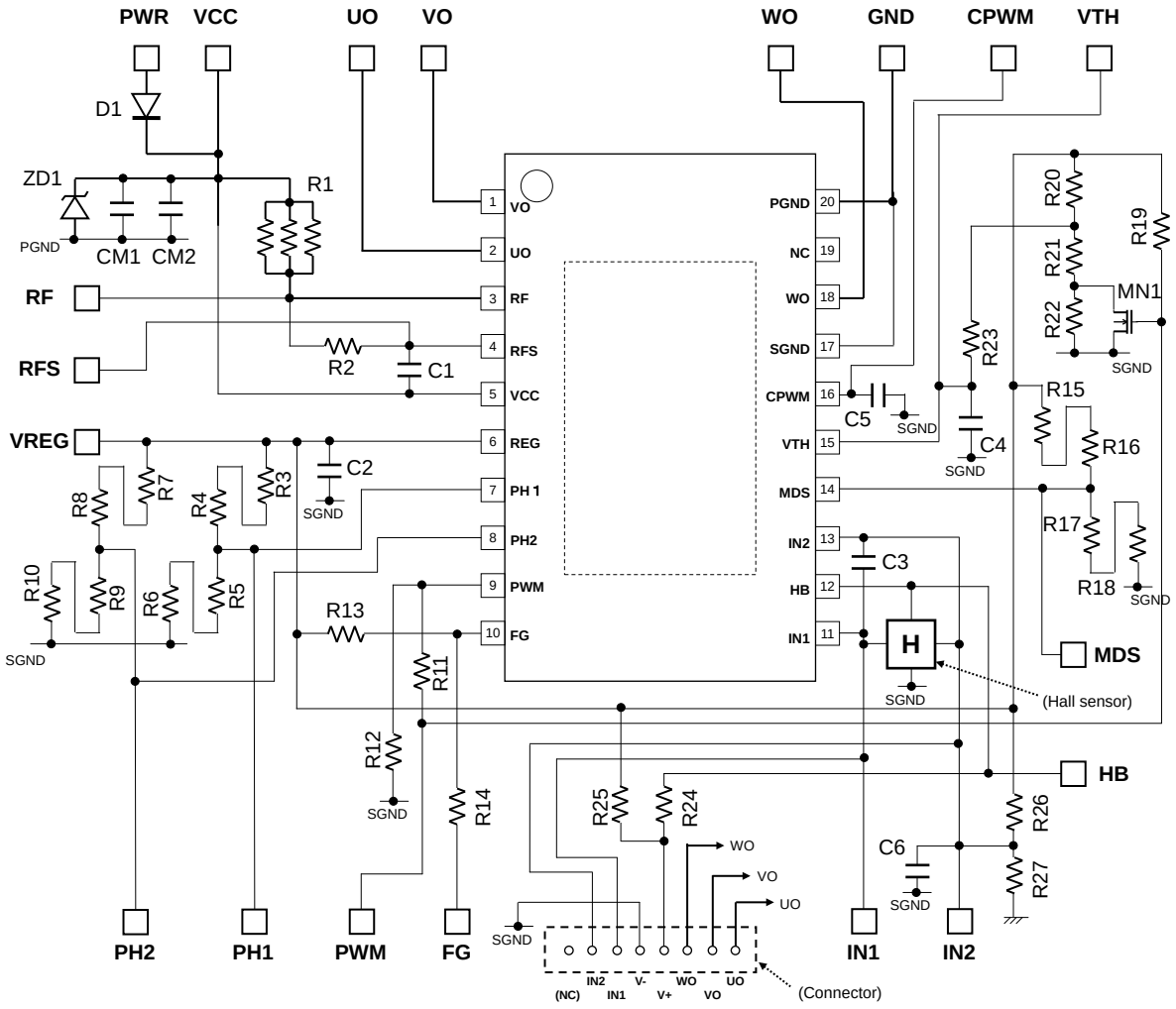

*Notice:LV8814J do not include the exposed-PAD

The hall sensor is not mounted on the board.

APPENDIX B: Bill of Material

Part No.	Value	Part No.	Value
D1	-	R11	1k_ohm
ZD1	-	R12	10k_ohm
CM1	4.7uF	R13	4.7k_ohm
CM2	-	R14	0_ohm
C1	1,500pF	R15	-
C2	1uF	R16	1k_ohm
C3	0.01uF	R17	47k_ohm
C4	1,000pF	R18	1k_ohm
C5	0_ohm	R19	-
C6	-	R20	-
CON1	DF1- 8P-2.5DSA(05)	R21	1k_ohm
R1	0.1_ohm	R22	-
R2	1k_ohm	R23	47k_ohm
R3	-	R24	0_ohm
R4	1k_ohm	R25	-
R5	47k_ohm	R26	-
R6	1k_ohm	R27	-
R7	-		
R8	1k_ohm	MN1	-
R9	47k_ohm		
R10	1k_ohm		-

APPENDIX C: When speed adjustment is performed by VTH.

Part No.	Value	Part No.	Value
D1	-	R11	-
ZD1	-	R12	10k_ohm
CM1	4.7uF	R13	4.7k_ohm
CM2	-	R14	0_ohm
C1	1,500pF	R15	-
C2	1uF	R16	1k_ohm
C3	0.01uF	R17	47k_ohm
C4	1,000pF	R18	1k_ohm
C5	390pF	R19	0_ohm
C6	-	R20	6.8k_ohm
CON1	DF1- 8P-2.5DSA(05)	R21	1.8k_ohm
R1	0.2_ohm (x2)	R22	12k_ohm
R2	1k_ohm	R23	47k_ohm
R3	-	R24	0_ohm
R4	1k_ohm	R25	-
R5	47k_ohm	R26	-
R6	1k_ohm	R27	-
R7	-		
R8	1k_ohm	MN1	3LN01S (ON SEMI)
R9	47k_ohm		
R10	1k_ohm		-

APPENDIX D: About COM1 connector.

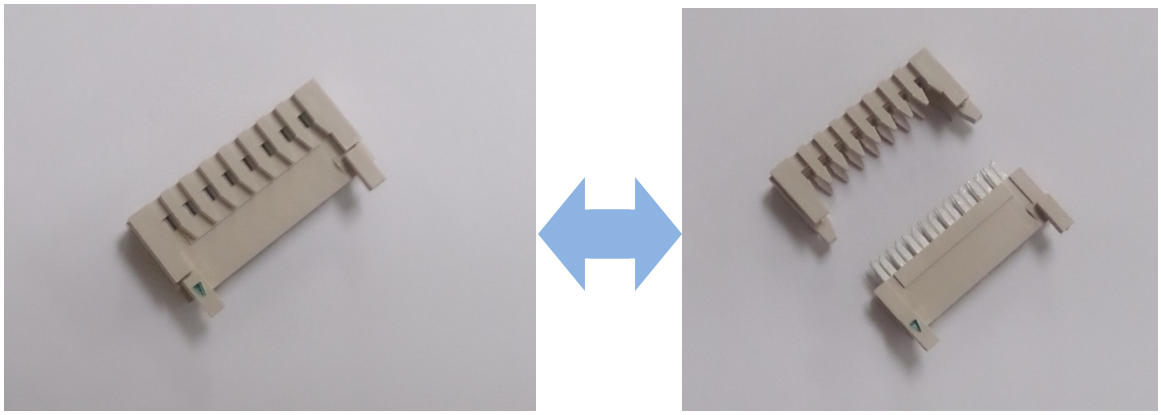

- An exclusive connector is attached to header COM1.
- When hooks of both sides are unlock, it divides into two parts.
- Wiring is pinched by two parts.

Photograph of completion example is shown below.

