Very Low Supply Current 3-Pin Microprocessor Reset Monitors

MAX809 Series, MAX810 Series

The MAX809 and MAX810 are cost−effective system supervisor circuits designed to monitor V_{CC} in digital systems and provide a reset signal to the host processor when necessary. No external components are required.

The reset output is driven active within 10 μsec of V_{CC} falling through the reset voltage threshold. Reset is maintained active for a timeout period which is trimmed by the factory after V_{CC} rises above the reset threshold. The MAX810 has an active−high RESET output while the MAX809 has an active−low $\overline{\text{RESET}}$ output. Both devices are available in SOT−23 and SC−70 packages.

The MAX809/810 are optimized to reject fast transient glitches on the V_{CC} line. Low supply current of 0.5 μA (V_{CC} = 3.2 V) makes these devices suitable for battery powered applications.

Features

- Precision V_{CC} Monitor for 1.5 V, 2.5 V, 3.0 V, 3.3 V, and 5.0 V Supplies
- Precision Monitoring Voltages from 1.2 V to 4.9 V Available in 100 mV Steps
- Four Guaranteed Minimum Power−On Reset Pulse Width Available (1 ms, 20 ms, 100 ms, and 140 ms)
- $\overline{\text{RESET}}$ Output Guaranteed to V_{CC} = 1.0 V.
- Low Supply Current
- Compatible with Hot Plug Applications
- V_{CC} Transient Immunity
- No External Components
- Wide Operating Temperature: −40°C to 105°C
- These Devices are Pb−Free and are RoHS Compliant

Typical Applications

- Computers
- Embedded Systems
- Battery Powered Equipment
- Critical Microprocessor Power Supply Monitoring

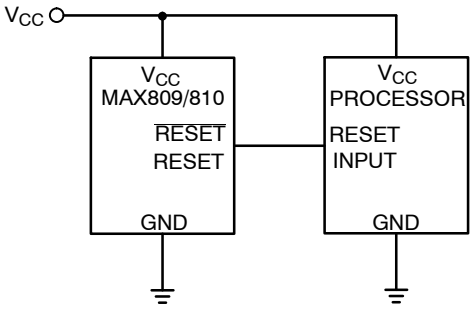

Figure 1. Typical Application Diagram

MARKING DIAGRAMS

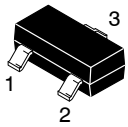

SOT−23 (TO−236) CASE 318

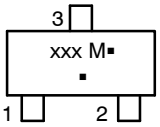

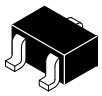

SC−70 (SOT−323) CASE 419

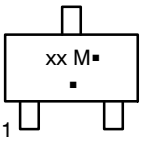

xxx = Specific Device Code
M = Date Code
▪ = Pb−Free Package
(Note: Microdot may be in either location)

PIN CONFIGURATION

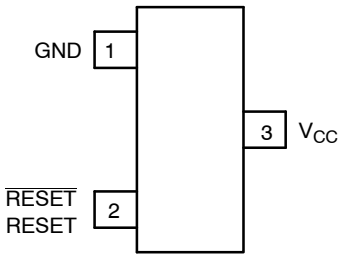

SOT−23/SC−70
(Top View)

NOTE: $\overline{\text{RESET}}$ is for MAX809
RESET is for MAX810

ORDERING INFORMATION

See detailed ordering and shipping information on page 10 of this data sheet.

NOTE: Some of the devices on this data sheet have been **DISCONTINUED**. Please refer to the table on page 10.

DEVICE MARKING INFORMATION

See general marking information in the device marking section on page 10 of this data sheet.

This document contains information on some products that are still under development. **onsemi** reserves the right to change or discontinue these products without notice.

© Semiconductor Components Industries, LLC, 2016

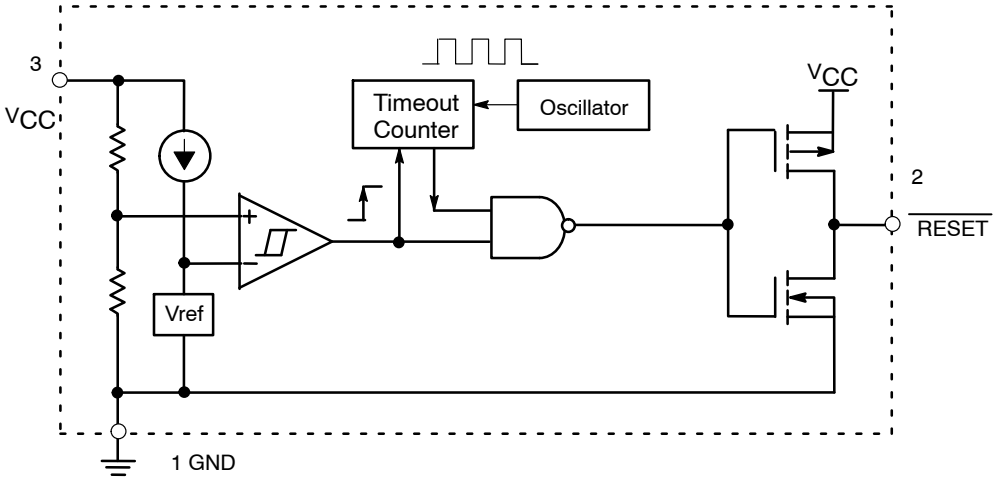

Figure 2. MAX809 Series Complementary Active−Low Output

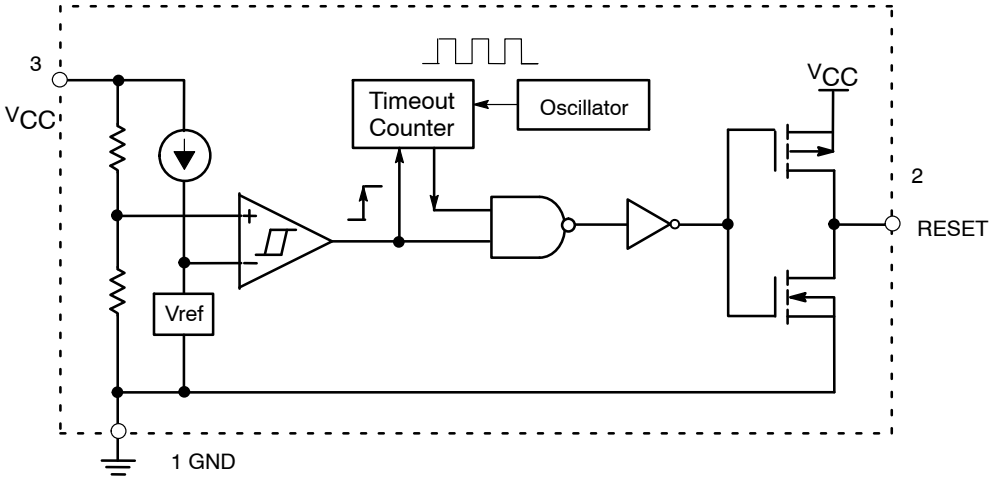

Figure 3. MAX810 Series Complementary Active−High Output

PIN DESCRIPTION

Pin No.	Symbol	Description
1	GND	Ground
2	$\overline{\text{RESET}}$ (MAX809)	$\overline{\text{RESET}}$ output remains low while V_{CC} is below the reset voltage threshold, and for a reset timeout period after V_{CC} rises above reset threshold
2	RESET (MAX810)	RESET output remains high while V_{CC} is below the reset voltage threshold, and for a reset timeout period after V_{CC} rises above reset threshold
3	V_{CC}	Supply Voltage (Typ)

ABSOLUTE MAXIMUM RATINGS

Rating	Symbol	Value	Unit
Power Supply Voltage (V_{CC} to GND)	V_{CC}	−0.3 to 6.0	V
RESET Output Voltage (CMOS)		−0.3 to (V_{CC} + 0.3)	V
Input Current, V_{CC}		20	mA
Output Current, $\overline{\text{RESET}}$		20	mA
dV/dt (V_{CC})		100	V/μsec
Thermal Resistance, Junction−to−Air (Note 1) SOT−23 SC−70	$R_{\theta JA}$	301 314	°C/W
Operating Junction Temperature Range	T_J	−40 to +125	°C
Storage Temperature Range	T_{stg}	−65 to +150	°C
Lead Temperature (Soldering, 10 Seconds)	T_{sol}	+260	°C
ESD Protection Human Body Model (HBM): Following Specification JESD22−A114 Machine Model (MM): Following Specification JESD22−A115		 2000 200	V
Latchup Current Maximum Rating: Following Specification JESD78 Class II Positive Negative	$I_{Latchup}$	 200 200	mA

Stresses exceeding those listed in the Maximum Ratings table may damage the device. If any of these limits are exceeded, device functionality should not be assumed, damage may occur and reliability may be affected.

1. This based on a 35x35x1.6mm FR4 PCB with 10mm^2 of 1 oz copper traces under natural convention conditions and a single component characterization.
2. The maximum package power dissipation limit must not be exceeded.

$$P_D = \frac{T_{J(max)} - T_A}{R_{\theta JA}} \quad \text{with } T_{J(max)} = 150°C$$

ELECTRICAL CHARACTERISTICS T_A = −40°C to +105°C unless otherwise noted. Typical values are at T_A = +25°C. (Note 3)

Characteristic	Symbol	Min	Typ	Max	Unit
V_{CC} Range					V
T_A = 0°C to +70°C		1.0	–	5.5	
T_A = −40°C to +105°C (Note 4)		1.2	–	5.5	
Supply Current	I_{CC}				μA
V_{CC} = 3.3 V					
T_A = −40°C to +85°C		–	0.5	1.2	
T_A = 85°C to +105°C (Note 5)		–	–	2.0	
V_{CC} = 5.5 V					
T_A = −40°C to +85°C		–	0.8	1.8	
T_A = 85°C to +105°C (Note 5)		–	–	2.5	
Reset Threshold (V_{in} Decreasing) (Note 6)	V_{TH}				V
MAX809SN490					
T_A = +25°C		4.83	4.9	4.97	
T_A = −40°C to +85°C		4.78	–	5.02	
T_A = +85°C to +105°C (Note 5)		4.66	–	5.14	
MAX8xxLTR, MAX8xxSQ463					
T_A = +25°C		4.56	4.63	4.70	
T_A = −40°C to +85°C		4.50	–	4.75	
T_A = +85°C to +105°C (Note 5)		4.40	–	4.86	
MAX809HTR					
T_A = +25°C		4.48	4.55	4.62	
T_A = −40°C to +85°C		4.43		4.67	
T_A = +85°C to +105°C (Note 5)		4.32		4.78	
MAX8xxMTR, MAX8xxSQ438					
T_A = +25°C		4.31	4.38	4.45	
T_A = −40°C to +85°C		4.27		4.49	
T_A = +85°C to +105°C (Note 5)		4.16		4.60	
MAX809JTR, MAX8xxSQ400					
T_A = +25°C		3.94	4.00	4.06	
T_A = −40°C to +85°C		3.90	–	4.10	
T_A = +85°C to +105°C (Note 5)		3.80	–	4.20	
MAX8xxTTR, MAX809SQ308					
T_A = +25°C		3.04	3.08	3.11	
T_A = −40°C to +85°C		3.00	–	3.16	
T_A = +85°C to +105°C (Note 5)		2.92	–	3.24	
MAX8xxSTR, MAX8xxSQ293					
T_A = +25°C		2.89	2.93	2.96	
T_A = −40°C to +85°C		2.85	–	3.00	
T_A = +85°C to +105°C (Note 5)		2.78	–	3.08	
MAX8xxRTR, MAX8xxSQ263					
T_A = +25°C		2.59	2.63	2.66	
T_A = −40°C to +85°C		2.56	–	2.70	
T_A = +85°C to +105°C (Note 5)		2.49	–	2.77	
MAX809SN232, MAX809SQ232					
T_A = +25°C		2.28	2.32	2.35	
T_A = −40°C to +85°C		2.25	–	2.38	
T_A = +85°C to +105°C (Note 5)		2.21	–	2.45	
MAX809SN160					
T_A = +25°C		1.58	1.60	1.62	
T_A = −40°C to +85°C		1.56	–	1.64	
T_A = +85°C to +105°C (Note 5)		1.52	–	1.68	
MAX809SN120, MAX8xxSQ120					
T_A = +25°C		1.18	1.20	1.22	
T_A = −40°C to +85°C		1.17	–	1.23	
T_A = +85°C to +105°C (Note 5)		1.14	–	1.26	

Product parametric performance is indicated in the Electrical Characteristics for the listed test conditions, unless otherwise noted. Product performance may not be indicated by the Electrical Characteristics if operated under different conditions.

3. Production testing done at T_A = 25°C, over temperature limits guaranteed by design.
4. For NCV automotive devices, this temperature range is T_A = −40°C to +125°C.
5. For NCV automotive devices, this temperature range is T_A = +85°C to +125°C.
6. Contact your **onsemi** sales representative for other threshold voltage options.

ELECTRICAL CHARACTERISTICS (continued) T_A = −40°C to +105°C unless otherwise noted. Typical values are at T_A = +25°C. (Note 7)

Characteristic	Symbol	Min	Typ	Max	Unit
Detector Voltage Threshold Temperature Coefficient		–	30	–	ppm/°C
V_{CC} to Reset Delay V_{CC} = V_{TH} to (V_{TH} − 100 mV)		–	10	–	μsec
Reset Active TimeOut Period (Note 8) MAX8xxSN(Q)293D1 MAX8xxSN(Q)293D2 MAX8xxSN(Q)293D3 MAX8xxSN(Q)293	t_{RP}	 1.0 20 100 140	 – – – –	 3.3 66 330 460	msec
$\overline{RESET}$ Output Voltage Low (No Load) (MAX809) V_{CC} = V_{TH} − 0.2 V 1.6 V ≤ V_{TH} ≤ 2.0 V, I_{SINK} = 0.5 mA 2.1 V ≤ V_{TH} ≤ 4.0 V, I_{SINK} = 1.2 mA 4.1 V ≤ V_{TH} ≤ 4.9 V, I_{SINK} = 3.2 mA	V_{OL}	–	–	0.3	V
$\overline{RESET}$ Output Voltage High (No Load) (MAX809) V_{CC} = V_{TH} + 0.2 V 1.6 V ≤ V_{TH} ≤ 2.4 V, I_{SOURCE} = 200 μA 2.5 V ≤ V_{TH} ≤ 4.9 V, I_{SOURCE} = 500 μA	V_{OH}	0.8 V_{CC}	–	–	V
RESET Output Voltage High (No Load) (MAX810) V_{CC} = V_{TH} − 0.2 V 1.6 V ≤ V_{TH} ≤ 2.4 V, I_{SOURCE} = 200 μA 2.5 V ≤ V_{TH} ≤ 4.9 V, I_{SOURCE} = 500 μA	V_{OH}	0.8 V_{CC}	–	–	V
RESET Output Voltage Low (No Load) (MAX810) V_{CC} = V_{TH} + 0.2 V 1.6 V ≤ V_{TH} ≤ 2.0 V, I_{SINK} = 0.5 mA 2.1 V ≤ V_{TH} ≤ 4.0 V, I_{SINK} = 1.2 mA 4.1 V ≤ V_{TH} ≤ 4.9 V, I_{SINK} = 3.2 mA	V_{OL}	–	–	0.3	V

Product parametric performance is indicated in the Electrical Characteristics for the listed test conditions, unless otherwise noted. Product performance may not be indicated by the Electrical Characteristics if operated under different conditions.

7. Production testing done at T_A = 25°C, over temperature limits guaranteed by design.
8. Contact your **onsemi** sales representative for timeout options availability for other threshold voltage options.

TYPICAL OPERATING CHARACTERISTICS

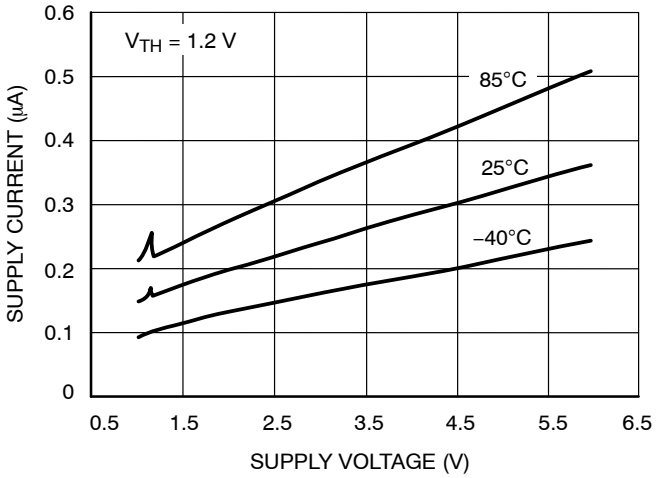

Figure 4. Supply Current vs. Supply Voltage

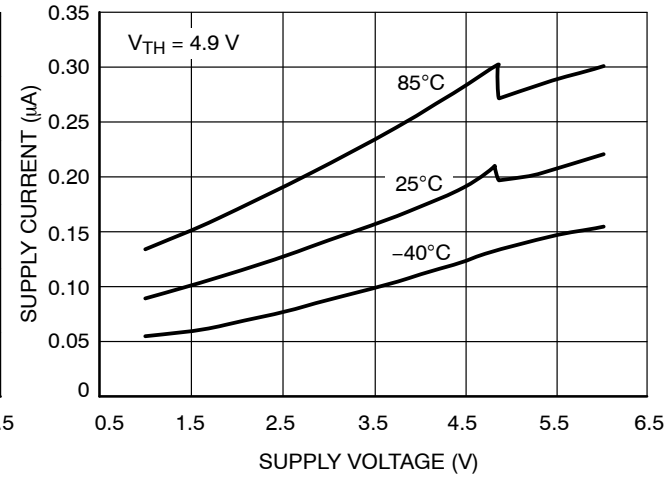

Figure 5. Supply Current vs. Supply Voltage

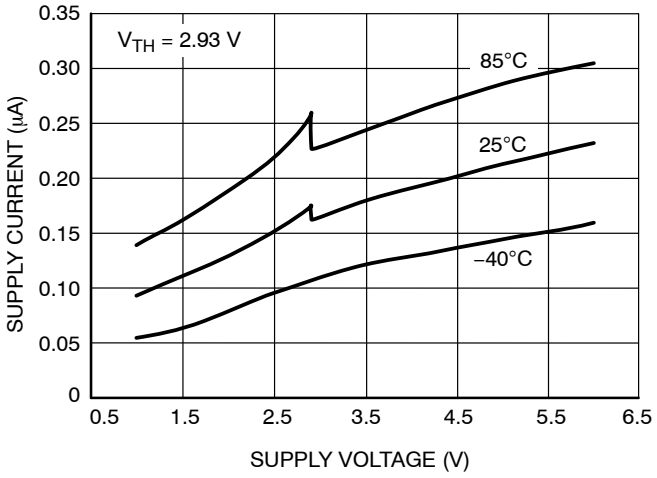

Figure 6. Supply Current vs. Supply Voltage

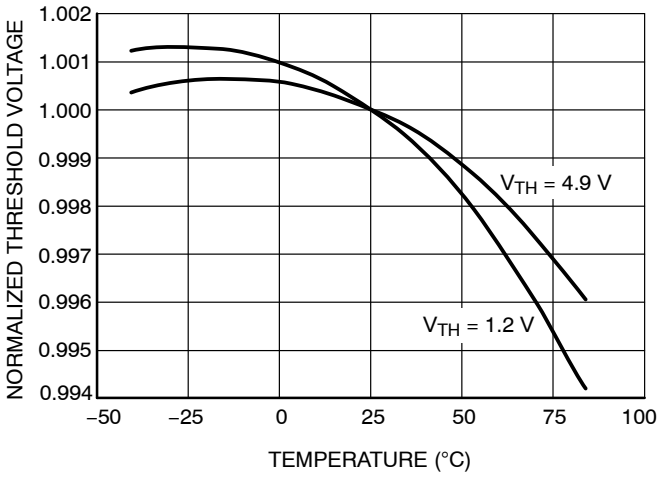

Figure 7. Normalized Reset Threshold Voltage vs. Temperature

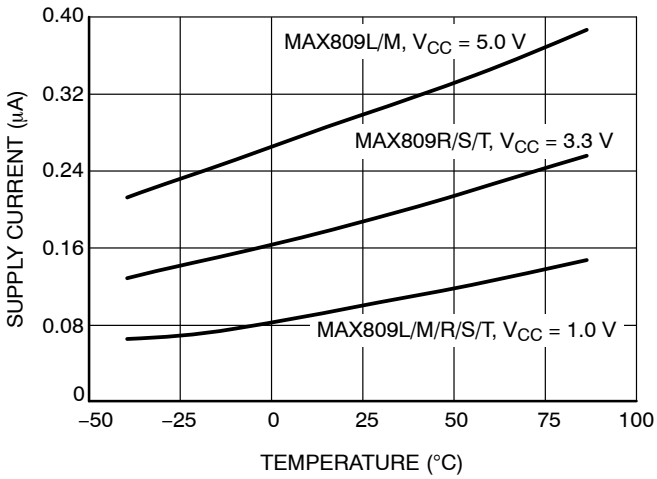

Figure 8. Supply Current vs. Temperature (No Load, MAX809)

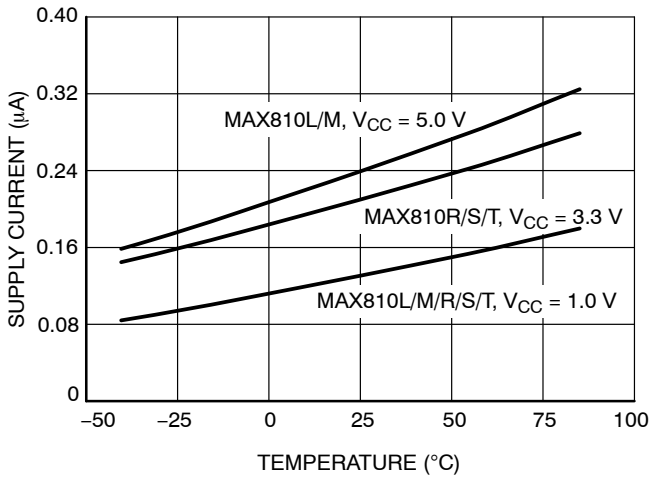

Figure 9. Supply Current vs. Temperature (No Load, MAX810)

TYPICAL OPERATING CHARACTERISTICS

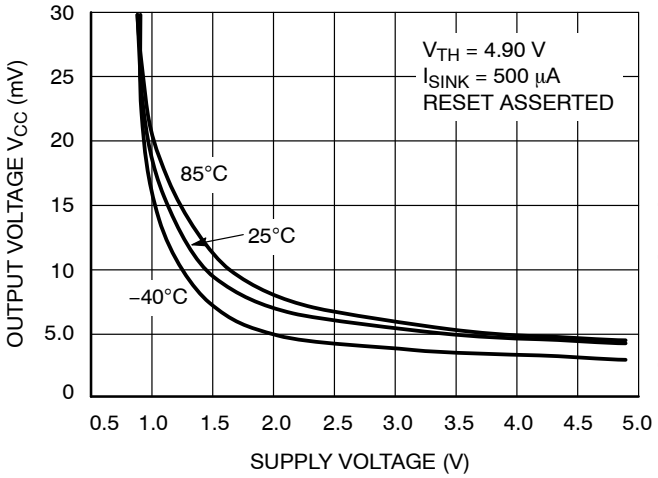

Figure 10. Output Voltage Low vs. Supply Voltage

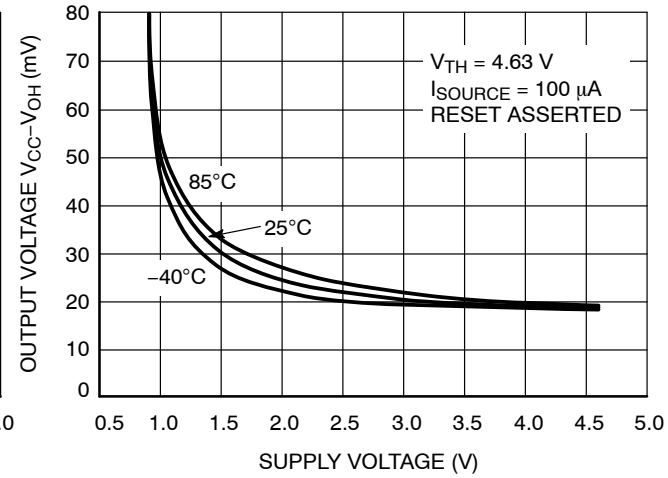

Figure 11. Output Voltage High vs. Supply Voltage

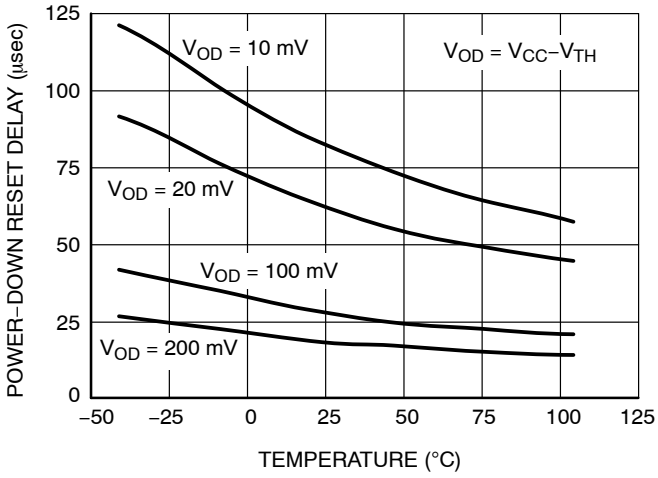

Figure 12. Power−Down Reset Delay vs. Temperature and Overdrive (V_{TH} = 1.2 V)

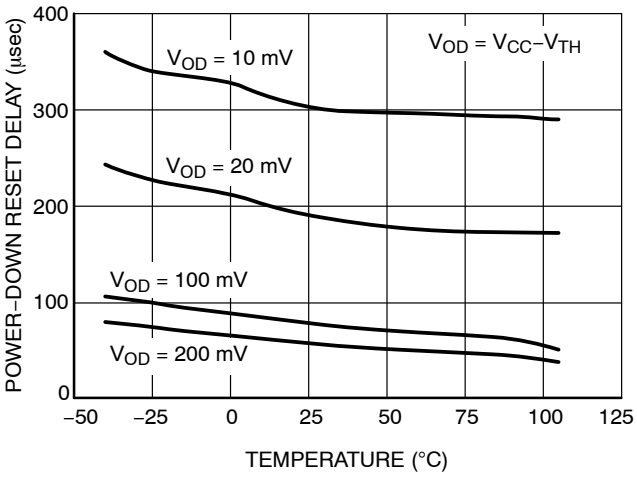

Figure 13. Power−Down Reset Delay vs. Temperature and Overdrive (V_{TH} = 4.9 V)

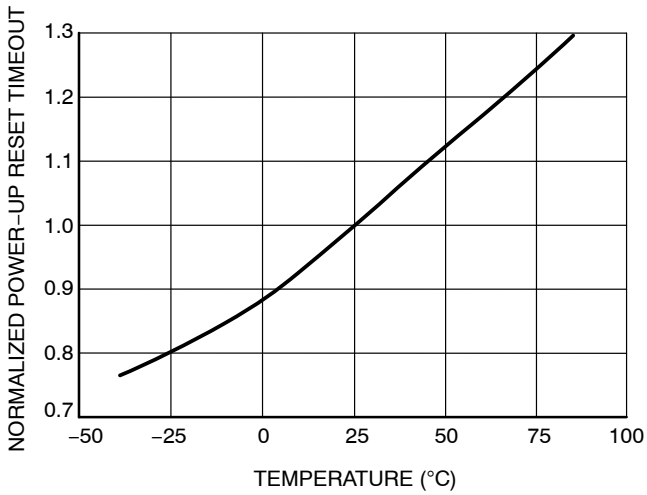

Figure 14. Normalized Power−Up Reset vs. Temperature

Detail Operation Description

The MAX809/810 series microprocessor reset supervisory circuits are designed to monitor the power supplies in digital systems and provide a reset signal to the processor without any external components. Figure 2 shows the timing diagram and a typical application below. Initially consider that input voltage V_{CC} is at a nominal level greater than the voltage detector upper threshold (V_{TH}). And the $\overline{\text{RESET}}$ (RESET) output voltage (Pin 2) will be in the high state for MAX809, or in the low state for MAX 810 devices.

If there is an input power interruption and V_{CC} becomes significantly deficient, it will fall below the lower detector threshold (V_{TH-}). This event causes the RESET output to be in the low state for the MAX809, or in the high state for the NCP810 devices. After completion of the power interruption, V_{CC} will rise to its nominal level and become greater than the V_{TH}. This sequence activates the internal oscillator circuitry and digital counter to count. After the count of the timeout period, the reset output will revert back to the original state.

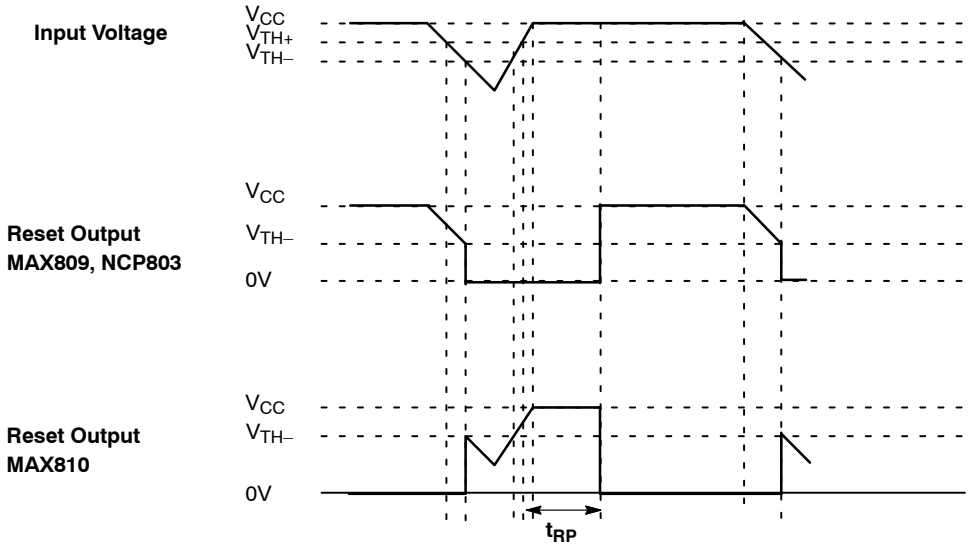

Figure 15. Timing Waveforms

APPLICATIONS INFORMATION

V_{CC} Transient Rejection

The MAX809 provides accurate V_{CC} monitoring and reset timing during power−up, power−down, and brownout/sag conditions, and rejects negative−going transients (glitches) on the power supply line. Figure 16 shows the maximum transient duration vs. maximum negative excursion (overdrive) for glitch rejection. Any combination of duration and overdrive which lies **under** the curve will **not** generate a reset signal. Combinations above the curve are detected as a brownout or power−down. Typically, transient that goes 100 mV below the reset threshold and lasts 5.0 μs or less will not cause a reset pulse. Transient immunity can be improved by adding a capacitor in close proximity to the V_{CC} pin of the MAX809.

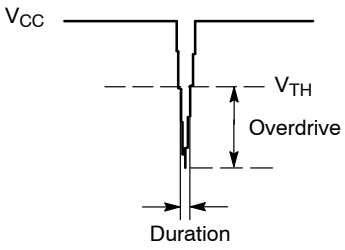

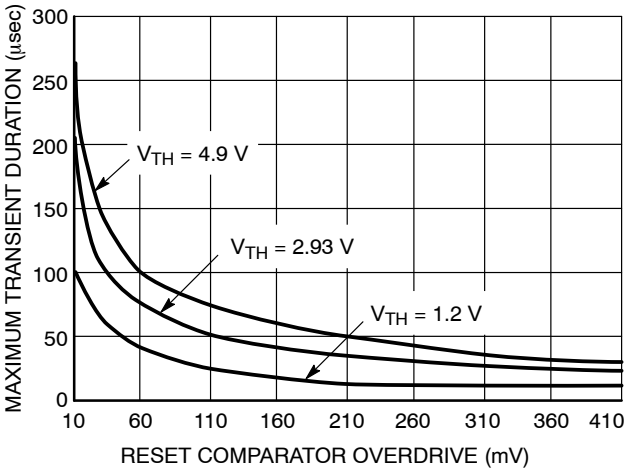

Figure 16. Maximum Transient Duration vs. Overdrive for Glitch Rejection at 25°C

$\overline{\text{RESET}}$ Signal Integrity During Power−Down

The MAX809 $\overline{\text{RESET}}$ output is valid to V_{CC} = 1.0 V. Below this voltage the output becomes an “open circuit” and does not sink current. This means CMOS logic inputs to the Microprocessor will be floating at an undetermined voltage. Most digital systems are completely shutdown well above this voltage. However, in situations where $\overline{\text{RESET}}$ must be maintained valid to V_{CC} = 0 V, a pull−down resistor must be connected from $\overline{\text{RESET}}$ to ground to discharge stray capacitances and hold the output low (Figure 17). This resistor value, though not critical, should be chosen such that it does not appreciably load $\overline{\text{RESET}}$ under normal operation (100 kΩ will be suitable for most applications).

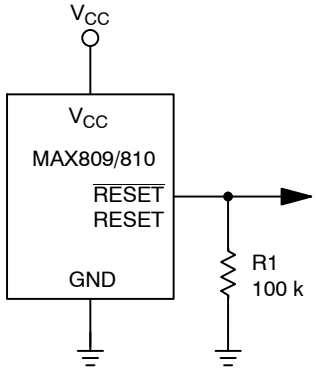

Figure 17. Ensuring RESET Valid to V_{CC} = 0 V

Processors With Bidirectional I/O Pins

Some Microprocessor’s have bidirectional reset pins. Depending on the current drive capability of the processor pin, an indeterminate logic level may result if there is a logic conflict. This can be avoided by adding a 4.7 kΩ resistor in series with the output of the MAX809 (Figure 18). If there are other components in the system which require a reset signal, they should be buffered so as not to load the reset line. If the other components are required to follow the reset I/O of the Microprocessor, the buffer should be connected as shown with the solid line.

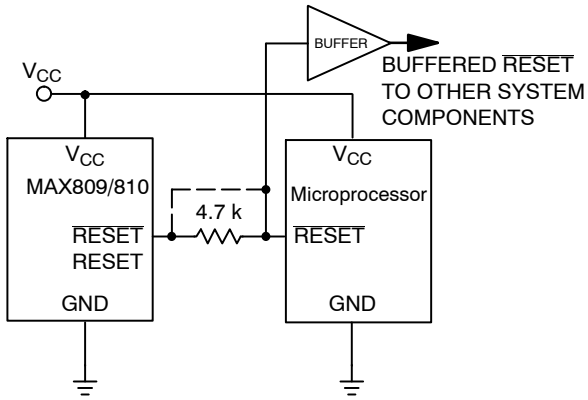

Figure 18. Interfacing to Bidirectional Reset I/O

ORDERING, MARKING AND THRESHOLD INFORMATION

Part Number	V_{TH}* (V)	Timeout* (ms)	Description	Marking	Package	Shipping†
MAX809STRG	2.93	140–460	Push–Pull $\overline{\text{RESET}}$	SPT	SOT23–3 (Pb–Free)	3000 / Tape & Reel
NCV809SN293D2T1G	2.93	20–66		ACE		
NCV809SQ293T1G* (In Development)	2.93	140–460		ZG	SC70–3 (Pb–Free)	3000 / Tape & Reel
MAX809SQ308T1G	3.08	140–460		ZH		
MAX810SQ270T1G	2.70	20–66	Push–Pull $\overline{\text{RESET}}$	ZB	SC70–3 (Pb–Free)	3000 / Tape & Reel
MAX810SQ400T1G	4.00	20–66		ZC		

DISCONTINUED (Note 9)

NCV809LTRG	4.63	140–460	Push–Pull $\overline{\text{RESET}}$	STA	SOT23–3 (Pb–Free)	3000 / Tape & Reel
NCV809MTRG	4.38	140–460	Push–Pull $\overline{\text{RESET}}$	TAT	SOT23–3 (Pb–Free)	3000 / Tape & Reel
NCV809RTRG	2.63	140–460	Push–Pull $\overline{\text{RESET}}$	RPA	SOT23–3 (Pb–Free)	3000 / Tape & Reel
NCV809STRG	2.93	140–460	Push–Pull $\overline{\text{RESET}}$	SUC	SOT23–3 (Pb–Free)	3000 / Tape & Reel
MAX810LTRG	4.63	140–460	Push–Pull $\overline{\text{RESET}}$	SQB	SOT23–3 (Pb–Free)	3000 / Tape & Reel
MAX810MTRG	4.38	140–460	Push–Pull $\overline{\text{RESET}}$	SQA	SOT23–3 (Pb–Free)	3000 / Tape & Reel
MAX810RTRG	2.63	140–460	Push–Pull $\overline{\text{RESET}}$	SPX	SOT23–3 (Pb–Free)	3000 / Tape & Reel
MAX810SN120T1G	1.20	140–460	Push–Pull $\overline{\text{RESET}}$	SSS	SOT23–3 (Pb–Free)	3000 / Tape & Reel
MAX810SN293D1T1G	2.93	1–3.3	Push–Pull $\overline{\text{RESET}}$	SST	SOT23–3 (Pb–Free)	3000 / Tape & Reel
MAX810SN293D2T1G	2.93	20–66	Push–Pull $\overline{\text{RESET}}$	SSU	SOT23–3 (Pb–Free)	3000 / Tape & Reel
MAX810SN293D3T1G	2.93	100–330	Push–Pull $\overline{\text{RESET}}$	SSZ	SOT23–3 (Pb–Free)	3000 / Tape & Reel
MAX810SQ120T1G	1.20	140–460	Push–Pull $\overline{\text{RESET}}$	ZN	SC70–3 (Pb–Free)	3000 / Tape & Reel
MAX810SQ263T1G	2.63	140–460	Push–Pull $\overline{\text{RESET}}$	ZO	SC70–3 (Pb–Free)	3000 / Tape & Reel
MAX810SQ293D1T1G	2.93	1–3.3	Push–Pull $\overline{\text{RESET}}$	ZS	SC70–3 (Pb–Free)	3000 / Tape & Reel
MAX810SQ293D2T1G	2.93	20–66	Push–Pull $\overline{\text{RESET}}$	ZT	SC70–3 (Pb–Free)	3000 / Tape & Reel
MAX810SQ293D3T1G	2.93	100–330	Push–Pull $\overline{\text{RESET}}$	ZU	SC70–3 (Pb–Free)	3000 / Tape & Reel
MAX810SQ293T1G	2.93	140–460	Push–Pull $\overline{\text{RESET}}$	ZP	SC70–3 (Pb–Free)	3000 / Tape & Reel
MAX810SQ438T1G	4.38	140–460	Push–Pull $\overline{\text{RESET}}$	ZQ	SC70–3 (Pb–Free)	3000 / Tape & Reel
MAX810SQ463T1G	4.63	140–460	Push–Pull $\overline{\text{RESET}}$	ZR	SC70–3 (Pb–Free)	3000 / Tape & Reel
MAX810STRG	2.93	140–460	Push–Pull $\overline{\text{RESET}}$	SPY	SOT23–3 (Pb–Free)	3000 / Tape & Reel

ORDERING, MARKING AND THRESHOLD INFORMATION

Part Number	V_{TH}* (V)	Timeout* (ms)	Description	Marking	Package	Shipping†
DISCONTINUED (Note 9)						
MAX810TTRG	3.08	140–460	Push–Pull $\overline{\text{RESET}}$	SPZ	SOT23–3 (Pb–Free)	3000 / Tape & Reel
MAX809HTRG	4.55	140–460	Push–Pull $\overline{\text{RESET}}$	SBD	SOT23–3 (Pb–Free)	3000 / Tape & Reel
MAX809JTRG	4.00	140–460	Push–Pull $\overline{\text{RESET}}$	SPR	SOT23–3 (Pb–Free)	3000 / Tape & Reel
MAX809LTRG	4.63	140–460	Push–Pull $\overline{\text{RESET}}$	SPW	SOT23–3 (Pb–Free)	3000 / Tape & Reel
MAX809MTRG	4.38	140–460	Push–Pull $\overline{\text{RESET}}$	SPV	SOT23–3 (Pb–Free)	3000 / Tape & Reel
MAX809RTRG	2.63	140–460	Push–Pull $\overline{\text{RESET}}$	SPS	SOT23–3 (Pb–Free)	3000 / Tape & Reel
MAX809SN120T1G	1.20	140–460	Push–Pull $\overline{\text{RESET}}$	SSO	SOT23–3 (Pb–Free)	3000 / Tape & Reel
MAX809SN160T1G	1.60	140–460	Push–Pull $\overline{\text{RESET}}$	SAA	SOT23–3 (Pb–Free)	3000 / Tape & Reel
MAX809SN232T1G	2.32	140–460	Push–Pull $\overline{\text{RESET}}$	SQP	SOT23–3 (Pb–Free)	3000 / Tape & Reel
MAX809SN293D1T1G	2.93	1–3.3	Push–Pull $\overline{\text{RESET}}$	SSP	SOT23–3 (Pb–Free)	3000 / Tape & Reel
MAX809SN293D2T1G	2.93	20–66	Push–Pull $\overline{\text{RESET}}$	SSQ	SOT23–3 (Pb–Free)	3000 / Tape & Reel
MAX809SN293D3T1G	2.93	100–330	Push–Pull $\overline{\text{RESET}}$	SSR	SOT23–3 (Pb–Free)	3000 / Tape & Reel
MAX809SN490T1G	4.90	140–460	Push–Pull $\overline{\text{RESET}}$	SBH	SOT23–3 (Pb–Free)	3000 / Tape & Reel
MAX809SQ120T1G	1.20	140–460	Push–Pull $\overline{\text{RESET}}$	ZD	SC70–3 (Pb–Free)	3000 / Tape & Reel
MAX809SQ232T1G	2.32	140–460	Push–Pull $\overline{\text{RESET}}$	ZE	SC70–3 (Pb–Free)	3000 / Tape & Reel
MAX809SQ263T1G	2.63	140–460	Push–Pull $\overline{\text{RESET}}$	ZF	SC70–3 (Pb–Free)	3000 / Tape & Reel
MAX809SQ293D1T1G	2.93	1–3.3	Push–Pull $\overline{\text{RESET}}$	ZK	SC70–3 (Pb–Free)	3000 / Tape & Reel
MAX809SQ293D2T1G	2.93	20–66	Push–Pull $\overline{\text{RESET}}$	ZL	SC70–3 (Pb–Free)	3000 / Tape & Reel
MAX809SQ293D3T1G	2.93	100–330	Push–Pull $\overline{\text{RESET}}$	ZM	SC70–3 (Pb–Free)	3000 / Tape & Reel
MAX809SQ293T1G	2.93	140–460	Push–Pull $\overline{\text{RESET}}$	ZG	SC70–3 (Pb–Free)	3000 / Tape & Reel
MAX809SQ400T1G	4.00	140–460	Push–Pull $\overline{\text{RESET}}$	SZ	SC70–3 (Pb–Free)	3000 / Tape & Reel
MAX809SQ438T1G	4.38	140–460	Push–Pull $\overline{\text{RESET}}$	ZI	SC70–3 (Pb–Free)	3000 / Tape & Reel
MAX809SQ463T1G	4.63	140–460	Push–Pull $\overline{\text{RESET}}$	ZJ	SC70–3 (Pb–Free)	3000 / Tape & Reel

ORDERING, MARKING AND THRESHOLD INFORMATION

Part Number	V_{TH}* (V)	Timeout* (ms)	Description	Marking	Package	Shipping†
DISCONTINUED (Note 9)						
MAX809TTRG	3.08	140−460	Push−Pull $\overline{\text{RESET}}$	SPU	SOT23−3 (Pb−Free)	3000 / Tape & Reel
NCV809SN293D1T1G*	2.93	1−3.3	Push−Pull $\overline{\text{RESET}}$	ACT	SOT23−3 (Pb−Free)	3000 / Tape & Reel

†For information on tape and reel specifications,including part orientation and tape sizes, please refer to our Tape and Reel Packaging Specifications Brochure, BRD8011/D.

*NCV Prefix for Automotive and Other Applications Requiring Unique Site and Control Change Requirements; AEC−Q100 Qualified and PPAP Capable.

Contact your **onsemi sales representative for other threshold voltage options.

9. **DISCONTINUED:** These devices are not recommended for new design. Please contact your **onsemi** representative for information. The most current information on these devices may be available on www.onsemi.com.

MECHANICAL CASE OUTLINE
PACKAGE DIMENSIONS

SC−70 (SOT−323)
CASE 419
ISSUE R

DATE 11 OCT 2022

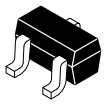

SCALE 4:1

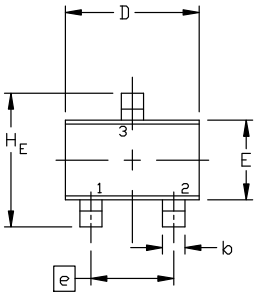

TOP VIEW

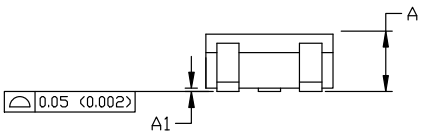

SIDE VIEW

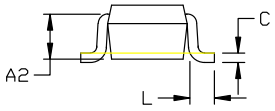

END VIEW

NOTES:
1. DIMENSIONING AND TOLERANCING PER ASME Y14.5M, 1982.
2. CONTROLLING DIMENSION: INCH

	MILLIMETERS			INCHES		
DIM	MIN.	NOM.	MAX.	MIN.	NOM.	MAX.
A	0.80	0.90	1.00	0.032	0.035	0.040
A1	0.00	0.05	0.10	0.000	0.002	0.004
A2	0.70 REF			0.028 BSC		
b	0.30	0.35	0.40	0.012	0.014	0.016
c	0.10	0.18	0.25	0.004	0.007	0.010
D	1.80	2.00	2.20	0.071	0.080	0.087
E	1.15	1.24	1.35	0.045	0.049	0.053
e	1.20	1.30	1.40	0.047	0.051	0.055
e1	0.65 BSC			0.026 BSC		
L	0.20	0.38	0.56	0.008	0.015	0.022
H_E	2.00	2.10	2.40	0.079	0.083	0.095

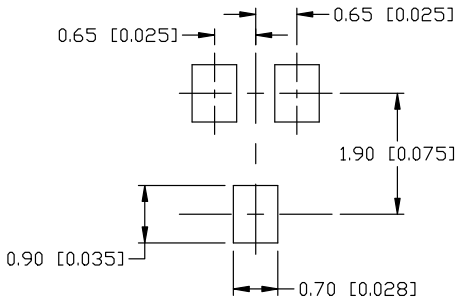

* For additional information on our Pb-Free strategy and soldering details, please download the ON Semiconductor Soldering and Mounting Techniques Reference Manual, SOLDERRM/D.

SOLDERING FOOTPRINT

GENERIC MARKING DIAGRAM

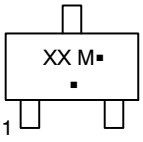

XX = Specific Device Code
M = Date Code
▪ = Pb−Free Package

*This information is generic. Please refer to device data sheet for actual part marking. Pb−Free indicator, “G” or microdot “▪”, may or may not be present. Some products may not follow the Generic Marking.

STYLE 1:
CANCELLED

STYLE 2:
PIN 1. ANODE
2. N.C.
3. CATHODE

STYLE 3:
PIN 1. BASE
2. EMITTER
3. COLLECTOR

STYLE 4:
PIN 1. CATHODE
2. CATHODE
3. ANODE

STYLE 5:
PIN 1. ANODE
2. ANODE
3. CATHODE

STYLE 6:
PIN 1. EMITTER
2. BASE
3. COLLECTOR

STYLE 7:
PIN 1. BASE
2. EMITTER
3. COLLECTOR

STYLE 8:
PIN 1. GATE
2. SOURCE
3. DRAIN

STYLE 9:
PIN 1. ANODE
2. CATHODE
3. CATHODE−ANODE

STYLE 10:
PIN 1. CATHODE
2. ANODE
3. ANODE−CATHODE

STYLE 11:
PIN 1. CATHODE
2. CATHODE
3. CATHODE

DOCUMENT NUMBER:	**98ASB42819B**	Electronic versions are uncontrolled except when accessed directly from the Document Repository. Printed versions are uncontrolled except when stamped “CONTROLLED COPY” in red.
DESCRIPTION:	**SC−70 (SOT−323)**	**PAGE 1 OF 1**

onsemi and ONSEMI. are trademarks of Semiconductor Components Industries, LLC dba **onsemi** or its subsidiaries in the United States and/or other countries. **onsemi** reserves the right to make changes without further notice to any products herein. **onsemi** makes no warranty, representation or guarantee regarding the suitability of its products for any particular purpose, nor does **onsemi** assume any liability arising out of the application or use of any product or circuit, and specifically disclaims any and all liability, including without limitation special, consequential or incidental damages. **onsemi** does not convey any license under its patent rights nor the rights of others.

© Semiconductor Components Industries, LLC, 2019

onsemi, , and other names, marks, and brands are registered and/or common law trademarks of Semiconductor Components Industries, LLC dba "**onsemi**" or its affiliates and/or subsidiaries in the United States and/or other countries. **onsemi** owns the rights to a number of patents, trademarks, copyrights, trade secrets, and other intellectual property. A listing of **onsemi**'s product/patent coverage may be accessed at www.onsemi.com/site/pdf/Patent−Marking.pdf. **onsemi** reserves the right to make changes at any time to any products or information herein, without notice. The information herein is provided "as−is" and **onsemi** makes no warranty, representation or guarantee regarding the accuracy of the information, product features, availability, functionality, or suitability of its products for any particular purpose, nor does **onsemi** assume any liability arising out of the application or use of any product or circuit, and specifically disclaims any and all liability, including without limitation special, consequential or incidental damages. Buyer is responsible for its products and applications using **onsemi** products, including compliance with all laws, regulations and safety requirements or standards, regardless of any support or applications information provided by **onsemi**. "Typical" parameters which may be provided in **onsemi** data sheets and/or specifications can and do vary in different applications and actual performance may vary over time. All operating parameters, including "Typicals" must be validated for each customer application by customer's technical experts. **onsemi** does not convey any license under any of its intellectual property rights nor the rights of others. **onsemi** products are not designed, intended, or authorized for use as a critical component in life support systems or any FDA Class 3 medical devices or medical devices with a same or similar classification in a foreign jurisdiction or any devices intended for implantation in the human body. Should Buyer purchase or use **onsemi** products for any such unintended or unauthorized application, Buyer shall indemnify and hold **onsemi** and its officers, employees, subsidiaries, affiliates, and distributors harmless against all claims, costs, damages, and expenses, and reasonable attorney fees arising out of, directly or indirectly, any claim of personal injury or death associated with such unintended or unauthorized use, even if such claim alleges that **onsemi** was negligent regarding the design or manufacture of the part. **onsemi** is an Equal Opportunity/Affirmative Action Employer. This literature is subject to all applicable copyright laws and is not for resale in any manner.

ADDITIONAL INFORMATION

TECHNICAL PUBLICATIONS:
Technical Library: www.onsemi.com/design/resources/technical−documentation
onsemi Website: www.onsemi.com

ONLINE SUPPORT: www.onsemi.com/support
For additional information, please contact your local Sales Representative at www.onsemi.com/support/sales