MC10E016, MC100E016

5.0 V ECL 8-Bit Synchronous Binary Up Counter

ON Semiconductor®

www.onsemi.com

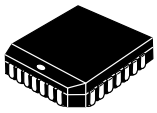

PLCC−28
FN SUFFIX
CASE 776−02

Description

The MC10E/100E016 is a high-speed synchronous, presettable, cascadable 8-bit binary counter. Architecture and operation are the same as the MC10H016 in the MECL 10H™ family, extended to 8-bits, as shown in the logic symbol.

The counter features internal feedback of $\overline{TC}$, gated by the TCLD (terminal count load) pin. When TCLD is LOW (or left open, in which case it is pulled LOW by the internal pull-downs), the $\overline{TC}$ feedback is disabled, and counting proceeds continuously, with $\overline{TC}$ going LOW to indicate an all-one state. When TCLD is HIGH, the $\overline{TC}$ feedback causes the counter to automatically reload upon $\overline{TC}$ = LOW, thus functioning as a programmable counter. The Q_n outputs do not need to be terminated for the count function to operate properly. To minimize noise and power, unused Q outputs should be left unterminated.

The 100 series contains temperature compensation.

Features

- 700 MHz Min. Count Frequency
- 1000 ps CLK to Q, $\overline{TC}$
- Internal $\overline{TC}$ Feedback (Gated)
- 8-Bit
- Fully Synchronous Counting and $\overline{TC}$ Generation
- Asynchronous Master Reset
- PECL Mode Operating Range: V_{CC} = 4.2 V to 5.7 V with V_{EE} = 0 V
- NECL Mode Operating Range: V_{CC} = 0 V with V_{EE} = −4.2 V to −5.7 V
- These Devices are Pb-Free, Halogen Free and are RoHS Compliant

MARKING DIAGRAM*



xxx	= 10 or 100
A	= Assembly Location
WL	= Wafer Lot
YY	= Year
WW	= Work Week
G	= Pb-Free Package

*For additional marking information, refer to Application Note AND8002/D.

ORDERING INFORMATION

Device	Package	Shipping
MC10E016FNG	PLCC−28 (Pb-Free)	37 Units/Tube
MC10E016FNR2G	PLCC−28 (Pb-Free)	500 Tape & Reel
MC100E016FNG	PLCC−28 (Pb-Free)	37 Units/Tube
MC100E016FNR2G	PLCC−28 (Pb-Free)	500 Tape & Reel

†For information on tape and reel specifications, including part orientation and tape sizes, please refer to our Tape and Reel Packaging Specifications Brochure, BRD8011/D.

© Semiconductor Components Industries, LLC, 2016

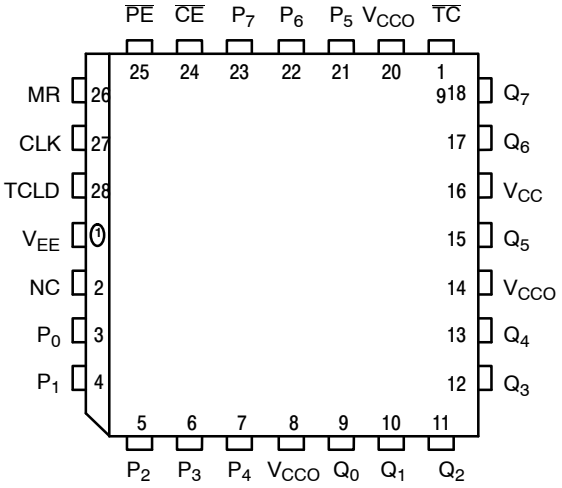

All V_{CC} and V_{CCO} pins are tied together on the die.
Warning: All V_{CC}, V_{CCO}, and V_{EE} pins must be externally connected to Power Supply to guarantee proper operation.

Figure 1. 28-Lead Pinout Assignment (Top View)

Table 1. PIN DESCRIPTION

PIN	FUNCTION
P0 – P_7	ECL Parallel Data (Preset) Inputs
Q_0 – Q_7	ECL Data Outputs
CE	ECL Count Enable Control Input
PE	ECL Parallel Load Enable Control Input
MR	ECL Master Reset
CLK	ECL Clock
TC	ECL Terminal Count Output
TCLD	ECL TC–Load Control Input
NC	No Connect
V_{CC}, V_{CCO}	Positive Supply
V_{EE}	Negative Supply

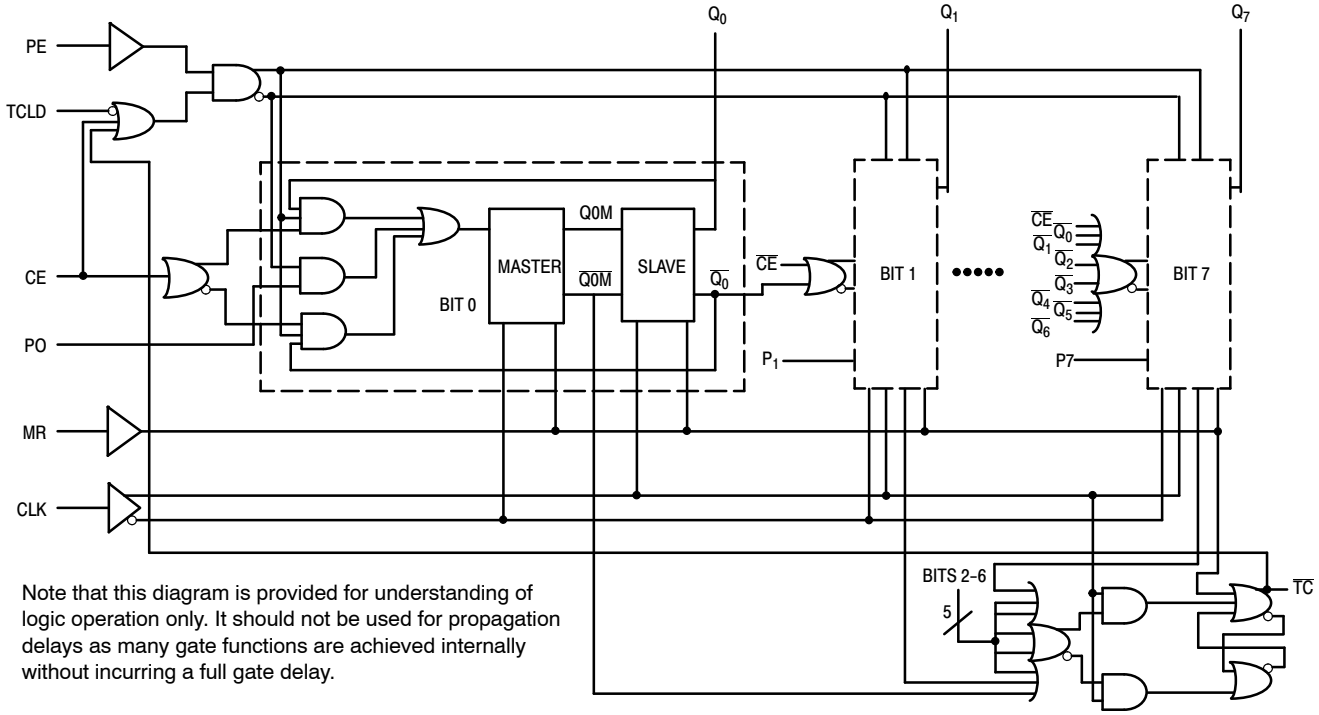

Note that this diagram is provided for understanding of logic operation only. It should not be used for propagation delays as many gate functions are achieved internally without incurring a full gate delay.

Figure 2. 8-Bit Binary Counter Logic Counter

Table 2. FUNCTION TABLE

FUNCTION	CE	PE	TCLD	MR	CLK
Load Parallel (P_n to Q_n)	X	L	X	L	Z
Continuous Count	L	H	L	L	Z
Count; Load Parallel on $\overline{TC}$ = LOW	L	H	H	L	Z
Hold	H	H	X	L	Z
Masters Respond, Slaves Hold	X	X	X	L	ZZ
Reset (Q_n : = LOW, $\overline{TC}$: = HIGH)	X	X	X	H	X

Z = clock pulse (low to high);
ZZ = clock pulse (high to low)

Table 3. EXPANDED FUNCTION TABLE

Function	PE	CE	MR	TCLD	CLK	P7−P4	P3	P2	P1	P0	Q7−Q4	Q3	Q2	Q1	Q0	TC
Load	L	X	L	X	Z	H	H	H	L	L	H	H	H	L	L	H
Count	H	L	L	L	Z	X	X	X	X	X	H	H	H	L	H	H
	H	L	L	L	Z	X	X	X	X	X	H	H	H	H	L	H
	H	L	L	L	Z	X	X	X	X	X	H	H	H	H	H	L
	H	L	L	L	Z	X	X	X	X	X	L	L	L	L	L	H
Load	L	X	L	X	Z	H	H	H	L	L	H	H	H	L	L	H
Hold	H	H	L	X	Z	X	X	X	X	X	H	H	H	L	L	H
	H	H	L	X	Z	X	X	X	X	X	H	H	H	L	L	H
Load On	H	L	L	H	Z	H	L	H	H	L	H	H	H	L	H	H
Terminal	H	L	L	H	Z	H	L	H	H	L	H	H	H	H	L	H
Count	H	L	L	H	Z	H	L	H	H	L	H	H	H	H	H	L
	H	L	L	H	Z	H	L	H	H	L	H	L	H	H	L	H
	H	L	L	H	Z	H	L	H	H	L	H	L	H	H	H	H
	H	L	L	H	Z	H	L	H	H	L	H	H	L	L	L	H
Reset	X	X	H	X	X	X	X	X	X	X	L	L	L	L	L	H

Table 4. ATTRIBUTES

Characteristics	Value
Internal Input Pulldown Resistor	50 kΩ
Internal Input Pullup Resistor	50 kΩ
ESD Protection Human Body Model Machine Model	 > 2 kV > 200 V
Moisture Sensitivity, Indefinite Time Out of Drypack (Note 1) PLCC−28	Pb-Free Pkg Level 3
Flammability Rating Oxygen Index: 28 to 34	 UL 94 V−0 @ 0.125 in
Transistor Count	592 Devices
Meets or exceeds JEDEC Spec EIA/JESD78 IC Latchup Test	

1. For additional information, see Application Note AND8003/D.

Table 5. MAXIMUM RATINGS

Symbol	Parameter	Condition 1	Condition 2	Rating	Unit
V_{CC}	PECL Mode Power Supply	V_{EE} = 0 V		8	V
V_I	PECL Mode Input Voltage NECL Mode Input Voltage	V_{EE} = 0 V V_{CC} = 0 V	$V_I \le V_{CC}$ $V_I \ge V_{EE}$	6 −6	V
I_{out}	Output Current	Continuous Surge		50 100	mA
T_A	Operating Temperature Range			0 to +85	°C
T_{stg}	Storage Temperature Range			−65 to +150	°C
θ_{JA}	Thermal Resistance (Junction-to-Ambient)	0 lfpm 500 lfpm	PLCC−28 PLCC−28	63.5 43.5	°C/W
θ_{JC}	Thermal Resistance (Junction-to-Case)	Standard Board	PLCC−28	22 to 26	°C/W
T_{sol}	Wave Solder (Pb-Free)			265	°C

Stresses exceeding those listed in the Maximum Ratings table may damage the device. If any of these limits are exceeded, device functionality should not be assumed, damage may occur and reliability may be affected.

Table 6. 10E SERIES PECL DC CHARACTERISTICS (V_{CCx} = 5.0 V; V_{EE} = 0.0 V (Note 1))

Symbol	Characteristic	0°C			25°C			85°C			Unit
		Min	Typ	Max	Min	Typ	Max	Min	Typ	Max	
I_{EE}	Power Supply Current		151	181		151	181		151	181	mA
V_{OH}	Output HIGH Voltage (Note 2)	3980	4070	4160	4020	4105	4190	4090	4185	4280	mV
V_{OL}	Output LOW Voltage (Note 2)	3050	3210	3370	3050	3210	3370	3050	3227	3405	mV
V_{IH}	Input HIGH Voltage	3830	3995	4160	3870	4030	4190	3940	4110	4280	mV
V_{IL}	Input LOW Voltage	3050	3285	3520	3050	3285	3520	3050	3302	3555	mV
I_{IH}	Input HIGH Current			150			150			150	μA
I_{IL}	Input LOW Current	0.5	0.3		0.5	0.25		0.3	0.2		μA

NOTE: Device will meet the specifications after thermal equilibrium has been established when mounted in a test socket or printed circuit board with maintained transverse airflow greater than 500 lfpm. Electrical parameters are guaranteed only over the declared operating temperature range. Functional operation of the device exceeding these conditions is not implied. Device specification limit values are applied individually under normal operating conditions and not valid simultaneously.

1. Input and output parameters vary 1:1 with V_{CC}. V_{EE} can vary −0.46 V / +0.06 V.
2. Outputs are terminated through a 50 Ω resistor to V_{CC} − 2.0 V.

Table 7. 10E SERIES NECL DC CHARACTERISTICS (V_{CCx} = 0.0 V; V_{EE} = −5.0 V (Note 1))

Symbol	Characteristic	0°C			25°C			85°C			Unit
		Min	Typ	Max	Min	Typ	Max	Min	Typ	Max	
I_{EE}	Power Supply Current		151	181		151	181		151	181	mA
V_{OH}	Output HIGH Voltage (Note 2)	−1020	−930	−840	−980	−895	−810	−910	−815	−720	mV
V_{OL}	Output LOW Voltage (Note 2)	−1950	−1790	−1630	−1950	−1790	−1630	−1950	−1773	−1595	mV
V_{IH}	Input HIGH Voltage	−1170	−1005	−840	−1130	−970	−810	−1060	−890	−720	mV
V_{IL}	Input LOW Voltage	−1950	−1715	−1480	−1950	−1715	−1480	−1950	−1698	−1445	mV
I_{IH}	Input HIGH Current			150			150			150	μA
I_{IL}	Input LOW Current	0.5	0.3		0.5	0.065		0.3	0.2		μA

NOTE: Device will meet the specifications after thermal equilibrium has been established when mounted in a test socket or printed circuit board with maintained transverse airflow greater than 500 lfpm. Electrical parameters are guaranteed only over the declared operating temperature range. Functional operation of the device exceeding these conditions is not implied. Device specification limit values are applied individually under normal operating conditions and not valid simultaneously.

1. Input and output parameters vary 1:1 with V_{CC}. V_{EE} can vary −0.46 V / +0.06 V.
2. Outputs are terminated through a 50 Ω resistor to V_{CC} − 2.0 V.

Table 8. 100E SERIES PECL DC CHARACTERISTICS (V_{CCx} = 5.0 V; V_{EE} = 0.0 V (Note 1))

Symbol	Characteristic	0°C			25°C			85°C			Unit
		Min	Typ	Max	Min	Typ	Max	Min	Typ	Max	
I_{EE}	Power Supply Current		151	181		151	181		174	208	mA
V_{OH}	Output HIGH Voltage (Note 2)	3975	4050	4120	3975	4050	4120	3975	4050	4120	mV
V_{OL}	Output LOW Voltage (Note 2)	3190	3295	3380	3190	3255	3380	3190	3260	3380	mV
V_{IH}	Input HIGH Voltage	3835	3975	4120	3835	3975	4120	3835	3975	4120	mV
V_{IL}	Input LOW Voltage	3190	3355	3525	3190	3355	3525	3190	3355	3525	mV
I_{IH}	Input HIGH Current			150			150			150	μA
I_{IL}	Input LOW Current	0.5	0.3		0.5	0.25		0.5	0.2		μA

NOTE: Device will meet the specifications after thermal equilibrium has been established when mounted in a test socket or printed circuit board with maintained transverse airflow greater than 500 lfpm. Electrical parameters are guaranteed only over the declared operating temperature range. Functional operation of the device exceeding these conditions is not implied. Device specification limit values are applied individually under normal operating conditions and not valid simultaneously.

1. Input and output parameters vary 1:1 with V_{CC}. V_{EE} can vary −0.46 V / +0.8 V.
2. Outputs are terminated through a 50 Ω resistor to V_{CC} − 2.0 V.

Table 9. 100E SERIES NECL DC CHARACTERISTICS (V_{CCx} = 0.0 V; V_{EE} = −5.0 V (Note 1))

Symbol	Characteristic	0°C			25°C			85°C			Unit
		Min	Typ	Max	Min	Typ	Max	Min	Typ	Max	
I_{EE}	Power Supply Current		151	181		151	181		174	208	mA
V_{OH}	Output HIGH Voltage (Note 2)	−1025	−950	−880	−1025	−950	−880	−1025	−950	−880	mV
V_{OL}	Output LOW Voltage (Note 2)	−1810	−1705	−1620	−1810	−1745	−1620	−1810	−1740	−1620	mV
V_{IH}	Input HIGH Voltage	−1165	−1025	−880	−1165	−1025	−880	−1165	−1025	−880	mV
V_{IL}	Input LOW Voltage	−1810	−1645	−1475	−1810	−1645	−1475	−1810	−1645	−1475	mV
I_{IH}	Input HIGH Current			150			150			150	μA
I_{IL}	Input LOW Current	0.5	0.3		0.5	0.25		0.5	0.2		μA

NOTE: Device will meet the specifications after thermal equilibrium has been established when mounted in a test socket or printed circuit board with maintained transverse airflow greater than 500 lfpm. Electrical parameters are guaranteed only over the declared operating temperature range. Functional operation of the device exceeding these conditions is not implied. Device specification limit values are applied individually under normal operating conditions and not valid simultaneously.

1. Input and output parameters vary 1:1 with V_{CC}. V_{EE} can vary −0.46 V / +0.8 V.
2. Outputs are terminated through a 50 Ω resistor to V_{CC} − 2.0 V.

Table 10. AC CHARACTERISTICS (V_{CCx}= 5.0 V; V_{EE} = 0.0 V or V_{CCx} = 0.0 V; V_{EE} = −5.0 V (Note 1))

Symbol	Characteristic	0°C			25°C			85°C			Unit
		Min	Typ	Max	Min	Typ	Max	Min	Typ	Max	
f_{MAX}	Maximum Toggle Frequency		700			700			700		MHz
f_{COUNT}	Maximum Count Frequency	700	900		700	900		700	900		MHz
t_{PLH}, t_{PHL}	Propagation Delay to Output										ps
	CLK to Q	500	725	900	500	725	900	500	725	900	
	MR to Q	500	775			775			775		
	CLK to $\overline{TC}$	500	775			775			775		
	MR to $\overline{TC}$	500	775			775			775		
t_s	Setup Time (to CLK +)										ps
t_s	Setup Time (to CLK +)										ps
	Pn	150	−30		150	−30		150	−30		
	CE	600	400		600	400		600	400		
	PE	600	400		600	400		600	400		
	TCLD	500	300		500	300		500	300		
t_h	Hold Time (to CLK +)										
	Pn	350	100		350	100		350	100		
	CE	400	200		400	200		400	200		
	PE	0	200		0	200		0	200		
	TCLD	100	−300		100	−300		100	−300		
t_{RR}	Reset Recovery Time	900	700		900	700		900	700		ps
t_{PW}	Minimum Pulse Width										ps
	CLK, MR	400			400			400			
t_{JITTER}	Random Clock Jitter (RMS)		< 1			< 1			< 1		ps
t_r, t_f	Rise/Fall Times (20−80%)	200	510	700	200	510	700	200	510	700	ps

NOTE: Device will meet the specifications after thermal equilibrium has been established when mounted in a test socket or printed circuit board with maintained transverse airflow greater than 500 lfpm. Electrical parameters are guaranteed only over the declared operating temperature range. Functional operation of the device exceeding these conditions is not implied. Device specification limit values are applied individually under normal operating conditions and not valid simultaneously.

1. 10 Series: V_{EE} can vary −0.46 V / +0.06 V.
   100 Series: V_{EE} can vary −0.46 V / +0.8 V.

APPLICATIONS INFORMATION

Cascading Multiple E016 Devices

For applications which call for larger than 8-bit counters multiple E016s can be tied together to achieve very wide bit width counters. The active low terminal count ($\overline{TC}$) output and count enable input ($\overline{CE}$) greatly facilitate the cascading of E016 devices. Two E016s can be cascaded without the need for external gating, however for counters wider than 16 bits external OR gates are necessary for cascade implementations.

Figure 3 below pictorially illustrates the cascading of 4 E016s to build a 32-bit high frequency counter. Note the E101 gates used to OR the terminal count outputs of the lower order E016s to control the counting operation of the higher order bits. When the terminal count of the preceding device (or devices) goes low (the counter reaches an all 1s state) the more significant E016 is set in its count mode and will count one binary digit upon the next positive clock transition. In addition, the preceding devices will also count one bit thus sending their terminal count outputs back to a high state disabling the count operation of the more significant counters and placing them back into hold modes. Therefore, for an E016 in the chain to count, all of the lower order terminal count outputs must be in the low state. The bit width of the counter can be increased or decreased by simply adding or subtracting E016 devices from Figure 3 and maintaining the logic pattern illustrated in the same figure.

The maximum frequency of operation for the cascaded counter chain is set by the propagation delay of the $\overline{TC}$ output and the necessary setup time of the $\overline{CE}$ input and the propagation delay through the OR gate controlling it (for 16-bit counters the limitation is only the $\overline{TC}$ propagation delay and the $\overline{CE}$ setup time). Figure 3 shows EL01 gates used to control the count enable inputs, however, if the frequency of operation is lower a slower, ECL OR gate can be used. Using the worst case guarantees for these parameters from the ECLinPS data book, the maximum count frequency for a greater than 16-bit counter is 500 MHz and that for a 16-bit counter is 625 MHz.

Note that this assumes the trace delay between the $\overline{TC}$ outputs and the $\overline{CE}$ inputs are negligible. If this is not the case estimates of these delays need to be added to the calculations.

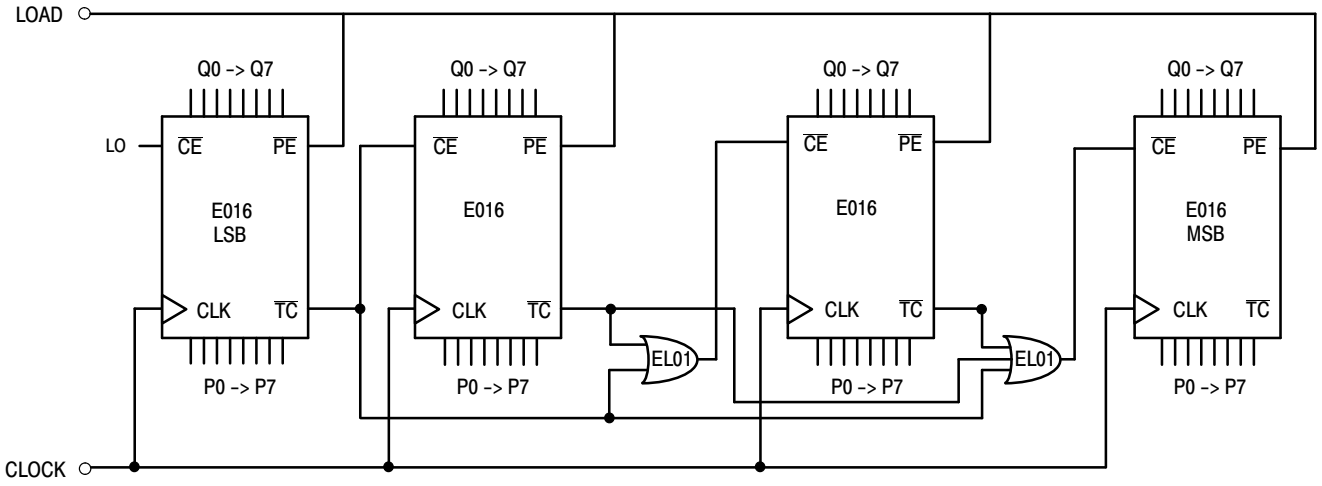

Figure 3. 32-Bit Cascaded E016 Counter

APPLICATIONS INFORMATION (continued)

Programmable Divider

The E016 has been designed with a control pin which makes it ideal for use as an 8-bit programmable divider. The TCLD pin (load on terminal count) when asserted reloads the data present at the parallel input pin (Pn's) upon reaching terminal count (an all 1s state on the outputs). Because this feedback is built internal to the chip, the programmable division operation will run at very nearly the same frequency as the maximum counting frequency of the device. Figure 4 below illustrates the input conditions necessary for utilizing the E016 as a programmable divider set up to divide by 113.

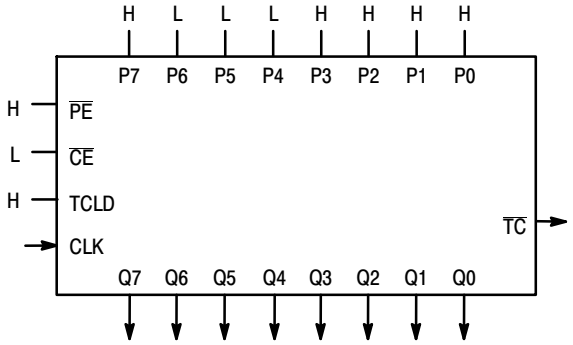

Figure 4. Mod 2 to 256 Programmable Divider

To determine what value to load into the device to accomplish the desired division, the designer simply subtracts the binary equivalent of the desired divide ratio from the binary value for 256. As an example for a divide ratio of 113:

Pn's = 256 − 113 = $8F_{16}$ = 1000 1111

where:

P0 = LSB and P7 = MSB

Forcing this input condition as per the setup in Figure 4 will result in the waveforms of Figure 5. Note that the $\overline{TC}$ output is used as the divide output and the pulse duration is equal to a full clock period. For even divide ratios, twice the desired divide ratio can be loaded into the E016 and the $\overline{TC}$ output can feed the clock input of a toggle flip flop to create a signal divided as desired with a 50% duty cycle.

Table 11. Preset Values for Various Divide Ratios

Divide Ratio	Preset Data Inputs							
	P7	P6	P5	P4	P3	P2	P1	P0
2	H	H	H	H	H	H	H	L
3	H	H	H	H	H	H	L	H
4	H	H	H	H	H	H	L	L
5	H	H	H	H	H	L	H	H
w	w	•	•	•	•	•	•	•
w	•	•	•	•	•	•	•	•
112	H	L	L	H	L	L	L	L
113	H	L	L	L	H	H	H	H
114	H	L	L	L	H	H	H	L
•	•	•	•	•	•	•	•	•
•	•	•	•	•	•	•	•	•
254	L	L	L	L	L	L	H	L
255	L	L	L	L	L	L	L	H
256	L	L	L	L	L	L	L	L

A single E016 can be used to divide by any ratio from 2 to 256 inclusive. If divide ratios of greater than 256 are needed multiple E016s can be cascaded in a manner similar to that already discussed. When E016s are cascaded to build larger dividers the TCLD pin will no longer provide a means for loading on terminal count. Because one does not want to reload the counters until all of the devices in the chain have reached terminal count, external gating of the $\overline{TC}$ pins must be used for multiple E016 divider chains.

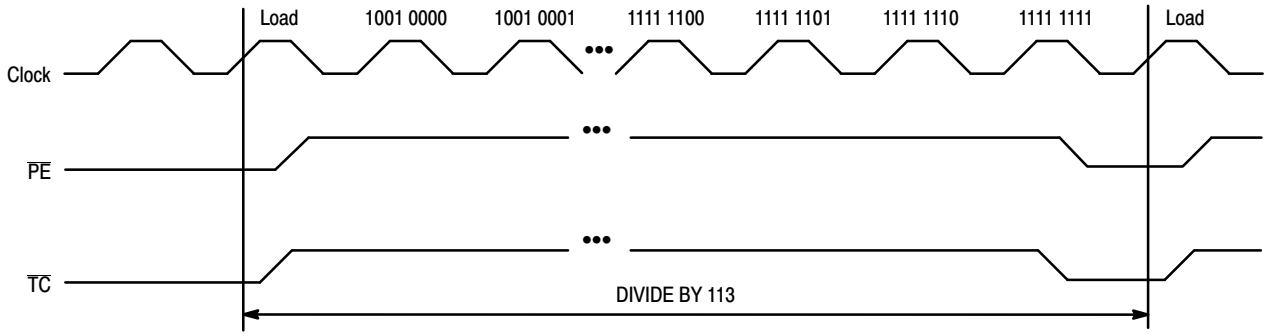

Figure 5. Divide by 113 E016 Programmable Divider Waveforms

APPLICATIONS INFORMATION (continued)

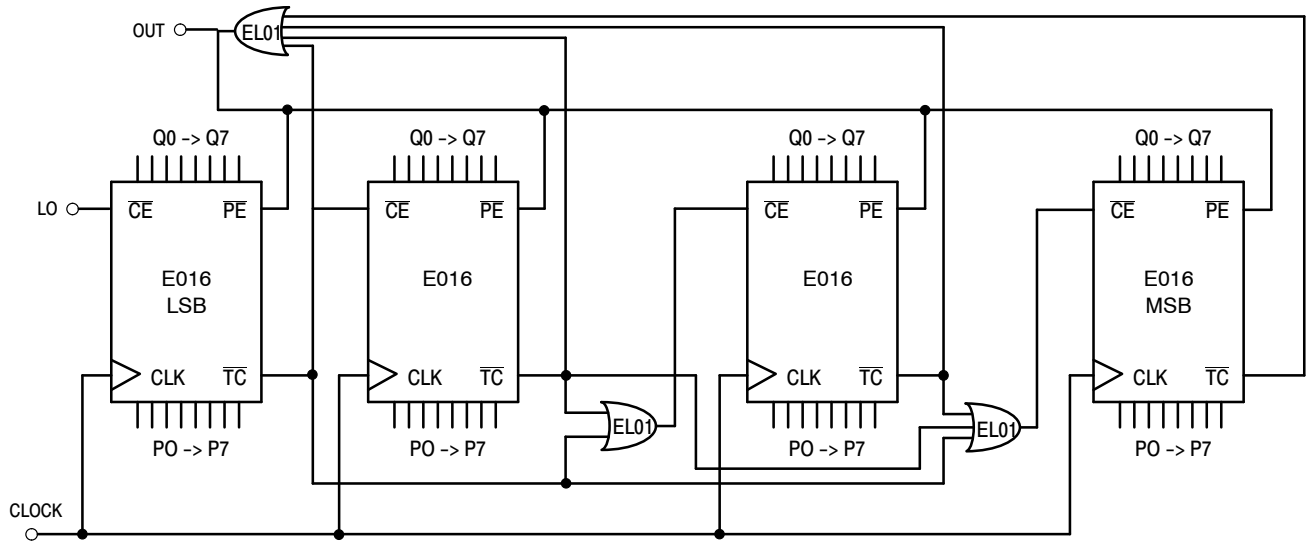

Figure 6. 32-Bit Cascaded E016 Programmable Divider

Figure 6 shows a typical block diagram of a 32-bit divider chain. Once again to maximize the frequency of operation EL01 OR gates were used. For lower frequency applications a slower OR gate could replace the EL01. Note that for a 16-bit divider the OR function feeding the $\overline{PE}$ (program enable) input CANNOT be replaced by a wire OR tie as the $\overline{TC}$ output of the least significant E016 must also feed the $\overline{CE}$ input of the most significant E016. If the two $\overline{TC}$ outputs were OR tied the cascaded count operation would not operate properly. Because in the cascaded form the $\overline{PE}$ feedback is external and requires external gating, the maximum frequency of operation will be significantly less than the same operation in a single device.

Maximizing E016 Count Frequency

The E016 device produces 9 fast transitioning single-ended outputs, thus V_{CC} noise can become significant in situations where all of the outputs switch simultaneously in the same direction. This V_{CC} noise can negatively impact the maximum frequency of operation of the device. Since the device does not need to have the Q outputs terminated to count properly, it is recommended that if the outputs are not going to be used in the rest of the system they should be left unterminated. In addition, if only a subset of the Q outputs are used in the system only those outputs should be terminated. Not terminating the unused outputs will not only cut down the V_{CC} noise generated but will also save in total system power dissipation. Following these guidelines will allow designers to either be more aggressive in their designs or provide them with an extra margin to the published data book specifications.

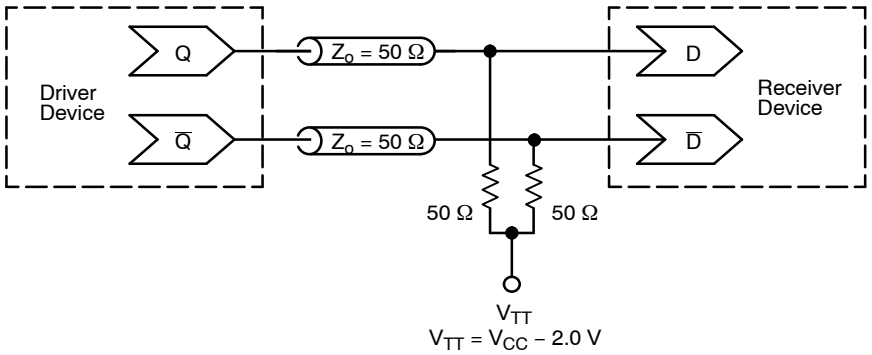

Figure 7. Typical Termination for Output Driver and Device Evaluation (See Application Note AND8020/D – Termination of ECL Logic Devices)

MECL is a trademark of Motorola, Inc. LLC (SCILLC) or its subsidiaries in the United States and/or other countries.

MECHANICAL CASE OUTLINE
PACKAGE DIMENSIONS

ON Semiconductor®

28 LEAD PLLC
CASE 776−02
ISSUE F

DATE 29 JUL 2008

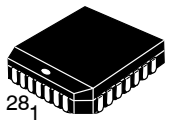

SCALE 1:1

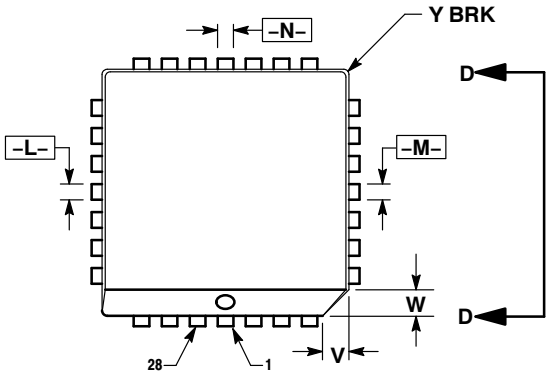

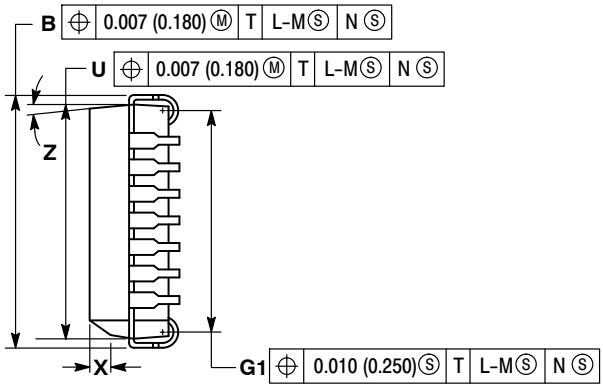

VIEW D–D

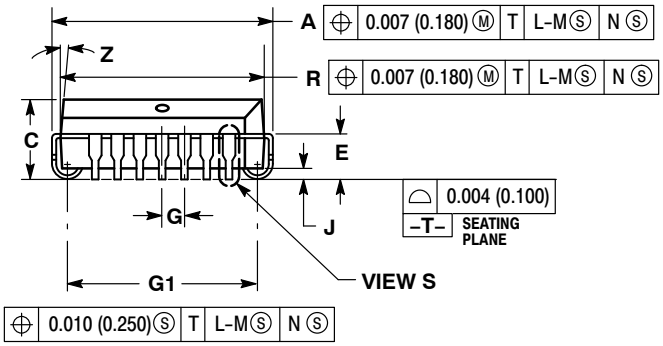

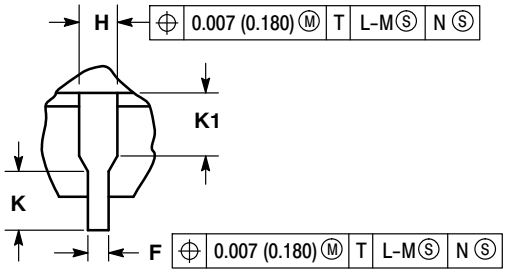

VIEW S

NOTES:
1. DATUMS –L–, –M–, AND –N– DETERMINED WHERE TOP OF LEAD SHOULDER EXITS PLASTIC BODY AT MOLD PARTING LINE.
2. DIMENSION G1, TRUE POSITION TO BE MEASURED AT DATUM –T–, SEATING PLANE.
3. DIMENSIONS R AND U DO NOT INCLUDE MOLD FLASH. ALLOWABLE MOLD FLASH IS 0.010 (0.250) PER SIDE.
4. DIMENSIONING AND TOLERANCING PER ANSI Y14.5M, 1982.
5. CONTROLLING DIMENSION: INCH.
6. THE PACKAGE TOP MAY BE SMALLER THAN THE PACKAGE BOTTOM BY UP TO 0.012 (0.300). DIMENSIONS R AND U ARE DETERMINED AT THE OUTERMOST EXTREMES OF THE PLASTIC BODY EXCLUSIVE OF MOLD FLASH, TIE BAR BURRS, GATE BURRS AND INTERLEAD FLASH, BUT INCLUDING ANY MISMATCH BETWEEN THE TOP AND BOTTOM OF THE PLASTIC BODY.
7. DIMENSION H DOES NOT INCLUDE DAMBAR PROTRUSION OR INTRUSION. THE DAMBAR PROTRUSION(S) SHALL NOT CAUSE THE H DIMENSION TO BE GREATER THAN 0.037 (0.940). THE DAMBAR INTRUSION(S) SHALL NOT CAUSE THE H DIMENSION TO BE SMALLER THAN 0.025 (0.635).

	INCHES		MILLIMETERS	
DIM	MIN	MAX	MIN	MAX
A	0.485	0.495	12.32	12.57
B	0.485	0.495	12.32	12.57
C	0.165	0.180	4.20	4.57
E	0.090	0.110	2.29	2.79
F	0.013	0.021	0.33	0.53
G	0.050 BSC		1.27 BSC	
H	0.026	0.032	0.66	0.81
J	0.020	---	0.51	---
K	0.025	---	0.64	---
R	0.450	0.456	11.43	11.58
U	0.450	0.456	11.43	11.58
V	0.042	0.048	1.07	1.21
W	0.042	0.048	1.07	1.21
X	0.042	0.056	1.07	1.42
Y	---	0.020	---	0.50
Z	2°	10°	2°	10°
G1	0.410	0.430	10.42	10.92
K1	0.040	---	1.02	---

GENERIC MARKING DIAGRAM*

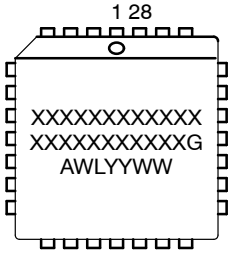

XXXXX = Specific Device Code
A = Assembly Location
WL = Wafer Lot
YY = Year
WW = Work Week
G = Pb−Free Package

*This information is generic. Please refer to device data sheet for actual part marking. Pb−Free indicator, “G” or microdot “ ▪”, may or may not be present.

DOCUMENT NUMBER:	**98ASB42596B**	Electronic versions are uncontrolled except when accessed directly from the Document Repository. Printed versions are uncontrolled except when stamped “CONTROLLED COPY” in red.
DESCRIPTION:	**28 LEAD PLLC**	**PAGE 1 OF 1**

ON Semiconductor and ON are trademarks of Semiconductor Components Industries, LLC dba ON Semiconductor or its subsidiaries in the United States and/or other countries. ON Semiconductor reserves the right to make changes without further notice to any products herein. ON Semiconductor makes no warranty, representation or guarantee regarding the suitability of its products for any particular purpose, nor does ON Semiconductor assume any liability arising out of the application or use of any product or circuit, and specifically disclaims any and all liability, including without limitation special, consequential or incidental damages. ON Semiconductor does not convey any license under its patent rights nor the rights of others.

© Semiconductor Components Industries, LLC, 2019

ON Semiconductor and ON are trademarks of Semiconductor Components Industries, LLC dba ON Semiconductor or its subsidiaries in the United States and/or other countries. ON Semiconductor owns the rights to a number of patents, trademarks, copyrights, trade secrets, and other intellectual property. A listing of ON Semiconductor's product/patent coverage may be accessed at www.onsemi.com/site/pdf/Patent−Marking.pdf. ON Semiconductor reserves the right to make changes without further notice to any products herein. ON Semiconductor makes no warranty, representation or guarantee regarding the suitability of its products for any particular purpose, nor does ON Semiconductor assume any liability arising out of the application or use of any product or circuit, and specifically disclaims any and all liability, including without limitation special, consequential or incidental damages. Buyer is responsible for its products and applications using ON Semiconductor products, including compliance with all laws, regulations and safety requirements or standards, regardless of any support or applications information provided by ON Semiconductor. "Typical" parameters which may be provided in ON Semiconductor data sheets and/or specifications can and do vary in different applications and actual performance may vary over time. All operating parameters, including "Typicals" must be validated for each customer application by customer's technical experts. ON Semiconductor does not convey any license under its patent rights nor the rights of others. ON Semiconductor products are not designed, intended, or authorized for use as a critical component in life support systems or any FDA Class 3 medical devices or medical devices with a same or similar classification in a foreign jurisdiction or any devices intended for implantation in the human body. Should Buyer purchase or use ON Semiconductor products for any such unintended or unauthorized application, Buyer shall indemnify and hold ON Semiconductor and its officers, employees, subsidiaries, affiliates, and distributors harmless against all claims, costs, damages, and expenses, and reasonable attorney fees arising out of, directly or indirectly, any claim of personal injury or death associated with such unintended or unauthorized use, even if such claim alleges that ON Semiconductor was negligent regarding the design or manufacture of the part. ON Semiconductor is an Equal Opportunity/Affirmative Action Employer. This literature is subject to all applicable copyright laws and is not for resale in any manner.

PUBLICATION ORDERING INFORMATION

LITERATURE FULFILLMENT:
Email Requests to: orderlit@onsemi.com

ON Semiconductor Website: www.onsemi.com

TECHNICAL SUPPORT
North American Technical Support:
Voice Mail: 1 800−282−9855 Toll Free USA/Canada
Phone: 011 421 33 790 2910

Europe, Middle East and Africa Technical Support:
Phone: 00421 33 790 2910
For additional information, please contact your local Sales Representative

◊