5 V ECL ÷2, ÷4, ÷8 Clock Generation Chip

MC10EL34, MC100EL34

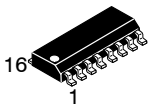

SOIC−16
D SUFFIX
CASE 751B−05

Description

The MC10/100EL34 is a low skew ÷2, ÷4, ÷8 clock generation chip designed explicitly for low skew clock generation applications. The internal dividers are synchronous to each other, therefore, the common output edges are all precisely aligned. The V_{BB} pin, an internally generated voltage supply, is available to this device only. For single-ended input conditions, the unused differential input is connected to V_{BB} as a switching reference voltage. V_{BB} may also rebias AC coupled inputs. When used, decouple V_{BB} and V_{CC} via a 0.01 μF capacitor and limit current sourcing or sinking to 0.5 mA. When not used, V_{BB} should be left open.

The common enable ($\overline{EN}$) is synchronous so that the internal dividers will only be enabled/disabled when the internal clock is already in the LOW state. This avoids any chance of generating a runt clock pulse on the internal clock when the device is enabled/disabled as can happen with an asynchronous control. An internal runt pulse could lead to losing synchronization between the internal divider stages. The internal enable flip−flop is clocked on the falling edge of the input clock, therefore, all associated specification limits are referenced to the negative edge of the clock input.

Upon startup, the internal flip-flops will attain a random state; the master reset (MR) input allows for the synchronization of the internal dividers, as well as multiple EL34s in a system.

The 100 Series contains temperature compensation.

Features

- 50 ps Output-to-Output Skew
- Synchronous Enable/Disable
- Master Reset for Synchronization
- PECL Mode Operating Range:
  - V_{CC} = 4.2 V to 5.7 V with V_{EE} = 0 V
- NECL Mode Operating Range:
  - V_{CC} = 0 V with V_{EE} = −4.2 V to −5.7 V
- Internal Input 75 kΩ Pulldown Resistors on CLK(s), $\overline{EN}$, and MR
- These Devices are Pb-Free, Halogen Free and are RoHS Compliant

MARKING DIAGRAMS*

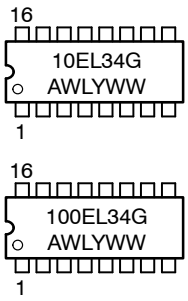

A	= Assembly Location
WL	= Wafer Lot
YY	= Year
WW	= Work Week
G	= Pb-Free Package

*For additional marking information, refer to Application Note AND8002/D.

ORDERING INFORMATION

Device	Package	Shipping
MC10EL34DG	SOIC−16 Pb-Free)	48 Units/Tube

DISCONTINUED (Note 1)

Device	Package	Shipping
MC100EL34DG	SOIC−16 Pb-Free)	48 Units/Tube

1. **DISCONTINUED:** This device is not recommended for new design. Please contact your **onsemi** representative for information. The most current information on this device may be available on www.onsemi.com.

© Semiconductor Components Industries, LLC, 2016

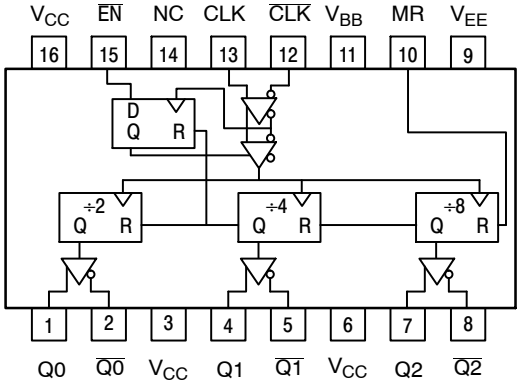

*All V_{CC} pins are tied together on the die.

Warning: All V_{CC} and V_{EE} pins must be externally connected to Power Supply to guarantee proper operation.

Figure 1. Logic Diagram and Pinout Assignment

Table 1. FUNCTION TABLE

CLK*	$\overline{EN}$*	MR*	Function
Z	L	L	Divide
ZZ	H	L	Hold Q_{0-3}
X	X	H	Reset Q_{0-3}

*Pins will default low when left open.
Z = Low-to-High Transition
ZZ = High-to-Low Transition

Table 2. PIN DESCRIPTION

Pin	Function
CLK, $\overline{CLK}$	ECL Diff Clock Inputs
EN	ECL Sync Enable
MR	ECL Master Reset
Q0, $\overline{Q0}$	ECL Diff ÷2 Outputs
Q1, $\overline{Q1}$	ECL Diff ÷4 Outputs
Q2, $\overline{Q2}$	ECL Diff ÷8 Outputs
V_{BB}	Reference Voltage Output
V_{CC}	Positive Supply
V_{EE}	Negative Supply
NC	No Connect

Table 3. ATTRIBUTES

Characteristics	Value
Internal Input Pulldown Resistor	75 KΩ
Internal Input Pullup Resistor	N/A
ESD Protection Human Body Model Machine Model Charge Device Model	 > 1 KV > 100 V > 2 KV
Moisture Sensitivity (Note 1)	Level 1
Flammability Rating Oxygen Index: 28 to 34	UL 94 V−0 @ 0.125 in
Transistor Count	191 Devices
Meets or Exceeds JEDEC Spec EIA/JESD78 IC Latchup Test	

1. For additional Moisture Sensitivity information, refer to Application Note AND8003/D.

Table 4. MAXIMUM RATINGS

Symbol	Parameter	Condition 1	Condition 2	Rating	Unit
V_{CC}	PECL Mode Power Supply	V_{EE} = 0 V		8	V
V_{EE}	NECL Mode Power Supply	V_{CC} = 0 V		−8	V
V_I	PECL Mode Input Voltage NECL Mode Input Voltage	V_{EE} = 0 V V_{CC} = 0 V	$V_I \le V_{CC}$ $V_I \ge V_{EE}$	6 −6	V
I_{out}	Output Current	Continuous Surge		50 100	mA
I_{BB}	V_{BB} Sink/Source			± 0.5	mA
T_A	Operating Temperature Range			−40 to +85	°C
T_{stg}	Storage Temperature Range			−65 to +150	°C
θ_{JA}	Thermal Resistance (Junction-to-Ambient)	0 lfpm 500 lfpm	SOIC−16	130 75	°C/W
θ_{JC}	Thermal Resistance (Junction-to-Case)	Standard Board	SOIC−16	33 to 36	°C/W
T_{sol}	Wave Solder (Pb-Free)	<2 to 3 sec @ 260°C		265	°C

Stresses exceeding those listed in the Maximum Ratings table may damage the device. If any of these limits are exceeded, device functionality should not be assumed, damage may occur and reliability may be affected.

Table 5. 10EL SERIES PECL DC CHARACTERISTICS (V_{CC} = 5.0 V; V_{EE} = 0 V (Note 1))

Symbol	Characteristic	−40°C			25°C			85°C			Unit
		Min	Typ	Max	Min	Typ	Max	Min	Typ	Max	
I_{EE}	Power Supply Current			39			39			39	mA
V_{OH}	Output HIGH Voltage (Note 2)	3920	4010	4110	4020	4105	4190	4090	4185	4280	mV
V_{OL}	Output LOW Voltage (Note 2)	3050	3200	3350	3050	3210	3370	3050	3227	3405	mV
V_{IH}	Input HIGH Voltage (Single-Ended)	3770		4110	3870		4190	3940		4280	mV
V_{IL}	Input LOW Voltage (Single-Ended)	3050		3500	3050		3520	3050		3555	mV
V_{BB}	Output Voltage Reference	3.57		3.7	3.65		3.75	3.69		3.81	V
V_{IHCMR}	Input HIGH Voltage Common Mode Range (Differential) (Note 3)	3.0		4.6	3.0		4.6	3.0		4.6	V
I_{IH}	Input HIGH Current			150			150			150	μA
I_{IL}	Input LOW Current	0.5			0.5			0.3			μA

NOTE: Device will meet the specifications after thermal equilibrium has been established when mounted in a test socket or printed circuit board with maintained transverse airflow greater than 500 lfpm.

1. Input and output parameters vary 1:1 with V_{CC}. V_{EE} can vary +0.06 V / −0.5 V.
2. Outputs are terminated through a 50 Ω resistor to V_{CC} − 2.0 V.
3. V_{IHCMR} min varies 1:1 with V_{EE}, V_{IHCMR} max varies 1:1 with V_{CC}. The V_{IHCMR} range is referenced to the most positive side of the differential input signal. Normal operation is obtained if the HIGH level falls within the specified range and the peak-to-peak voltage lies between V_{PP}min and 1 V.

Table 6. 10EL SERIES NECL DC CHARACTERISTICS (V_{CC} = 0 V; V_{EE} = −5.0 V (Note 1))

Symbol	Characteristic	−40°C			25°C			85°C			Unit
		Min	Typ	Max	Min	Typ	Max	Min	Typ	Max	
I_{EE}	Power Supply Current			39			39			39	mA
V_{OH}	Output HIGH Voltage (Note 2)	−1080	−990	−890	−980	−895	−810	−910	−815	−720	mV
V_{OL}	Output LOW Voltage (Note 2)	−1950	−1800	−1650	−1950	−1790	−1630	−1950	−1773	−1595	mV
V_{IH}	Input HIGH Voltage (Single-Ended)	−1230		−890	−1130		−810	−1060		−720	mV
V_{IL}	Input LOW Voltage (Single-Ended)	−1950		−1500	−1950		−1480	−1950		−1445	mV
V_{BB}	Output Voltage Reference	−1.43		−1.30	−1.35		−1.25	−1.31		−1.19	V
V_{IHCMR}	Input HIGH Voltage Common Mode Range (Differential) (Note 3)	−2.0		−0.4	−2.0		−0.4	−2.0		−0.4	V
I_{IH}	Input HIGH Current			150			150			150	μA
I_{IL}	Input LOW Current	0.5			0.5			0.3			μA

NOTE: Device will meet the specifications after thermal equilibrium has been established when mounted in a test socket or printed circuit board with maintained transverse airflow greater than 500 lfpm.

1. Input and output parameters vary 1:1 with V_{CC}. V_{EE} can vary +0.06 V / −0.5 V.
2. Outputs are terminated through a 50 Ω resistor to V_{CC} − 2.0 V.
3. V_{IHCMR} min varies 1:1 with V_{EE}, V_{IHCMR} max varies 1:1 with V_{CC}. The V_{IHCMR} range is referenced to the most positive side of the differential input signal. Normal operation is obtained if the HIGH level falls within the specified range and the peak-to-peak voltage lies between V_{PP}min and 1 V.

Table 7. 100EL SERIES PECL DC CHARACTERISTICS (V_{CC} = 5.0 V; V_{EE} = 0 V (Note 1))

Symbol	Characteristic	−40°C			25°C			85°C			Unit
		Min	Typ	Max	Min	Typ	Max	Min	Typ	Max	
I_{EE}	Power Supply Current			39			39			42	mA
V_{OH}	Output HIGH Voltage (Note 2)	3915	3995	4120	3975	4045	4120	3975	4050	4120	mV
V_{OL}	Output LOW Voltage (Note 2)	3170	3305	3445	3190	3295	3380	3190	3295	3380	mV
V_{IH}	Input HIGH Voltage (Single-Ended)	3835		4120	3835		4120	3835		4120	mV
V_{IL}	Input LOW Voltage (Single-Ended)	3190		3525	3190		3525	3190		3525	mV
V_{BB}	Output Voltage Reference	3.62		3.74	3.62		3.74	3.62		3.74	V
V_{IHCMR}	Input HIGH Voltage Common Mode Range (Differential Configuration) (Note 3)	2.2		4.6	2.2		4.6	2.2		4.6	V
I_{IH}	Input HIGH Current			150			150			150	μA
I_{IL}	Input LOW Current	0.5			0.5			0.5			μA

NOTE: Device will meet the specifications after thermal equilibrium has been established when mounted in a test socket or printed circuit board with maintained transverse airflow greater than 500 lfpm.

1. Input and output parameters vary 1:1 with V_{CC}. V_{EE} can vary +0.8 V / −0.5 V.
2. Outputs are terminated through a 50 Ω resistor to V_{CC} − 2.0 V.
3. V_{IHCMR} min varies 1:1 with V_{EE}, V_{IHCMR} max varies 1:1 with V_{CC}. The V_{IHCMR} range is referenced to the most positive side of the differential input signal. Normal operation is obtained if the HIGH level falls within the specified range and the peak-to-peak voltage lies between V_{PP}min and 1 V.

Table 8. 100EL SERIES NECL DC CHARACTERISTICS (V_{CC} = 0 V; V_{EE} = −5.0 V (Note 1))

Symbol	Characteristic	−40°C			25°C			85°C			Unit
		Min	Typ	Max	Min	Typ	Max	Min	Typ	Max	
I_{EE}	Power Supply Current			39			39			42	mA
V_{OH}	Output HIGH Voltage (Note 2)	−1085	−1005	−880	−1025	−955	−880	−1025	−955	−880	mV
V_{OL}	Output LOW Voltage (Note 2)	−1830	−1695	−1555	−1810	−1705	−1620	−1810	−1705	−1620	mV
V_{IH}	Input HIGH Voltage (Single-Ended)	−1165		−880	−1165		−880	−1165		−880	mV
V_{IL}	Input LOW Voltage (Single-Ended)	−1810		−1475	−1810		−1475	−1810		−1475	mV
V_{BB}	Output Voltage Reference	−1.38		−1.26	−1.38		−1.26	−1.38		−1.26	V
V_{IHCMR}	Input HIGH Voltage Common Mode Range (Differential Configuration) (Note 3)	−2.8		−0.4	−2.8		−0.4	−2.8		−0.4	V
I_{IH}	Input HIGH Current			150			150			150	μA
I_{IL}	Input LOW Current	0.5			0.5			0.5			μA

NOTE: Device will meet the specifications after thermal equilibrium has been established when mounted in a test socket or printed circuit board with maintained transverse airflow greater than 500 lfpm.

1. Input and output parameters vary 1:1 with V_{CC}. V_{EE} can vary +0.8 V / −0.5 V.
2. Outputs are terminated through a 50 Ω resistor to V_{CC} − 2.0 V.
3. V_{IHCMR} min varies 1:1 with V_{EE}, V_{IHCMR} max varies 1:1 with V_{CC}. The V_{IHCMR} range is referenced to the most positive side of the differential input signal. Normal operation is obtained if the HIGH level falls within the specified range and the peak-to-peak voltage lies between V_{PP}min and 1 V.

Table 9. AC CHARACTERISTICS (V_{CC} = 5.0 V; V_{EE} = 0.0 V or V_{CC} = 0.0 V; V_{EE} = −5.0 V (Note 1))

Symbol	Characteristic	−40°C			25°C			85°C			Unit
		Min	Typ	Max	Min	Typ	Max	Min	Typ	Max	
fmax	Maximum Toggle Frequency	1.1			1.1			1.1			GHz
t_{PLH} t_{PHL}	Propagation CLK to Q0 Delay to CLK to Q1,2 Output MR to Q	 960 900 750		 1200 1140 1060	 960 900 750		 1200 1140 1060	 970 910 790		 1210 1150 1090	ps
t_{SKEW}	Within-Device Skew (Note 2)		100			100			100		ps
t_{JITTER}	Cycle-to-Cycle Jitter		1.0			1.0			1.0		ps
t_S	Setup Time $\overline{EN}$	400			400			400			ps
t_H	Hold Time $\overline{EN}$	250			250			250			ps
t_{RR}	Set/Reset Recovery	400	200		400	200		400	200		ps
V_{PP}	Input Swing (Note 3)	150		1000	150		1000	150		1000	mV
t_r t_f	Output Rise/Fall Times Q (20% − 80%)	225		475	225		475	225		475	ps

NOTE: Device will meet the specifications after thermal equilibrium has been established when mounted in a test socket or printed circuit board with maintained transverse airflow greater than 500 lfpm.

1. 10 Series: V_{EE} can vary +0.06 V / −0.5 V.
   100 Series: V_{EE} can vary +0.8 V / −0.5 V.
2. Within-device skew is defined as identical transitions on similar paths through a device.
3. V_{PP}min is minimum input swing for which AC parameters guaranteed. The device has a DC gain of ≈40.

There are two distinct functional relationships between the Master Reset and Clock:

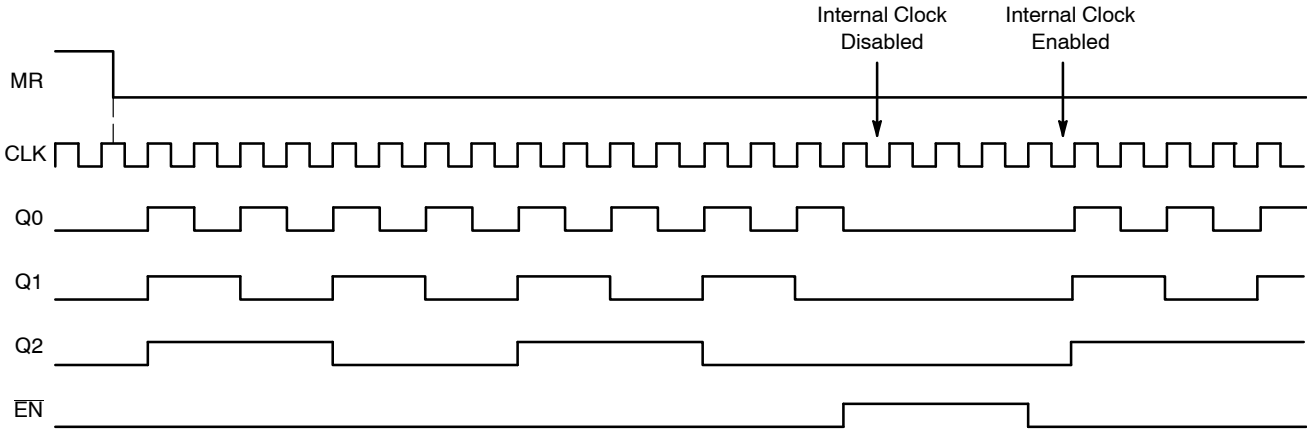

CASE 1: If the MR is De-asserted (H−L), While the Clock is Still High, the Outputs will Follow the First Ensuing Clock Rising Edge.

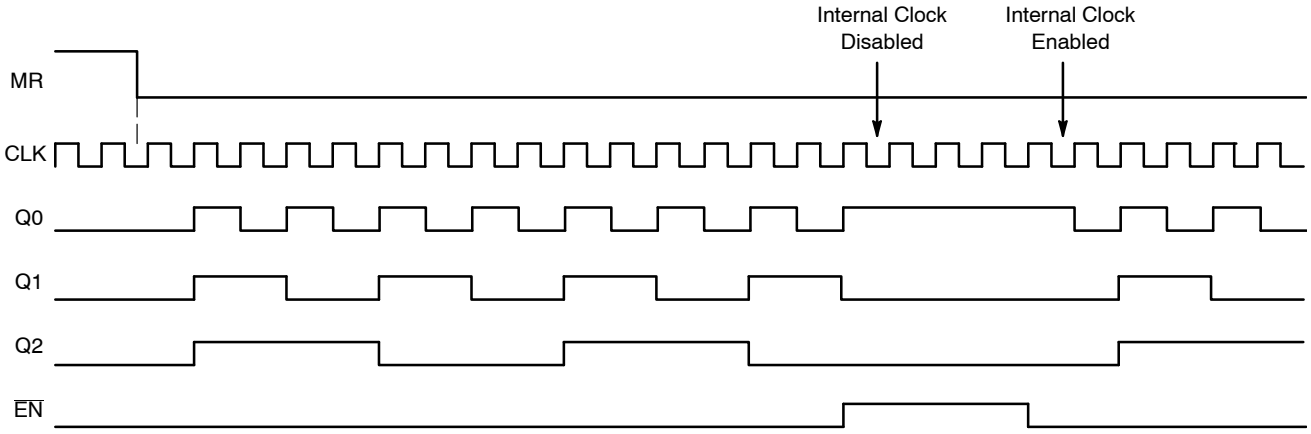

CASE 2: If the MR is De−asserted (H−L), After the Clock has Transitioned Low, the Outputs will Follow the Second Ensuing Clock Rising Edge.

Figure 2. Timing Diagrams

The $\overline{EN}$ signal will “freeze” the internal divider flip−flops on the first falling edge of CLK after its assertion. The internal divider flip−flops will maintain their state during the freeze. The $\overline{EN}$ is deasserted (LOW), and after the next falling edge of CLK, then the internal divider flip−flops will “unfreeze” and continue to their next state count with proper phase relationships.

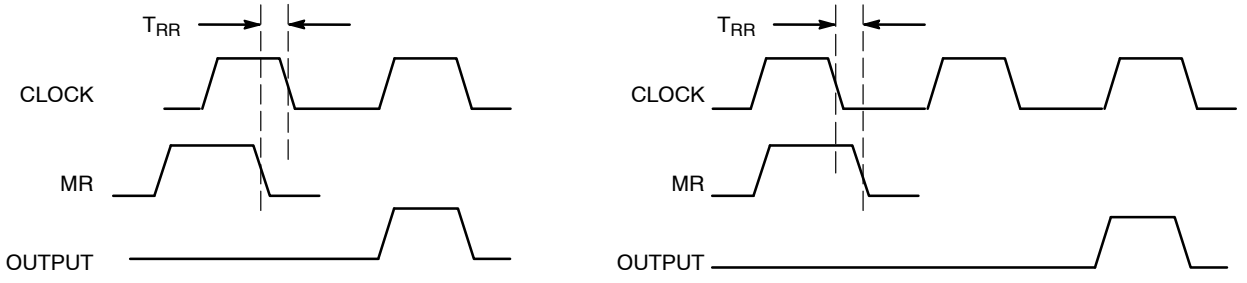

Figure 3. Reset Recovery Time

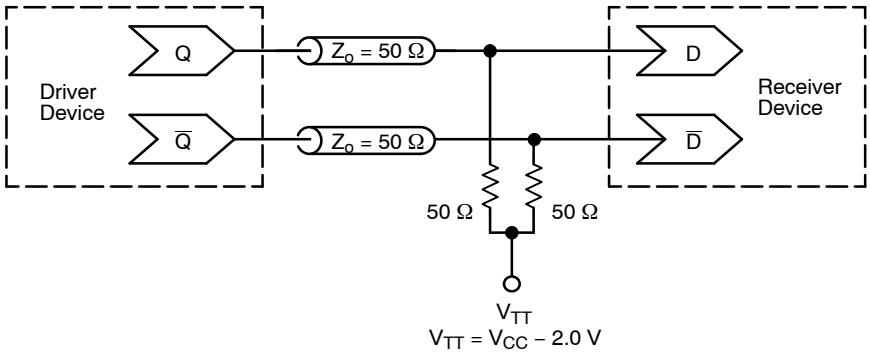

Figure 4. Typical Termination for Output Driver and Device Evaluation (See Application Note AND8020/D – Termination of ECL Logic Devices.)

Resource Reference of Application Notes

AN1405/D – ECL Clock Distribution Techniques

AN1406/D – Designing with PECL (ECL at +5.0 V)

AN1503/D – ECLinPS™ I/O SPiCE Modeling Kit

AN1504/D – Metastability and the ECLinPS Family

AN1568/D – Interfacing Between LVDS and ECL

AN1672/D – The ECL Translator Guide

AND8001/D – Odd Number Counters Design

AND8002/D – Marking and Date Codes

AND8020/D – Termination of ECL Logic Devices

AND8066/D – Interfacing with ECLinPS

AND8090/D – AC Characteristics of ECL Devices

ECLinPS is a trademark of Semiconductor Components Industries, LLC dba “**onsemi**” or its affiliates and/or subsidiaries in the United States and/or other countries.

MECHANICAL CASE OUTLINE
PACKAGE DIMENSIONS

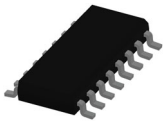

SOIC−16 9.90x3.90x1.50 1.27P
CASE 751B
ISSUE L

DATE 29 MAY 2024

NOTES:
1. DIMENSIONING AND TOLERANCING PER ASME Y14.5M, 2018.
2. DIMENSION IN MILLIMETERS. ANGLE IN DEGREES.
3. DIMENSIONS D AND E1 DO NOT INCLUDE MOLD PROTRUSION.
4. MAXIMUM MOLD PROTRUSION 0.15mm PER SIDE.
5. DIMENSION b DOES NOT INCLUDE DAMBAR PROTRUSION. ALLOWABLE DAMBAR PROTRUSION SHALL BE 0.127mm TOTAL IN EXCESS OF THE b DIMENSION AT MAXIMUM MATERIAL CONDITION.

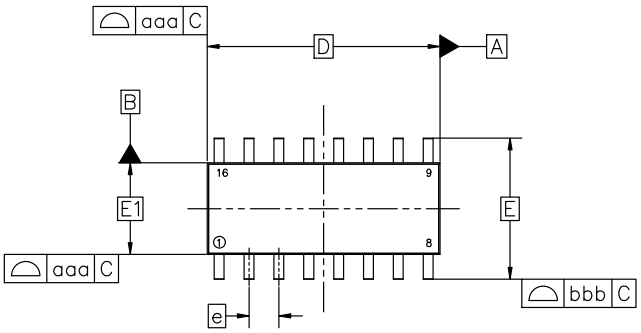

TOP VIEW

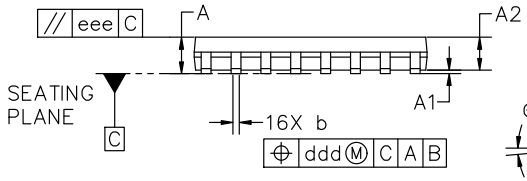

SIDE VIEW

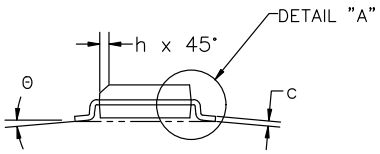

END VIEW

MILLIMETERS			
DIM	MIN	NOM	MAX
A	1.35	1.55	1.75
A1	0.00	0.05	0.10
A2	1.35	1.50	1.65
b	0.35	0.42	0.49
c	0.19	0.22	0.25
D	9.90 BSC		
E	6.00 BSC		
E1	3.90 BSC		
e	1.27 BSC		
h	0.25	−−−	0.50
L	0.40	0.83	1.25
L1	1.05 REF		
θ	0°	−−−	7°
TOLERANCE OF FORM AND POSITION			
aaa	0.10		
bbb	0.20		
ccc	0.10		
ddd	0.25		
eee	0.10		

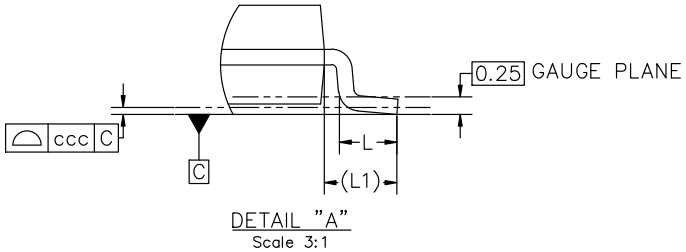

DETAIL "A"
Scale 3:1

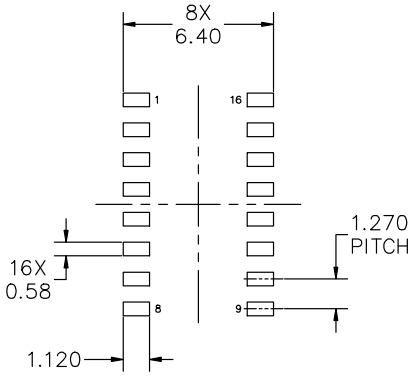

RECOMMENDED MOUNTING FOOTPRINT

*FOR ADDITIONAL INFORMATION ON OUR PB−FREE STRATEGY AND SOLDERING DETAILS, PLEASE DOWNLOAD THE onsemi SOLDERING AND MOUNTING TECHNIQUES REFERENCE MANUAL, SOLDERRM/D

DOCUMENT NUMBER:	98ASB42566B	Electronic versions are uncontrolled except when accessed directly from the Document Repository. Printed versions are uncontrolled except when stamped "CONTROLLED COPY" in red.
DESCRIPTION:	SOIC−16 9.90X3.90X1.50 1.27P	PAGE 1 OF 2

onsemi and onsemi are trademarks of Semiconductor Components Industries, LLC dba **onsemi** or its subsidiaries in the United States and/or other countries. **onsemi** reserves the right to make changes without further notice to any products herein. **onsemi** makes no warranty, representation or guarantee regarding the suitability of its products for any particular purpose, nor does **onsemi** assume any liability arising out of the application or use of any product or circuit, and specifically disclaims any and all liability, including without limitation special, consequential or incidental damages. **onsemi** does not convey any license under its patent rights nor the rights of others.

© Semiconductor Components Industries, LLC, 2019

SOIC−16 9.90x3.90x1.50 1.27P
CASE 751B
ISSUE L

DATE 29 MAY 2024

GENERIC
MARKING DIAGRAM*

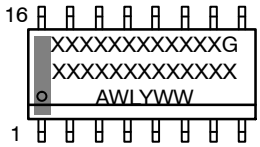

XXXXX = Specific Device Code
A = Assembly Location
WL = Wafer Lot
Y = Year
WW = Work Week
G = Pb−Free Package

*This information is generic. Please refer to device data sheet for actual part marking. Pb−Free indicator, "G" or microdot "▪", may or may not be present. Some products may not follow the Generic Marking.

STYLE 1:		STYLE 2:		STYLE 3:		STYLE 4:	
PIN 1.	COLLECTOR	PIN 1.	CATHODE	PIN 1.	COLLECTOR, DYE #1	PIN 1.	COLLECTOR, DYE #1
2.	BASE	2.	ANODE	2.	BASE, #1	2.	COLLECTOR, #1
3.	EMITTER	3.	NO CONNECTION	3.	EMITTER, #1	3.	COLLECTOR, #2
4.	NO CONNECTION	4.	CATHODE	4.	COLLECTOR, #1	4.	COLLECTOR, #2
5.	EMITTER	5.	CATHODE	5.	COLLECTOR, #2	5.	COLLECTOR, #3
6.	BASE	6.	NO CONNECTION	6.	BASE, #2	6.	COLLECTOR, #3
7.	COLLECTOR	7.	ANODE	7.	EMITTER, #2	7.	COLLECTOR, #4
8.	COLLECTOR	8.	CATHODE	8.	COLLECTOR, #2	8.	COLLECTOR, #4
9.	BASE	9.	CATHODE	9.	COLLECTOR, #3	9.	BASE, #4
10.	EMITTER	10.	ANODE	10.	BASE, #3	10.	EMITTER, #4
11.	NO CONNECTION	11.	NO CONNECTION	11.	EMITTER, #3	11.	BASE, #3
12.	EMITTER	12.	CATHODE	12.	COLLECTOR, #3	12.	EMITTER, #3
13.	BASE	13.	CATHODE	13.	COLLECTOR, #4	13.	BASE, #2
14.	COLLECTOR	14.	NO CONNECTION	14.	BASE, #4	14.	EMITTER, #2
15.	EMITTER	15.	ANODE	15.	EMITTER, #4	15.	BASE, #1
16.	COLLECTOR	16.	CATHODE	16.	COLLECTOR, #4	16.	EMITTER, #1

STYLE 5:		STYLE 6:		STYLE 7:	
PIN 1.	DRAIN, DYE #1	PIN 1.	CATHODE	PIN 1.	SOURCE N-CH
2.	DRAIN, #1	2.	CATHODE	2.	COMMON DRAIN (OUTPUT)
3.	DRAIN, #2	3.	CATHODE	3.	COMMON DRAIN (OUTPUT)
4.	DRAIN, #2	4.	CATHODE	4.	GATE P-CH
5.	DRAIN, #3	5.	CATHODE	5.	COMMON DRAIN (OUTPUT)
6.	DRAIN, #3	6.	CATHODE	6.	COMMON DRAIN (OUTPUT)
7.	DRAIN, #4	7.	CATHODE	7.	COMMON DRAIN (OUTPUT)
8.	DRAIN, #4	8.	CATHODE	8.	SOURCE P-CH
9.	GATE, #4	9.	ANODE	9.	SOURCE P-CH
10.	SOURCE, #4	10.	ANODE	10.	COMMON DRAIN (OUTPUT)
11.	GATE, #3	11.	ANODE	11.	COMMON DRAIN (OUTPUT)
12.	SOURCE, #3	12.	ANODE	12.	COMMON DRAIN (OUTPUT)
13.	GATE, #2	13.	ANODE	13.	GATE N-CH
14.	SOURCE, #2	14.	ANODE	14.	COMMON DRAIN (OUTPUT)
15.	GATE, #1	15.	ANODE	15.	COMMON DRAIN (OUTPUT)
16.	SOURCE, #1	16.	ANODE	16.	SOURCE N-CH

onsemi and onsemi are trademarks of Semiconductor Components Industries, LLC dba **onsemi** or its subsidiaries in the United States and/or other countries. **onsemi** reserves the right to make changes without further notice to any products herein. **onsemi** makes no warranty, representation or guarantee regarding the suitability of its products for any particular purpose, nor does **onsemi** assume any liability arising out of the application or use of any product or circuit, and specifically disclaims any and all liability, including without limitation special, consequential or incidental damages. **onsemi** does not convey any license under its patent rights nor the rights of others.

© Semiconductor Components Industries, LLC, 2019

onsemi, , and other names, marks, and brands are registered and/or common law trademarks of Semiconductor Components Industries, LLC dba "**onsemi**" or its affiliates and/or subsidiaries in the United States and/or other countries. **onsemi** owns the rights to a number of patents, trademarks, copyrights, trade secrets, and other intellectual property. A listing of **onsemi**'s product/patent coverage may be accessed at www.onsemi.com/site/pdf/Patent−Marking.pdf. **onsemi** reserves the right to make changes at any time to any products or information herein, without notice. The information herein is provided "as−is" and **onsemi** makes no warranty, representation or guarantee regarding the accuracy of the information, product features, availability, functionality, or suitability of its products for any particular purpose, nor does **onsemi** assume any liability arising out of the application or use of any product or circuit, and specifically disclaims any and all liability, including without limitation special, consequential or incidental damages. Buyer is responsible for its products and applications using **onsemi** products, including compliance with all laws, regulations and safety requirements or standards, regardless of any support or applications information provided by **onsemi**. "Typical" parameters which may be provided in **onsemi** data sheets and/or specifications can and do vary in different applications and actual performance may vary over time. All operating parameters, including "Typicals" must be validated for each customer application by customer's technical experts. **onsemi** does not convey any license under any of its intellectual property rights nor the rights of others. **onsemi** products are not designed, intended, or authorized for use as a critical component in life support systems or any FDA Class 3 medical devices or medical devices with a same or similar classification in a foreign jurisdiction or any devices intended for implantation in the human body. Should Buyer purchase or use **onsemi** products for any such unintended or unauthorized application, Buyer shall indemnify and hold **onsemi** and its officers, employees, subsidiaries, affiliates, and distributors harmless against all claims, costs, damages, and expenses, and reasonable attorney fees arising out of, directly or indirectly, any claim of personal injury or death associated with such unintended or unauthorized use, even if such claim alleges that **onsemi** was negligent regarding the design or manufacture of the part. **onsemi** is an Equal Opportunity/Affirmative Action Employer. This literature is subject to all applicable copyright laws and is not for resale in any manner.

ADDITIONAL INFORMATION

TECHNICAL PUBLICATIONS:
Technical Library: www.onsemi.com/design/resources/technical−documentation
onsemi Website: www.onsemi.com

ONLINE SUPPORT: www.onsemi.com/support
For additional information, please contact your local Sales Representative at www.onsemi.com/support/sales