MC100EL38

5 V ECL ÷2, ÷4/6 Clock Generation Chip

Description

The MC100EL38 is a low skew ÷2, ÷4/6 clock generation chip designed explicitly for low skew clock generation applications. The internal dividers are synchronous to each other, therefore, the common output edges are all precisely aligned. The device can be driven by either a differential or single-ended ECL or, if positive power supplies are used, PECL input signal.

The V_{BB} pin, an internally generated voltage supply, is available to this device only. For single-ended input conditions, the unused differential input is connected to V_{BB} as a switching reference voltage. V_{BB} may also rebias AC coupled inputs. When used, decouple V_{BB} and V_{CC} via a 0.01 μF capacitor and limit current sourcing or sinking to 0.5 mA. When not used, V_{BB} should be left open.

The common enable ($\overline{EN}$) is synchronous so that the internal dividers will only be enabled/disabled when the internal clock is already in the LOW state. This avoids any chance of generating a runt clock pulse on the internal clock when the device is enabled/disabled as can happen with an asynchronous control. An internal runt pulse could lead to losing synchronization between the internal divider stages. The internal enable flip-flop is clocked on the falling edge of the input clock, therefore, all associated specification limits are referenced to the negative edge of the clock input.

The Phase_Out output will go HIGH for one clock cycle whenever the ÷2 and the ÷4/6 outputs are both transitioning from a LOW to a HIGH. This output allows for clock synchronization within the system.

Upon startup, the internal flip-flops will attain a random state; therefore, for systems which utilize multiple EL38s, the master reset (MR) input must be asserted to ensure synchronization. For systems which only use one EL38, the MR pin need not be exercised as the internal divider design ensures synchronization between the ÷2 and the ÷4/6 outputs of a single device.

- 50 ps Output-to-Output Skew
- Synchronous Enable/Disable
- Master Reset for Synchronization
- ESD Protection:
  - 2 kV Human Body Model
  - 100 V Machine Model
- The 100 Series Contains Temperature Compensation
- PECL Mode Operating Range:
  - V_{CC} = 4.2 V to 5.7 V with V_{EE} = 0 V
- NECL Mode Operating Range:
  - V_{CC} = 0 V with V_{EE} = –4.2 V to –5.7 V
- Internal 75 kΩ Input Pulldown Resistors on CLK, $\overline{EN}$, MR, and DIVSEL
- Q Output will Default LOW with Inputs Open or at V_{EE}
- Meets or Exceeds JEDEC Spec EIA/JESD78 IC Latchup Test
- Moisture Sensitivity Level: 3 (Pb-Free)
  - For Additional Information, see Application Note AND8003/D
- Flammability Rating:
  - UL 94 V–0 @ 0.125 in, Oxygen Index: 28 to 34
- Transistor Count = 388 devices
- These Devices are Pb-Free, Halogen Free and are RoHS Compliant

ON Semiconductor®

www.onsemi.com

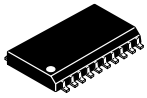

SOIC–20 WB
DW SUFFIX
CASE 751D–05

MARKING DIAGRAM*

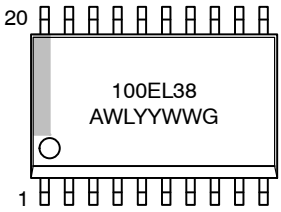

A	= Assembly Location
WL	= Wafer Lot
YY	= Year
WW	= Work Week
G	= Pb-Free Package

*For additional marking information, refer to Application Note AND8002/D.

ORDERING INFORMATION

Device	Package	Shipping†
MC100EL38DWR2G	SOIC–20 WB (Pb-Free)	1000/Tape & Reel

†For information on tape and reel specifications, including part orientation and tape sizes, please refer to our Tape and Reel Packaging Specifications Brochure, BRD8011/D.

© Semiconductor Components Industries, LLC, 2016

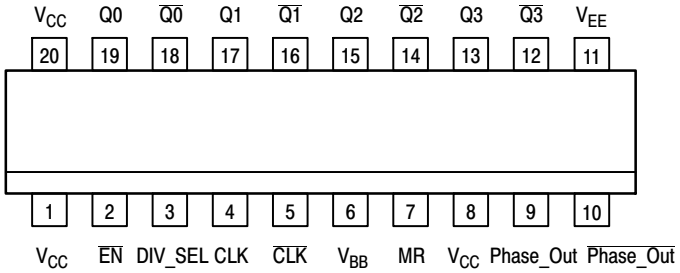

* All V_{CC} pins are tied together on the die.

Warning: All V_{CC} and V_{EE} pins must be externally connected to Power Supply to guarantee proper operation.

Figure 1. Pinout Assignment (Top View)

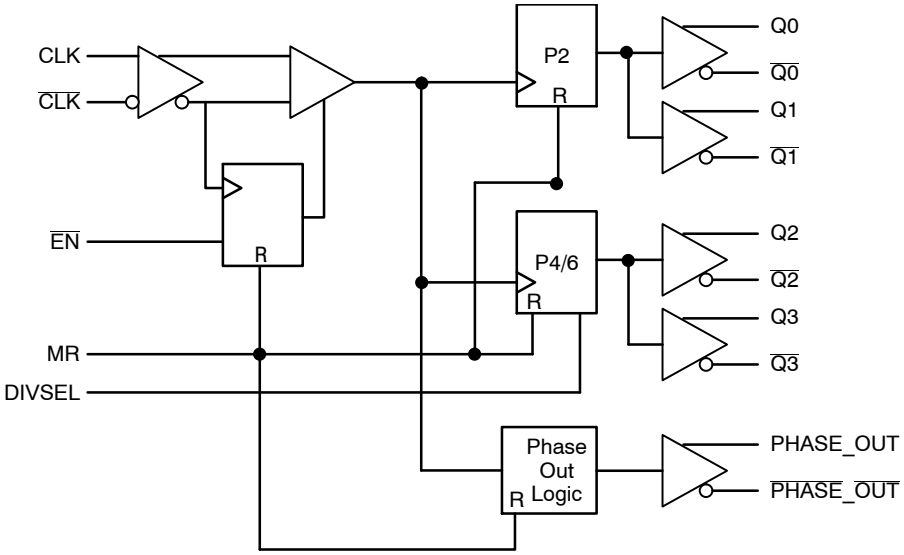

Figure 2. Logic Diagram

Table 1. PIN DESCRIPTION

Pin	Function
CLK, $\overline{CLK}$	ECL Diff Clock Inputs
Q_0, Q_1; $\overline{Q_0}$, $\overline{Q_1}$	ECL Diff ÷2 Outputs
Q_2, Q_3; $\overline{Q_2}$, $\overline{Q_3}$	ECL Diff ÷4/6 Outputs
$\overline{EN}$	ECL Sync Enable Input
MR	ECL Master Reset Input
DIVSEL	ECL Frequency Select Input
Phase_Out, $\overline{Phase_Out}$	ECL Phase Sync Diff. Signal Output
V_{BB}	Reference Voltage Output
V_{CC}	Positive Supply
V_{EE}	Negative Supply

Table 2. FUNCTION TABLE

CLK	$\overline{EN}$	MR	Function
Z	L	L	Divide
ZZ	H	L	Hold Q_{0-3}
X	X	H	Reset Q_{0-3}

Z = Low-to-High Transition
ZZ = High-to-Low Transition
X = Don't Care

DIVSEL	Q_2, Q_3 OUTPUTS
L	Divide by 4
H	Divide by 6

Table 3. MAXIMUM RATINGS

Symbol	Parameter	Condition 1	Condition 2	Rating	Unit
V_{CC}	PECL Mode Power Supply	V_{EE} = 0 V		8	V
V_{EE}	NECL Mode Power Supply	V_{CC} = 0 V		−8	V
V_I	PECL Mode Input Voltage NECL Mode Input Voltage	V_{EE} = 0 V V_{CC} = 0 V	$V_I \le V_{CC}$ $V_I \ge V_{EE}$	6 −6	V
I_{out}	Output Current	Continuous Surge		50 100	MA
I_{BB}	V_{BB} Sink/Source			± 0.5	mA
T_A	Operating Temperature Range			−40 to +85	°C
T_{stg}	Storage Temperature Range			−65 to +150	°C
θ_{JA}	Thermal Resistance (Junction-to-Ambient)	0 lfpm 500 lfpm	SOIC−20 WB	90 60	°C/W
θ_{JC}	Thermal Resistance (Junction-to-Case)	Standard Board	SOIC−20 WB	30 to 35	°C/W
T_{sol}	Wave Solder (Pb-Free)	<2 to 3 sec @ 260°C		265	°C

Stresses exceeding those listed in the Maximum Ratings table may damage the device. If any of these limits are exceeded, device functionality should not be assumed, damage may occur and reliability may be affected.

Table 4. 100EL SERIES PECL DC CHARACTERISTICS (V_{CC} = 5.0 V; V_{EE} = 0.0 V (Note 1))

		−40°C			25°C			85°C			
Symbol	Characteristic	Min	Typ	Max	Min	Typ	Max	Min	Typ	Max	Unit
I_{EE}	Power Supply Current		50	60		50	60		54	65	mA
V_{OH}	Output HIGH Voltage (Note 2)	3915	3995	4120	3975	4045	4120	3975	4050	4120	mV
V_{OL}	Output LOW Voltage (Note 2)	3170	3305	3445	3190	3295	3380	3190	3295	3380	mV
V_{IH}	Input HIGH Voltage (Single-Ended)	3835		4120	3835		4120	3835		4120	mV
V_{IL}	Input LOW Voltage (Single-Ended)	3190		3525	3190		3525	3190		3525	mV
V_{BB}	Output Voltage Reference	3.62		3.74	3.62		3.74	3.62		3.74	V
V_{IHCMR}	Input HIGH Voltage Common Mode Range (Differential) (Note 3)	1.65		4.45	1.65		4.45	1.65		4.45	V
I_{IH}	Input HIGH Current			150			150			150	μA
I_{IL}	Input LOW Current	0.5			0.5			0.5			μA

NOTE: Device will meet the specifications after thermal equilibrium has been established when mounted in a test socket or printed circuit board with maintained transverse airflow greater than 500 lfpm. Electrical parameters are guaranteed only over the declared operating temperature range. Functional operation of the device exceeding these conditions is not implied. Device specification limit values are applied individually under normal operating conditions and not valid simultaneously.

1. Input and output parameters vary 1:1 with V_{CC}. V_{EE} can vary +0.8 V / −0.5 V.
2. Outputs are terminated through a 50 Ω resistor to V_{CC} − 2.0 V.
3. V_{IHCMR} min varies 1:1 with V_{EE}, V_{IHCMR} max varies 1:1 with V_{CC}. The V_{IHCMR} range is referenced to the most positive side of the differential input signal. Normal operation is obtained if the HIGH level falls within the specified range and the peak-to-peak voltage lies between V_{PP}min and 1 V.

Table 5. 100EL SERIES NECL DC CHARACTERISTICS (V_{CC} = 0.0 V; V_{EE} = −5.0 V (Note 1))

Symbol	Characteristic	−40°C			25°C			85°C			Unit
		Min	Typ	Max	Min	Typ	Max	Min	Typ	Max	
I_{EE}	Power Supply Current		50	60		50	60		54	65	mA
V_{OH}	Output HIGH Voltage (Note 2)	−1085	−1005	−880	−1025	−955	−880	−1025	−955	−880	mV
V_{OL}	Output LOW Voltage (Note 2)	−1830	−1695	−1555	−1810	−1705	−1620	−1810	−1705	−1620	mV
V_{IH}	Input HIGH Voltage (Single-Ended)	−1165		−880	−1165		−880	−1165		−880	mV
V_{IL}	Input LOW Voltage (Single-Ended)	−1810		−1475	−1810		−1475	−1810		−1475	mV
V_{BB}	Output Voltage Reference	−1.38		−1.26	−1.38		−1.26	−1.38		−1.26	V
V_{IHCMR}	Input HIGH Voltage Common Mode Range (Differential) (Note 3)	−3.35		−0.55	−3.35		−0.55	−3.35		−0.55	V
I_{IH}	Input HIGH Current			150			150			150	μA
I_{IL}	Input LOW Current	0.5			0.5			0.5			μA

NOTE: Device will meet the specifications after thermal equilibrium has been established when mounted in a test socket or printed circuit board with maintained transverse airflow greater than 500 lfpm. Electrical parameters are guaranteed only over the declared operating temperature range. Functional operation of the device exceeding these conditions is not implied. Device specification limit values are applied individually under normal operating conditions and not valid simultaneously.

1. Input and output parameters vary 1:1 with V_{CC}. V_{EE} can vary +0.8 V / −0.5 V.
2. Outputs are terminated through a 50 Ω resistor to V_{CC} − 2.0 V.
3. V_{IHCMR} min varies 1:1 with V_{EE}, V_{IHCMR} max varies 1:1 with V_{CC}. The V_{IHCMR} range is referenced to the most positive side of the differential input signal. Normal operation is obtained if the HIGH level falls within the specified range and the peak-to-peak voltage lies between V_{PP}min and 1 V.

Table 6. AC CHARACTERISTICS (V_{CC} = 5.0 V; V_{EE} = 0.0 V or V_{CC} = 0.0 V; V_{EE} = −5.0 V (Note 1)

Symbol	Characteristic	−40°C			25°C			85°C			Unit
		Min	Typ	Max	Min	Typ	Max	Min	Typ	Max	
f_{max}	Maximum Toggle Frequency		TBD			TBD			TBD		GHz
t_{PLH} t_{PHL}	Propagation Delay to Output CLK → Q (Differential) CLK → Q (Single-Ended) CLK → Phase_Out (Differential) CLK → Phase_Out (Single-Ended) MR → Q	 810 710 800 750 510		 1010 1010 1000 1050 810	 850 750 840 790 540		 1050 1050 1040 1090 840	 900 800 890 840 570		 1100 1100 1090 1140 870	ps
t_{SKEW}	Within-Device Skew (Note 2) $Q_0 - Q_3$ All			 50 75			 50 75			 50 75	ps
t_{JITTER}	Cycle-to-Cycle Jitter		TBD			TBD			TBD		ps
	Part-to-Part $Q_0 - Q_3$ (Differential) All			 200 240			 200 240			 200 240	ps
t_S	Setup Time $\overline{EN} \rightarrow \overline{CLK}$ DIVSEL → CLK		150			150			150		ps
t_H	Hold Time $\overline{CLK} \rightarrow \overline{EN}$ CLK → Div_Sel		 150 200			 150 200			 150 200		ps
V_{PP}	Input Swing (Note 3)	150		1000	150		1000	150		1000	mV
t_{RR}	Reset Recovery Time			100			100			100	ps
t_{PW}	Minimum Pulse Width CLK MR	 800 700			 800 700			 800 700			ps
t_r, t_f	Output Rise/Fall Times Q (20% − 80%)	280		550	280		550	280		550	ps

NOTE: Device will meet the specifications after thermal equilibrium has been established when mounted in a test socket or printed circuit board with maintained transverse airflow greater than 500 lfpm. Electrical parameters are guaranteed only over the declared operating temperature range. Functional operation of the device exceeding these conditions is not implied. Device specification limit values are applied individually under normal operating conditions and not valid simultaneously.

1. V_{EE} can vary +0.8 V / −0.5 V.
2. Skew is measured between outputs under identical transitions.
3. $V_{PP(}$min) is minimum input swing for which AC parameters guaranteed. The device has a DC gain of ≈40.

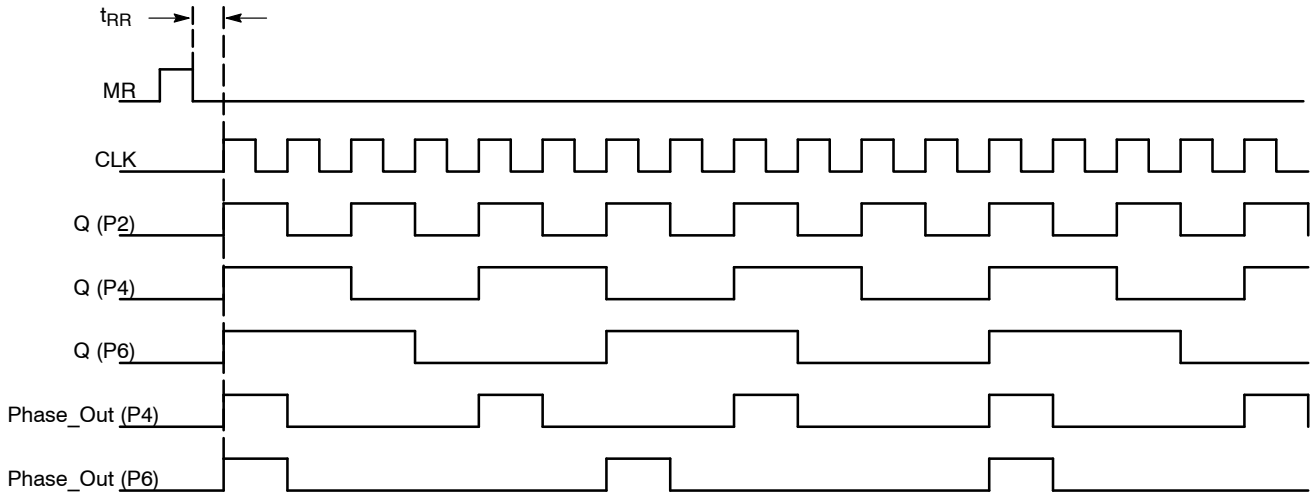

Figure 3. Timing Diagram

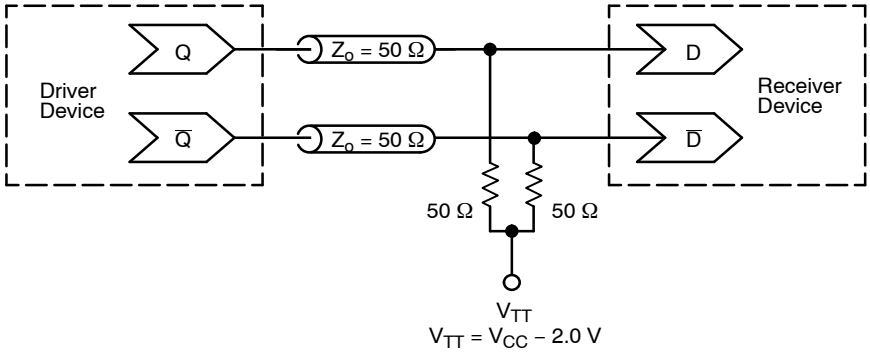

Figure 4. Typical Termination for Output Driver and Device Evaluation (See Application Note AND8020/D – Termination of ECL Logic Devices.)

Resource Reference of Application Notes

AN1405/D – ECL Clock Distribution Techniques
AN1406/D – Designing with PECL (ECL at +5.0 V)
AN1503/D – ECLinPS I/O SPiCE Modeling Kit
AN1504/D – Metastability and the ECLinPS Family
AN1568/D – Interfacing Between LVDS and ECL
AN1672/D – The ECL Translator Guide
AND8001/D – Odd Number Counters Design
AND8002/D – Marking and Date Codes
AND8020/D – Termination of ECL Logic Devices
AND8066/D – Interfacing with ECLinPS
AND8090/D – AC Characteristics of ECL Devices

ECLinPS is a registered trademark of Semiconductor Components Industries, LLC (SCILLC) or its subsidiaries in the United States and/or other countries.

MECHANICAL CASE OUTLINE
PACKAGE DIMENSIONS

SOIC−20 WB
CASE 751D−05
ISSUE H

DATE 22 APR 2015

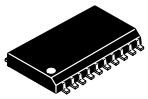

SCALE 1:1

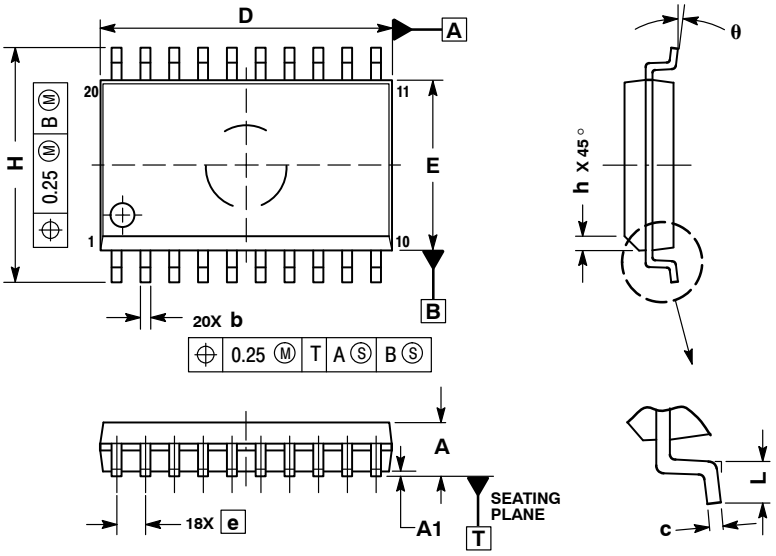

NOTES:
1. DIMENSIONS ARE IN MILLIMETERS.
2. INTERPRET DIMENSIONS AND TOLERANCES PER ASME Y14.5M, 1994.
3. DIMENSIONS D AND E DO NOT INCLUDE MOLD PROTRUSION.
4. MAXIMUM MOLD PROTRUSION 0.15 PER SIDE.
5. DIMENSION B DOES NOT INCLUDE DAMBAR PROTRUSION. ALLOWABLE PROTRUSION SHALL BE 0.13 TOTAL IN EXCESS OF B DIMENSION AT MAXIMUM MATERIAL CONDITION.

	MILLIMETERS	
DIM	MIN	MAX
A	2.35	2.65
A1	0.10	0.25
b	0.35	0.49
c	0.23	0.32
D	12.65	12.95
E	7.40	7.60
e	1.27 BSC	
H	10.05	10.55
h	0.25	0.75
L	0.50	0.90
θ	0°	7°

RECOMMENDED SOLDERING FOOTPRINT*

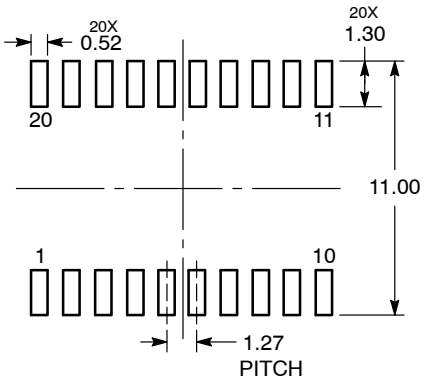

DIMENSIONS: MILLIMETERS

*For additional information on our Pb−Free strategy and soldering details, please download the ON Semiconductor Soldering and Mounting Techniques Reference Manual, SOLDERRM/D.

GENERIC MARKING DIAGRAM*

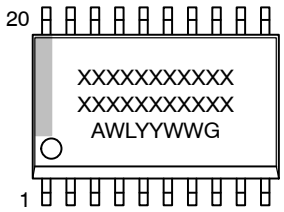

XXXXX = Specific Device Code
A = Assembly Location
WL = Wafer Lot
YY = Year
WW = Work Week
G = Pb−Free Package

*This information is generic. Please refer to device data sheet for actual part marking. Pb−Free indicator, “G” or microdot “▪”, may or may not be present. Some products may not follow the Generic Marking.

DOCUMENT NUMBER:	**98ASB42343B**	Electronic versions are uncontrolled except when accessed directly from the Document Repository. Printed versions are uncontrolled except when stamped “CONTROLLED COPY” in red.
DESCRIPTION:	**SOIC−20 WB**	**PAGE 1 OF 1**

onsemi and ONSEMI. are trademarks of Semiconductor Components Industries, LLC dba **onsemi** or its subsidiaries in the United States and/or other countries. **onsemi** reserves the right to make changes without further notice to any products herein. **onsemi** makes no warranty, representation or guarantee regarding the suitability of its products for any particular purpose, nor does **onsemi** assume any liability arising out of the application or use of any product or circuit, and specifically disclaims any and all liability, including without limitation special, consequential or incidental damages. **onsemi** does not convey any license under its patent rights nor the rights of others.

© Semiconductor Components Industries, LLC, 2019

onsemi, , and other names, marks, and brands are registered and/or common law trademarks of Semiconductor Components Industries, LLC dba "**onsemi**" or its affiliates and/or subsidiaries in the United States and/or other countries. **onsemi** owns the rights to a number of patents, trademarks, copyrights, trade secrets, and other intellectual property. A listing of **onsemi**'s product/patent coverage may be accessed at www.onsemi.com/site/pdf/Patent−Marking.pdf. **onsemi** reserves the right to make changes at any time to any products or information herein, without notice. The information herein is provided "as−is" and **onsemi** makes no warranty, representation or guarantee regarding the accuracy of the information, product features, availability, functionality, or suitability of its products for any particular purpose, nor does **onsemi** assume any liability arising out of the application or use of any product or circuit, and specifically disclaims any and all liability, including without limitation special, consequential or incidental damages. Buyer is responsible for its products and applications using **onsemi** products, including compliance with all laws, regulations and safety requirements or standards, regardless of any support or applications information provided by **onsemi**. "Typical" parameters which may be provided in **onsemi** data sheets and/or specifications can and do vary in different applications and actual performance may vary over time. All operating parameters, including "Typicals" must be validated for each customer application by customer's technical experts. **onsemi** does not convey any license under any of its intellectual property rights nor the rights of others. **onsemi** products are not designed, intended, or authorized for use as a critical component in life support systems or any FDA Class 3 medical devices or medical devices with a same or similar classification in a foreign jurisdiction or any devices intended for implantation in the human body. Should Buyer purchase or use **onsemi** products for any such unintended or unauthorized application, Buyer shall indemnify and hold **onsemi** and its officers, employees, subsidiaries, affiliates, and distributors harmless against all claims, costs, damages, and expenses, and reasonable attorney fees arising out of, directly or indirectly, any claim of personal injury or death associated with such unintended or unauthorized use, even if such claim alleges that **onsemi** was negligent regarding the design or manufacture of the part. **onsemi** is an Equal Opportunity/Affirmative Action Employer. This literature is subject to all applicable copyright laws and is not for resale in any manner.

ADDITIONAL INFORMATION

TECHNICAL PUBLICATIONS:
Technical Library: www.onsemi.com/design/resources/technical−documentation
onsemi Website: www.onsemi.com

ONLINE SUPPORT: www.onsemi.com/support
For additional information, please contact your local Sales Representative at www.onsemi.com/support/sales