5 V ECL Differential Clock D Flip-Flop

MC10EL51, MC100EL51

ON Semiconductor®

www.onsemi.com

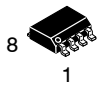

SOIC−8 NB
D SUFFIX
CASE 751−07

Description

The MC10EL/100EL51 is a differential clock D flip-flop with reset. The device is functionally similar to the E151 device with higher performance capabilities. With propagation delays and output transition times significantly faster than the E151 the EL51 is ideally suited for those applications which require the ultimate in AC performance.

The reset input is an asynchronous, level triggered signal. Data enters the master portion of the flip-flop when the clock is LOW and is transferred to the slave, and thus the outputs, upon a positive transition of the clock. The differential clock inputs of the EL51 allow the device to be used as a negative edge triggered flip-flop.

The differential input employs clamp circuitry to maintain stability under open input (pulled down to V_{EE}) conditions.

The 100 Series contains temperature compensation.

Features

- 475 ps Propagation Delay
- 2.8 GHz Toggle Frequency
- ESD Protection:
  - > 1 kV Human Body Model
  - > 100 V Machine Model
- PECL Mode Operating Range:
  - V_{CC} = 4.2 V to 5.7 V with V_{EE} = 0 V
- NECL Mode Operating Range:
  - V_{CC} = 0 V with V_{EE} = −4.2 V to −5.7 V
- Internal Input Pulldown Resistors on D, R, and CLK
- Meets or Exceeds JEDEC Spec EIA/JESD78 IC Latchup Test
- Moisture Sensitivity:
  - Level 1 for SOIC−8 NB
  - For Additional Information, see Application Note AND8003/D
- Flammability Rating:
  - UL 94 V−0 @ 0.125 in, Oxygen Index: 28 to 34
- Transistor Count = 73 devices
- These Devices are Pb-Free, Halogen Free and are RoHS Compliant

MARKING DIAGRAMS*

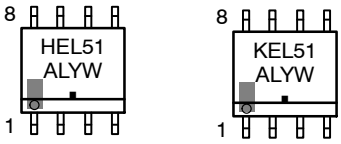

H = MC10
K = MC100
A = Assembly Location
L = Wafer Lot
Y = Year
W = Work Week
▪ = Pb-Free Package

(Note: Microdot may be in either location)

*For additional marking information, refer to Application Note AND8002/D.

ORDERING INFORMATION

Device	Package	Shipping
MC10EL51DG	SOIC−8 (Pb-Free)	98 Units/Tube
MC100EL51DG	SOIC−8 (Pb-Free)	98 Units/Tube

© Semiconductor Components Industries, LLC, 2016

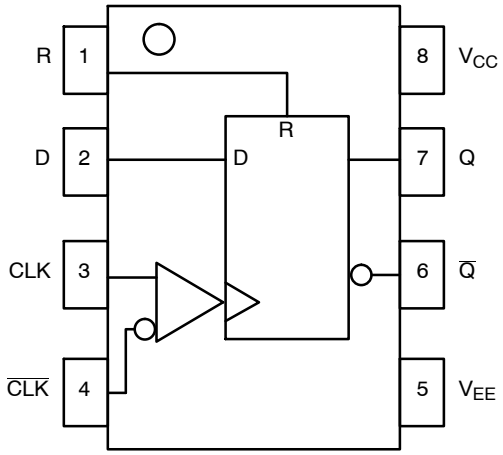

Figure 1. Logic Diagram and Pinout Assignment

Table 1. TRUTH TABLE

D*	R*	CLK*	Q**
L H X	L L H	Z Z X	L H L

Z = LOW to HIGH Transition
* Pin will default low when left open.
**Pin will default low when inputs are left open.

Table 2. PIN DESCRIPTION

PIN	FUNCTION
R	ECL Reset Input
D	ECL Data Input
CLK, $\overline{CLK}$	ECL Clock Inputs
Q, $\overline{Q}$	ECL Data Outputs
V_{CC}	Positive Supply
V_{EE}	Negative Supply

Table 3. MAXIMUM RATINGS

Symbol	Parameter	Condition 1	Condition 2	Rating	Unit
V_{CC}	PECL Mode Power Supply	V_{EE} = 0 V		8	V
V_{EE}	NECL Mode Power Supply	V_{CC} = 0 V		−8	V
V_I	PECL Mode Input Voltage NECL Mode Input Voltage	V_{EE} = 0 V V_{CC} = 0 V	$V_I \le V_{CC}$ $V_I \ge V_{EE}$	6 −6	V
I_{out}	Output Current	Continuous Surge		50 100	mA
T_A	Operating Temperature Range			−40 to +85	°C
T_{stg}	Storage Temperature Range			−65 to +150	°C
θ_{JA}	Thermal Resistance (Junction-to-Ambient)	0 lfpm 500 lfpm	SOIC−8 NB	190 130	°C/W
θ_{JC}	Thermal Resistance (Junction-to-Case)	Standard Board	SOIC−8 NB	41 to 44	°C/W
T_{sol}	Wave Solder (Pb-Free)	<2 to 3 sec @ 260°C		265	°C

Stresses exceeding those listed in the Maximum Ratings table may damage the device. If any of these limits are exceeded, device functionality should not be assumed, damage may occur and reliability may be affected.
1. JEDEC standard multilayer board − 2S2P (2 signal, 2 power)

Table 4. 10EL SERIES PECL DC CHARACTERISTICS (V_{CC} = 5.0 V; V_{EE} = 0 V (Note 1))

Symbol	Characteristic	−40°C			25°C			85°C			Unit
		Min	Typ	Max	Min	Typ	Max	Min	Typ	Max	
I_{EE}	Power Supply Current		24	29		24	29		24	29	mA
V_{OH}	Output HIGH Voltage (Note 2)	3920	4010	4110	4020	4105	4190	4090	4185	4280	mV
V_{OL}	Output LOW Voltage (Note 2)	3050	3200	3350	3050	3210	3370	3050	3227	3405	mV
V_{IH}	Input HIGH Voltage (Single-Ended)	3770		4110	3870		4190	3940		4280	mV
V_{IL}	Input LOW Voltage (Single-Ended)	3050		3500	3050		3520	3050		3555	mV
V_{IHCMR}	Input HIGH Voltage Common Mode Range (Differential Configuration) (Note 3)	2.5		4.6	2.5		4.6	2.5		4.6	V
I_{IH}	Input HIGH Current			150			150			150	μA
I_{IL}	Input LOW Current	0.5			0.5			0.3			μA

NOTE: Device will meet the specifications after thermal equilibrium has been established when mounted in a test socket or printed circuit board with maintained transverse airflow greater than 500 lfpm.

1. Input and output parameters vary 1:1 with V_{CC}. V_{EE} can vary +0.25 V / −0.5 V.
2. Outputs are terminated through a 50 Ω resistor to V_{CC} − 2.0 V.
3. V_{IHCMR} min varies 1:1 with V_{EE}, V_{IHCMR} max varies 1:1 with V_{CC}. The V_{IHCMR} range is referenced to the most positive side of the differential input signal. Normal operation is obtained if the HIGH level falls within the specified range and the peak-to-peak voltage lies between V_{PP}min and 1 V.

Table 5. 10EL SERIES NECL DC CHARACTERISTICS (V_{CC} = 0 V; V_{EE} = −5.0 V (Note 1))

Symbol	Characteristic	−40°C			25°C			85°C			Unit
		Min	Typ	Max	Min	Typ	Max	Min	Typ	Max	
I_{EE}	Power Supply Current		24	29		24	29		24	29	mA
V_{OH}	Output HIGH Voltage (Note 2)	−1080	−990	−890	−980	−895	−810	−910	−815	−720	mV
V_{OL}	Output LOW Voltage (Note 2)	−1950	−1800	−1650	−1950	−1790	−1630	−1950	−1773	−1595	mV
V_{IH}	Input HIGH Voltage (Single-Ended)	−1230		−890	−1130		−810	−1060		−720	mV
V_{IL}	Input LOW Voltage (Single-Ended)	−1950		−1500	−1950		−1480	−1950		−1445	mV
V_{IHCMR}	Input HIGH Voltage Common Mode Range (Differential Configuration) (Note 3)	−2.5		−0.4	−2.5		−0.4	−2.5		−0.4	V
I_{IH}	Input HIGH Current			150			150			150	μA
I_{IL}	Input LOW Current	0.5			0.5			0.3			μA

NOTE: Device will meet the specifications after thermal equilibrium has been established when mounted in a test socket or printed circuit board with maintained transverse airflow greater than 500 lfpm.

1. Input and output parameters vary 1:1 with V_{CC}. V_{EE} can vary +0.25 V / −0.5 V.
2. Outputs are terminated through a 50 Ω resistor to V_{CC} − 2.0 V.
3. V_{IHCMR} min varies 1:1 with V_{EE}, V_{IHCMR} max varies 1:1 with V_{CC}. The V_{IHCMR} range is referenced to the most positive side of the differential input signal. Normal operation is obtained if the HIGH level falls within the specified range and the peak-to-peak voltage lies between V_{PP}min and 1 V.

Table 6. 100EL SERIES PECL DC CHARACTERISTICS (V_{CC} = 5.0 V; V_{EE} = 0 V (Note 1))

Symbol	Characteristic	−40°C			25°C			85°C			Unit
		Min	Typ	Max	Min	Typ	Max	Min	Typ	Max	
I_{EE}	Power Supply Current		24	29		24	29		30	36	mA
V_{OH}	Output HIGH Voltage (Note 2)	3915	3995	4120	3975	4045	4120	3975	4050	4120	mV
V_{OL}	Output LOW Voltage (Note 2)	3170	3305	3445	3190	3295	3380	3190	3295	3380	mV
V_{IH}	Input HIGH Voltage (Single-Ended)	3835		4120	3835		4120	3835		4120	mV
V_{IL}	Input LOW Voltage (Single-Ended)	3190		3525	3190		3525	3190		3525	mV
V_{IHCMR}	Input HIGH Voltage Common Mode Range (Differential Configuration) (Note 3)	2.5		4.6	2.5		4.6	2.5		4.6	V
I_{IH}	Input HIGH Current			150			150			150	μA
I_{IL}	Input LOW Current	0.5			0.5			0.5			μA

NOTE: Device will meet the specifications after thermal equilibrium has been established when mounted in a test socket or printed circuit board with maintained transverse airflow greater than 500 lfpm.

1. Input and output parameters vary 1:1 with V_{CC}. V_{EE} can vary +0.8 V / −0.5 V.
2. Outputs are terminated through a 50 Ω resistor to V_{CC} − 2.0 V.
3. V_{IHCMR} min varies 1:1 with V_{EE}, V_{IHCMR} max varies 1:1 with V_{CC}. The V_{IHCMR} range is referenced to the most positive side of the differential input signal. Normal operation is obtained if the HIGH level falls within the specified range and the peak-to-peak voltage lies between V_{PP}min and 1 V.

Table 7. 100EL SERIES NECL DC CHARACTERISTICS (V_{CC} = 0 V; V_{EE} = −5.0 V (Note 1))

Symbol	Characteristic	−40°C			25°C			85°C			Unit
		Min	Typ	Max	Min	Typ	Max	Min	Typ	Max	
I_{EE}	Power Supply Current		24	29		24	29		30	36	mA
V_{OH}	Output HIGH Voltage (Note 2)	−1085	−1005	−880	−1025	−955	−880	−1025	−955	−880	mV
V_{OL}	Output LOW Voltage (Note 2)	−1830	−1695	−1555	−1810	−1705	−1620	−1810	−1705	−1620	mV
V_{IH}	Input HIGH Voltage (Single-Ended)	−1165		−880	−1165		−880	−1165		−880	mV
V_{IL}	Input LOW Voltage (Single-Ended)	−1810		−1475	−1810		−1475	−1810		−1475	mV
V_{IHCMR}	Input HIGH Voltage Common Mode Range (Differential Configuration) (Note 3)	−2.5		−0.4	−2.5		−0.4	−2.5		−0.4	V
I_{IH}	Input HIGH Current			150			150			150	μA
I_{IL}	Input LOW Current	0.5			0.5			0.5			μA

NOTE: Device will meet the specifications after thermal equilibrium has been established when mounted in a test socket or printed circuit board with maintained transverse airflow greater than 500 lfpm.

1. Input and output parameters vary 1:1 with V_{CC}. V_{EE} can vary +0.8 V / −0.5 V.
2. Outputs are terminated through a 50 Ω resistor to V_{CC} − 2.0 V.
3. V_{IHCMR} min varies 1:1 with V_{EE}, V_{IHCMR} max varies 1:1 with V_{CC}. The V_{IHCMR} range is referenced to the most positive side of the differential input signal. Normal operation is obtained if the HIGH level falls within the specified range and the peak-to-peak voltage lies between V_{PP}min and 1 V.

Table 8. AC CHARACTERISTICS (V_{CC}= 5.0 V; V_{EE}= 0.0 V or V_{CC}= 0.0 V; V_{EE}= −5.0 V (Note 1))

Symbol	Characteristic	−40°C			25°C			85°C			Unit
		Min	Typ	Max	Min	Typ	Max	Min	Typ	Max	
fmax	Maximum Toggle Frequency	1.8	2.8		2.2	2.8		2.2	2.8		GHz
t_{PLH} t_{PHL}	Propagation Delay to Output CLK R	 325 305	 465 455	 605 605	 385 355	 475 465	 565 565	 440 410	 530 510	 620 620	ps
t_S	Setup Time	150	0		150	0		150	0		ps
t_H	Hold Time	250	100		250	100		250	100		ps
t_{RR}	Reset Recovery	400	200		400	200		400	200		ps
t_{PW}	Minimum Pulse Width CLK, Reset	400			400			400			ps
V_{PP}	Input Swing (Note 2)	150		1000	150		1000	150		1000	mV
t_{JITTER}	Cycle-to-Cycle Jitter		TBD			TBD			TBD		ps
t_r t_f	Output Rise/Fall Times Q (20% − 80%)	100	225	350	100	225	350	100	225	350	ps

1. 10 Series: V_{EE} can vary +0.25 V / −0.5 V.
   100 Series: V_{EE} can vary +0.8 V / −0.5 V.
2. $V_{PP(}$min) is minimum input swing for which AC parameters guaranteed. The device has a DC gain of ≈40.

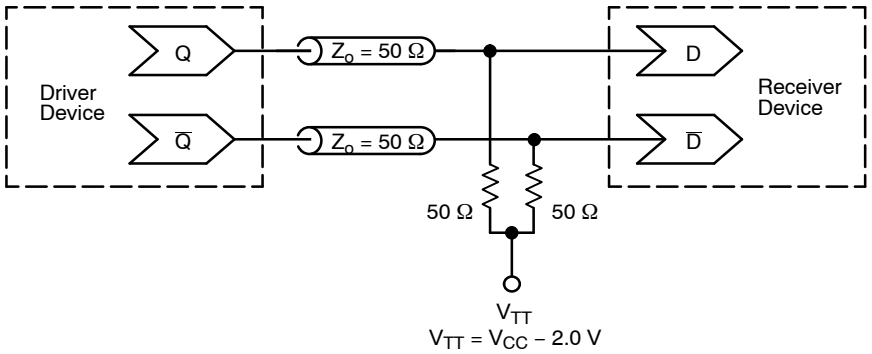

Figure 2. Typical Termination for Output Driver and Device Evaluation (See Application Note AND8020/D – Termination of ECL Logic Devices.)

Resource Reference of Application Notes

AN1405/D – ECL Clock Distribution Techniques

AN1406/D – Designing with PECL (ECL at +5.0 V)

AN1503/D – ECLinPS™ I/O SPiCE Modeling Kit

AN1504/D – Metastability and the ECLinPS Family

AN1568/D – Interfacing Between LVDS and ECL

AN1672/D – The ECL Translator Guide

AND8001/D – Odd Number Counters Design

AND8002/D – Marking and Date Codes

AND8020/D – Termination of ECL Logic Devices

AND8066/D – Interfacing with ECLinPS

AND8090/D – AC Characteristics of ECL Devices

ECLinPS is a trademark of Semiconductor Components Industries, LLC (SCILLC) or its subsidiaries in the United States and/or other countries.

MECHANICAL CASE OUTLINE
PACKAGE DIMENSIONS



SCALE 1:1

SOIC−8 NB
CASE 751−07
ISSUE AK

DATE 16 FEB 2011

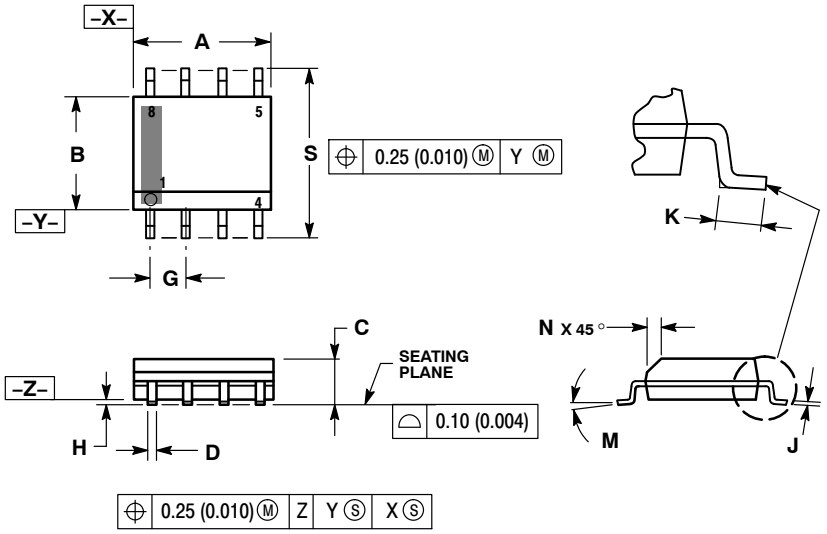

NOTES:
1. DIMENSIONING AND TOLERANCING PER ANSI Y14.5M, 1982.
2. CONTROLLING DIMENSION: MILLIMETER.
3. DIMENSION A AND B DO NOT INCLUDE MOLD PROTRUSION.
4. MAXIMUM MOLD PROTRUSION 0.15 (0.006) PER SIDE.
5. DIMENSION D DOES NOT INCLUDE DAMBAR PROTRUSION. ALLOWABLE DAMBAR PROTRUSION SHALL BE 0.127 (0.005) TOTAL IN EXCESS OF THE D DIMENSION AT MAXIMUM MATERIAL CONDITION.
6. 751−01 THRU 751−06 ARE OBSOLETE. NEW STANDARD IS 751−07.

	MILLIMETERS		INCHES	
DIM	MIN	MAX	MIN	MAX
A	4.80	5.00	0.189	0.197
B	3.80	4.00	0.150	0.157
C	1.35	1.75	0.053	0.069
D	0.33	0.51	0.013	0.020
G	1.27 BSC		0.050 BSC	
H	0.10	0.25	0.004	0.010
J	0.19	0.25	0.007	0.010
K	0.40	1.27	0.016	0.050
M	0 °	8 °	0 °	8 °
N	0.25	0.50	0.010	0.020
S	5.80	6.20	0.228	0.244

SOLDERING FOOTPRINT*

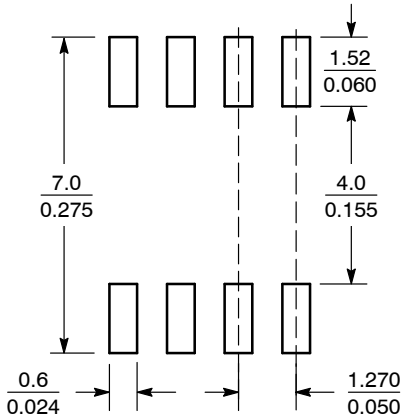

SCALE 6:1 (mm / inches)

*For additional information on our Pb−Free strategy and soldering details, please download the ON Semiconductor Soldering and Mounting Techniques Reference Manual, SOLDERRM/D.

GENERIC MARKING DIAGRAM*

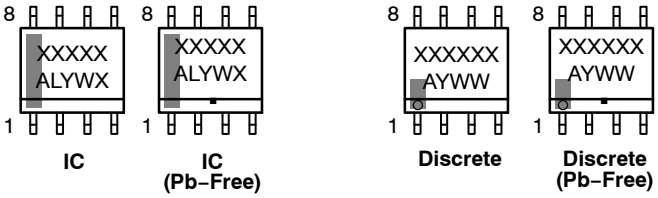

IC | IC (Pb−Free) | Discrete | Discrete (Pb−Free)

XXXXX = Specific Device Code
A = Assembly Location
L = Wafer Lot
Y = Year
W = Work Week
▪ = Pb−Free Package

XXXXXX = Specific Device Code
A = Assembly Location
Y = Year
WW = Work Week
▪ = Pb−Free Package

*This information is generic. Please refer to device data sheet for actual part marking. Pb−Free indicator, "G" or microdot "▪", may or may not be present. Some products may not follow the Generic Marking.

STYLES ON PAGE 2

DOCUMENT NUMBER:	**98ASB42564B**	Electronic versions are uncontrolled except when accessed directly from the Document Repository. Printed versions are uncontrolled except when stamped "CONTROLLED COPY" in red.
DESCRIPTION:	**SOIC−8 NB**	**PAGE 1 OF 2**

onsemi and onsemi are trademarks of Semiconductor Components Industries, LLC dba **onsemi** or its subsidiaries in the United States and/or other countries. **onsemi** reserves the right to make changes without further notice to any products herein. **onsemi** makes no warranty, representation or guarantee regarding the suitability of its products for any particular purpose, nor does **onsemi** assume any liability arising out of the application or use of any product or circuit, and specifically disclaims any and all liability, including without limitation special, consequential or incidental damages. **onsemi** does not convey any license under its patent rights nor the rights of others.

© Semiconductor Components Industries, LLC, 2019

SOIC−8 NB
CASE 751−07
ISSUE AK

DATE 16 FEB 2011

STYLE 1:
PIN 1. EMITTER
2. COLLECTOR
3. COLLECTOR
4. EMITTER
5. EMITTER
6. BASE
7. BASE
8. EMITTER

STYLE 2:
PIN 1. COLLECTOR, DIE, #1
2. COLLECTOR, #1
3. COLLECTOR, #2
4. COLLECTOR, #2
5. BASE, #2
6. EMITTER, #2
7. BASE, #1
8. EMITTER, #1

STYLE 3:
PIN 1. DRAIN, DIE #1
2. DRAIN, #1
3. DRAIN, #2
4. DRAIN, #2
5. GATE, #2
6. SOURCE, #2
7. GATE, #1
8. SOURCE, #1

STYLE 4:
PIN 1. ANODE
2. ANODE
3. ANODE
4. ANODE
5. ANODE
6. ANODE
7. ANODE
8. COMMON CATHODE

STYLE 5:
PIN 1. DRAIN
2. DRAIN
3. DRAIN
4. DRAIN
5. GATE
6. GATE
7. SOURCE
8. SOURCE

STYLE 6:
PIN 1. SOURCE
2. DRAIN
3. DRAIN
4. SOURCE
5. SOURCE
6. GATE
7. GATE
8. SOURCE

STYLE 7:
PIN 1. INPUT
2. EXTERNAL BYPASS
3. THIRD STAGE SOURCE
4. GROUND
5. DRAIN
6. GATE 3
7. SECOND STAGE Vd
8. FIRST STAGE Vd

STYLE 8:
PIN 1. COLLECTOR, DIE #1
2. BASE, #1
3. BASE, #2
4. COLLECTOR, #2
5. COLLECTOR, #2
6. EMITTER, #2
7. EMITTER, #1
8. COLLECTOR, #1

STYLE 9:
PIN 1. EMITTER, COMMON
2. COLLECTOR, DIE #1
3. COLLECTOR, DIE #2
4. EMITTER, COMMON
5. EMITTER, COMMON
6. BASE, DIE #2
7. BASE, DIE #1
8. EMITTER, COMMON

STYLE 10:
PIN 1. GROUND
2. BIAS 1
3. OUTPUT
4. GROUND
5. GROUND
6. BIAS 2
7. INPUT
8. GROUND

STYLE 11:
PIN 1. SOURCE 1
2. GATE 1
3. SOURCE 2
4. GATE 2
5. DRAIN 2
6. DRAIN 2
7. DRAIN 1
8. DRAIN 1

STYLE 12:
PIN 1. SOURCE
2. SOURCE
3. SOURCE
4. GATE
5. DRAIN
6. DRAIN
7. DRAIN
8. DRAIN

STYLE 13:
PIN 1. N.C.
2. SOURCE
3. SOURCE
4. GATE
5. DRAIN
6. DRAIN
7. DRAIN
8. DRAIN

STYLE 14:
PIN 1. N−SOURCE
2. N−GATE
3. P−SOURCE
4. P−GATE
5. P−DRAIN
6. P−DRAIN
7. N−DRAIN
8. N−DRAIN

STYLE 15:
PIN 1. ANODE 1
2. ANODE 1
3. ANODE 1
4. ANODE 1
5. CATHODE, COMMON
6. CATHODE, COMMON
7. CATHODE, COMMON
8. CATHODE, COMMON

STYLE 16:
PIN 1. EMITTER, DIE #1
2. BASE, DIE #1
3. EMITTER, DIE #2
4. BASE, DIE #2
5. COLLECTOR, DIE #2
6. COLLECTOR, DIE #2
7. COLLECTOR, DIE #1
8. COLLECTOR, DIE #1

STYLE 17:
PIN 1. VCC
2. V2OUT
3. V1OUT
4. TXE
5. RXE
6. VEE
7. GND
8. ACC

STYLE 18:
PIN 1. ANODE
2. ANODE
3. SOURCE
4. GATE
5. DRAIN
6. DRAIN
7. CATHODE
8. CATHODE

STYLE 19:
PIN 1. SOURCE 1
2. GATE 1
3. SOURCE 2
4. GATE 2
5. DRAIN 2
6. MIRROR 2
7. DRAIN 1
8. MIRROR 1

STYLE 20:
PIN 1. SOURCE (N)
2. GATE (N)
3. SOURCE (P)
4. GATE (P)
5. DRAIN
6. DRAIN
7. DRAIN
8. DRAIN

STYLE 21:
PIN 1. CATHODE 1
2. CATHODE 2
3. CATHODE 3
4. CATHODE 4
5. CATHODE 5
6. COMMON ANODE
7. COMMON ANODE
8. CATHODE 6

STYLE 22:
PIN 1. I/O LINE 1
2. COMMON CATHODE/VCC
3. COMMON CATHODE/VCC
4. I/O LINE 3
5. COMMON ANODE/GND
6. I/O LINE 4
7. I/O LINE 5
8. COMMON ANODE/GND

STYLE 23:
PIN 1. LINE 1 IN
2. COMMON ANODE/GND
3. COMMON ANODE/GND
4. LINE 2 IN
5. LINE 2 OUT
6. COMMON ANODE/GND
7. COMMON ANODE/GND
8. LINE 1 OUT

STYLE 24:
PIN 1. BASE
2. EMITTER
3. COLLECTOR/ANODE
4. COLLECTOR/ANODE
5. CATHODE
6. CATHODE
7. COLLECTOR/ANODE
8. COLLECTOR/ANODE

STYLE 25:
PIN 1. VIN
2. N/C
3. REXT
4. GND
5. IOUT
6. IOUT
7. IOUT
8. IOUT

STYLE 26:
PIN 1. GND
2. dv/dt
3. ENABLE
4. ILIMIT
5. SOURCE
6. SOURCE
7. SOURCE
8. VCC

STYLE 27:
PIN 1. ILIMIT
2. OVLO
3. UVLO
4. INPUT+
5. SOURCE
6. SOURCE
7. SOURCE
8. DRAIN

STYLE 28:
PIN 1. SW_TO_GND
2. DASIC_OFF
3. DASIC_SW_DET
4. GND
5. V_MON
6. VBULK
7. VBULK
8. VIN

STYLE 29:
PIN 1. BASE, DIE #1
2. EMITTER, #1
3. BASE, #2
4. EMITTER, #2
5. COLLECTOR, #2
6. COLLECTOR, #2
7. COLLECTOR, #1
8. COLLECTOR, #1

STYLE 30:
PIN 1. DRAIN 1
2. DRAIN 1
3. GATE 2
4. SOURCE 2
5. SOURCE 1/DRAIN 2
6. SOURCE 1/DRAIN 2
7. SOURCE 1/DRAIN 2
8. GATE 1

DOCUMENT NUMBER:	**98ASB42564B**	Electronic versions are uncontrolled except when accessed directly from the Document Repository. Printed versions are uncontrolled except when stamped "CONTROLLED COPY" in red.	
DESCRIPTION:	**SOIC−8 NB**		**PAGE 2 OF 2**

onsemi and ONSEMI. are trademarks of Semiconductor Components Industries, LLC dba **onsemi** or its subsidiaries in the United States and/or other countries. **onsemi** reserves the right to make changes without further notice to any products herein. **onsemi** makes no warranty, representation or guarantee regarding the suitability of its products for any particular purpose, nor does **onsemi** assume any liability arising out of the application or use of any product or circuit, and specifically disclaims any and all liability, including without limitation special, consequential or incidental damages. **onsemi** does not convey any license under its patent rights nor the rights of others.

© Semiconductor Components Industries, LLC, 2019

onsemi, , and other names, marks, and brands are registered and/or common law trademarks of Semiconductor Components Industries, LLC dba "**onsemi**" or its affiliates and/or subsidiaries in the United States and/or other countries. **onsemi** owns the rights to a number of patents, trademarks, copyrights, trade secrets, and other intellectual property. A listing of **onsemi**'s product/patent coverage may be accessed at www.onsemi.com/site/pdf/Patent−Marking.pdf. **onsemi** reserves the right to make changes at any time to any products or information herein, without notice. The information herein is provided "as−is" and **onsemi** makes no warranty, representation or guarantee regarding the accuracy of the information, product features, availability, functionality, or suitability of its products for any particular purpose, nor does **onsemi** assume any liability arising out of the application or use of any product or circuit, and specifically disclaims any and all liability, including without limitation special, consequential or incidental damages. Buyer is responsible for its products and applications using **onsemi** products, including compliance with all laws, regulations and safety requirements or standards, regardless of any support or applications information provided by **onsemi**. "Typical" parameters which may be provided in **onsemi** data sheets and/or specifications can and do vary in different applications and actual performance may vary over time. All operating parameters, including "Typicals" must be validated for each customer application by customer's technical experts. **onsemi** does not convey any license under any of its intellectual property rights nor the rights of others. **onsemi** products are not designed, intended, or authorized for use as a critical component in life support systems or any FDA Class 3 medical devices or medical devices with a same or similar classification in a foreign jurisdiction or any devices intended for implantation in the human body. Should Buyer purchase or use **onsemi** products for any such unintended or unauthorized application, Buyer shall indemnify and hold **onsemi** and its officers, employees, subsidiaries, affiliates, and distributors harmless against all claims, costs, damages, and expenses, and reasonable attorney fees arising out of, directly or indirectly, any claim of personal injury or death associated with such unintended or unauthorized use, even if such claim alleges that **onsemi** was negligent regarding the design or manufacture of the part. **onsemi** is an Equal Opportunity/Affirmative Action Employer. This literature is subject to all applicable copyright laws and is not for resale in any manner.

ADDITIONAL INFORMATION

TECHNICAL PUBLICATIONS:
Technical Library: www.onsemi.com/design/resources/technical−documentation
onsemi Website: www.onsemi.com

ONLINE SUPPORT: www.onsemi.com/support
For additional information, please contact your local Sales Representative at www.onsemi.com/support/sales