MC100EL56

5V ECL Dual Differential 2:1 Multiplexer

ON Semiconductor®

http://onsemi.com

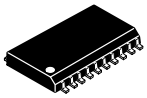

SO−20 WB
DW SUFFIX
CASE 751D

Description

The MC100EL56 is a dual, fully differential 2:1 multiplexer. The differential data path makes the device ideal for multiplexing low skew clock or other skew sensitive signals. Multiple V_{BB} pins are provided to ease AC coupling input signals.

The V_{BB} pins, an internally generated voltage supply, are available to this device only. For single-ended input conditions, the unused differential input is connected to V_{BB} as a switching reference voltage. V_{BB} may also rebias AC coupled inputs. When used, decouple V_{BB} and V_{CC} via a 0.01 μF capacitor and limit current sourcing or sinking to 0.5 mA. When not used, V_{BB} should be left open.

The device features both individual and common select inputs to address both data path and random logic applications.

The differential inputs have special circuitry which ensures device stability under open input conditions. When both differential inputs are left open, the D input will pull down to V_{EE}. The $\overline{D}$ input will bias around $V_{CC}/2$ forcing the Q output LOW.

Features

- 580 ps Typical Propagation Delays
- Separate and Common Select
- The 100 Series Contains Temperature Compensation
- PECL Mode Operating Range:
  V_{CC} = 4.2 V to 5.7 V with V_{EE} = 0 V
- NECL Mode Operating Range:
  V_{CC} = 0 V with V_{EE} = −4.2 V to −5.7 V
- Internal Input Pulldown Resistors on D(s), SEL(s), and COM_SEL
- Q Output will Default LOW with Inputs Open or at V_{EE}
- Pb−Free Packages are Available*

MARKING DIAGRAM*

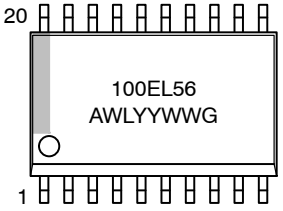

A	= Assembly Location
WL	= Wafer Lot
YY	= Year
WW	= Work Week
G	= Pb−Free Package

*For additional marking information, refer to Application Note AND8002/D.

ORDERING INFORMATION

See detailed ordering and shipping information in the package dimensions section on page 5 of this data sheet.

*For additional information on our Pb−Free strategy and soldering details, please download the ON Semiconductor Soldering and Mounting Techniques Reference Manual, SOLDERRM/D.

© Semiconductor Components Industries, LLC, 2008

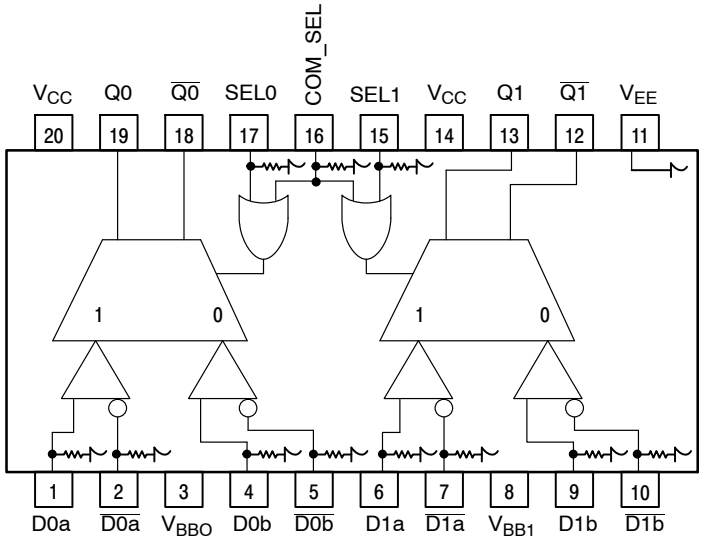

Warning: All V_{CC} and V_{EE} pins must be externally connected to Power Supply to guarantee proper operation.

Figure 1. 20−Lead Package (Top View) **and Logic Diagram**

Table 1. PIN DESCRIPTION

PIN	FUNCTION
D0a* – D1a*	ECL Input Data a
$\overline{D0a}$* – $\overline{D1a}$*	ECL Input Data a Invert
D0b* – D1b*	ECL Input Data b
$\overline{D0b}$* – $\overline{D1b}$*	ECL Input Data b Invert
SEL0* – SEL1*	ECL Indiv. Select Input
COM_SEL*	ECL Common Select Input
V_{BB0}, V_{BB1}	Output Reference Voltage
Q0 – Q1	ECL True Outputs
$\overline{Q0}$ – $\overline{Q1}$	ECL Inverted Outputs
V_{CC}	Positive Supply
V_{EE}	Negative Supply

* Pins will default LOW when left open.

Table 2. TRUTH TABLE

SEL0	SEL1	COM_SEL	Q0, $\overline{Q0}$	Q1, $\overline{Q1}$
X	X	H	a	a
L	L	L	b	b
L	H	L	b	a
H	H	L	a	a
H	L	L	a	b

Table 3. ATTRIBUTES

Characteristics		Value
Internal Input Pulldown Resistor		75 kΩ
Internal Input Pullup Resistor		N/A
ESD Protection	Human Body Model Machine Model Charge Device Model	> 2 kV > 200 V > 4 kV
Moisture Sensitivity (Note 1) Pb (Indefinite Time Out of Drypack) Pb−Free		 Level 1 Level 3
Flammability Rating	Oxygen Index: 28 to 34	UL 94 V−0 @ 0.125 in
Transistor Count		147
Meets or Exceeds JEDEC Spec EIA/JESD78 IC Latchup Test		

1. Refer to Application Note AND8003/D for additional information.

Table 4. MAXIMUM RATINGS

Symbol	Parameter	Condition 1	Condition 2	Rating	Unit
V_{CC}	PECL Mode Power Supply	V_{EE} = 0 V		8	V
V_{EE}	NECL Mode Power Supply	V_{CC} = 0 V		−8	V
V_I	PECL Mode Input Voltage NECL Mode Input Voltage	V_{EE} = 0 V V_{CC} = 0 V	$V_I \le V_{CC}$ $V_I \ge V_{EE}$	6 −6	V V
I_{out}	Output Current	Continuous Surge		50 100	mA mA
I_{BB}	V_{BB} Sink/Source			± 0.5	mA
T_A	Operating Temperature Range			−40 to +85	°C
T_{stg}	Storage Temperature Range			−65 to +150	°C
θ_{JA}	Thermal Resistance (Junction−to−Ambient)	0 lfpm 500 lfpm	SO−20 WB SO−20 WB	90 60	°C/W °C/W
θ_{JC}	Thermal Resistance (Junction−to−Case)	Standard Board	SO−20 WB	30 to 35	°C/W
T_{sol}	Wave Solder Pb Pb−Free	<2 to 3 sec @ 248°C <2 to 3 sec @ 260°C		265 265	°C

Stresses exceeding Maximum Ratings may damage the device. Maximum Ratings are stress ratings only. Functional operation above the Recommended Operating Conditions is not implied. Extended exposure to stresses above the Recommended Operating Conditions may affect device reliability.

Table 5. 100EL SERIES PECL DC CHARACTERISTICS V_{CC} = 5.0 V; V_{EE} = 0.0 V (Note 2)

		−40°C			25°C			85°C			
Symbol	Characteristic	Min	Typ	Max	Min	Typ	Max	Min	Typ	Max	Unit
I_{EE}	Power Supply Current		20	24		20	24		20	24	mA
V_{OH}	Output HIGH Voltage (Note 3)	3915	3995	4120	3975	4045	4120	3975	4050	4120	mV
V_{OL}	Output LOW Voltage (Note 3)	3170	3305	3445	3190	3295	3380	3190	3295	3380	mV
V_{IH}	Input HIGH Voltage (Single−Ended)	3835		4120	3835		4120	3835		4120	mV
V_{IL}	Input LOW Voltage (Single−Ended)	3190		3525	3190		3525	3190		3525	mV
V_{BB}	Output Voltage Reference	3.62		3.74	3.62		3.74	3.62		3.74	V
V_{IHCMR}	Common Mode Range (Differential Configuration) (Note 4) V_{PP} < 500 mV V_{PP} ≥ 500 mV	 1.3 1.5		 4.6 4.6	 1.2 1.4		 4.6 4.6	 1.2 1.4		 4.6 4.6	V
I_{IH}	Input HIGH Current			150			150			150	μA
I_{IL}	Input LOW Current	0.5			0.5			0.5			μA

NOTE: Device will meet the specifications after thermal equilibrium has been established when mounted in a test socket or printed circuit board with maintained transverse airflow greater than 500 lfpm. Electrical parameters are guaranteed only over the declared operating temperature range. Functional operation of the device exceeding these conditions is not implied. Device specification limit values are applied individually under normal operating conditions and not valid simultaneously.

2. Input and output parameters vary 1:1 with V_{CC}. V_{EE} can vary +0.8 V / −0.5 V.
3. Outputs are terminated through a 50 Ω resistor to V_{CC} − 2.0 V.
4. V_{IHCMR} min varies 1:1 with V_{EE}, V_{IHCMR} max varies 1:1 with V_{CC}. The V_{IHCMR} range is referenced to the most positive side of the differential input signal. Normal operation is obtained if the HIGH level falls within the specified range and the peak-to-peak voltage lies between V_{PP}min and 1 V.

Table 6. 100EL SERIES NECL DC CHARACTERISTICS V_{CC} = 0.0 V; V_{EE} = −5.0 V (Note 5)

Symbol	Characteristic	−40°C			25°C			85°C			Unit
		Min	Typ	Max	Min	Typ	Max	Min	Typ	Max	
I_{EE}	Power Supply Current		20	24		20	24		20	24	mA
V_{OH}	Output HIGH Voltage (Note 6)	−1085	−1005	−880	−1025	−955	−880	−1025	−955	−880	mV
V_{OL}	Output LOW Voltage (Note 6)	−1830	−1695	−1555	−1810	−1705	−1620	−1810	−1705	−1620	mV
V_{IH}	Input HIGH Voltage (Single−Ended)	−1165		−880	−1165		−880	−1165		−880	mV
V_{IL}	Input LOW Voltage (Single−Ended)	−1810		−1475	−1810		−1475	−1810		−1475	mV
V_{BB}	Output Voltage Reference	−1.38		−1.26	−1.38		−1.26	−1.38		−1.26	V
V_{IHCMR}	Common Mode Range (Differential Configuration) (Note 7) V_{PP} < 500 mV V_{PP} ≥ 500 mV	 −3.7 −3.5		 −0.4 −0.4	 −3.8 −3.6		 −0.4 −0.4	 −3.8 −3.6		 −0.4 −0.4	V
I_{IH}	Input HIGH Current			150			150			150	μA
I_{IL}	Input LOW Current	0.5			0.5			0.5			μA

NOTE: Device will meet the specifications after thermal equilibrium has been established when mounted in a test socket or printed circuit board with maintained transverse airflow greater than 500 lfpm. Electrical parameters are guaranteed only over the declared operating temperature range. Functional operation of the device exceeding these conditions is not implied. Device specification limit values are applied individually under normal operating conditions and not valid simultaneously.

5. Input and output parameters vary 1:1 with V_{CC}. V_{EE} can vary +0.8 V / −0.5 V.
6. Outputs are terminated through a 50 Ω resistor to V_{CC} − 2.0 V.
7. V_{IHCMR} min varies 1:1 with V_{EE}, V_{IHCMR} max varies 1:1 with V_{CC}. The V_{IHCMR} range is referenced to the most positive side of the differential input signal. Normal operation is obtained if the HIGH level falls within the specified range and the peak-to-peak voltage lies between V_{PP}min and 1 V.

Table 7. AC CHARACTERISTICS V_{CC} = 5.0 V; V_{EE} = 0.0 V or V_{CC} = 0.0 V; V_{EE} = −5.0 V (Note 8)

Symbol	Characteristic	−40°C			25°C			85°C			Unit
		Min	Typ	Max	Min	Typ	Max	Min	Typ	Max	
f_{max}	Maximum Toggle Frequency					1					GHz
t_{PLH} t_{PHL}	Propagation Delay to Output D SEL COMSEL	400 430 430		600 730 730	420 440 440		620 740 740	440 450 450		640 750 750	ps
t_{SKEW}	Within−Device Skew (Note 9)		40	80		40	80		40	80	ps
t_{SKEW}	Duty Cycle Skew (Note 10)			100			100			100	ps
t_{JITTER}	Random Clock Jitter (RMS)					1.5					ps
V_{PP}	Input Swing (Note 11)	150		1000	150		1000	150		1000	mV
t_r t_f	Output Rise/Fall Times Q (20% − 80%)	200		540	200		540	200		540	ps

NOTE: Device will meet the specifications after thermal equilibrium has been established when mounted in a test socket or printed circuit board with maintained transverse airflow greater than 500 lfpm. Electrical parameters are guaranteed only over the declared operating temperature range. Functional operation of the device exceeding these conditions is not implied. Device specification limit values are applied individually under normal operating conditions and not valid simultaneously.

8. V_{EE} can vary +0.8 V / −0.5 V.
9. Within-device skew is defined as identical transitions on similar paths through a device.
10. Duty cycle skew is defined only for differential operation when the delays are measured from the cross point of the inputs to the cross point of the outputs.
11. $V_{PP(}$min) is minimum input swing for which AC parameters guaranteed. The device has a DC gain of ≈ 40.

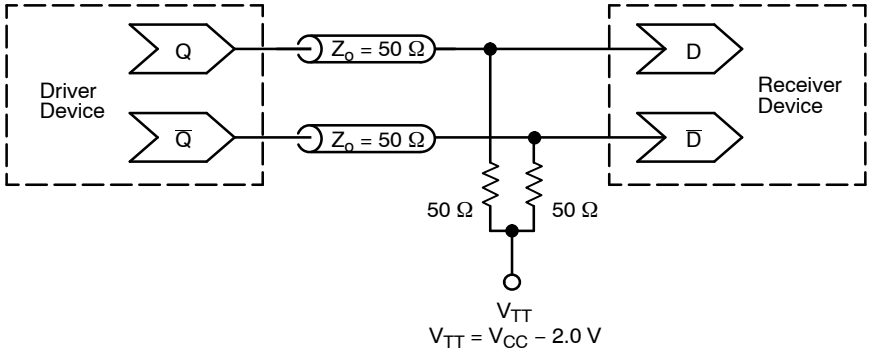

Figure 2. Typical Termination for Output Driver and Device Evaluation (See Application Note AND8020/D – Termination of ECL Logic Devices.)

ORDERING INFORMATION

Device	Package	Shipping†
MC100EL56DW	SO−20 WB	38 Units / Rail
MC100EL56DWG	SO−20 WB (Pb−Free)	38 Units / Rail
MC100EL56DWR2	SO−20 WB	1000 / Tape & Reel
MC100EL56DWR2G	SO−20 WB (Pb−Free)	1000 / Tape & Reel

†For information on tape and reel specifications, including part orientation and tape sizes, please refer to our Tape and Reel Packaging Specifications Brochure, BRD8011/D.

Resource Reference of Application Notes

AN1405/D – ECL Clock Distribution Techniques

AN1406/D – Designing with PECL (ECL at +5.0 V)

AN1503/D – ECLinPS™ I/O SPiCE Modeling Kit

AN1504/D – Metastability and the ECLinPS Family

AN1568/D – Interfacing Between LVDS and ECL

AN1672/D – The ECL Translator Guide

AND8001/D – Odd Number Counters Design

AND8002/D – Marking and Date Codes

AND8020/D – Termination of ECL Logic Devices

AND8066/D – Interfacing with ECLinPS

AND8090/D – AC Characteristics of ECL Devices

PACKAGE DIMENSIONS

SO−20 WB
DW SUFFIX
CASE 751D−05
ISSUE G

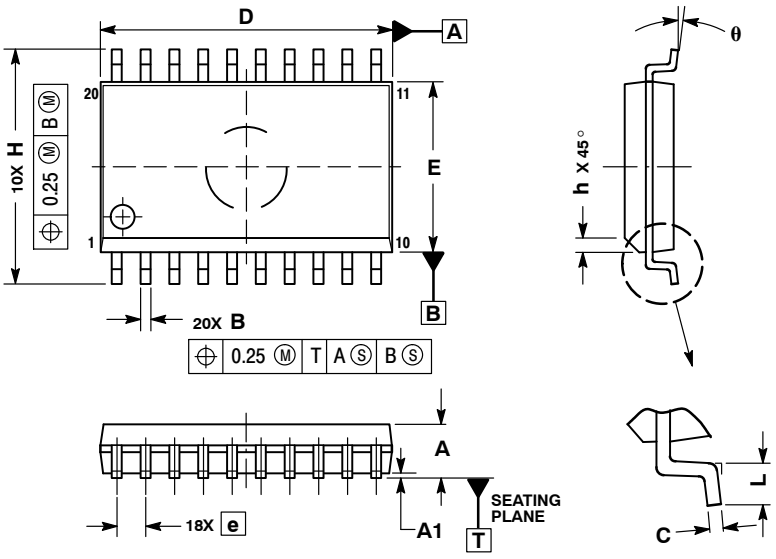

NOTES:
1. DIMENSIONS ARE IN MILLIMETERS.
2. INTERPRET DIMENSIONS AND TOLERANCES PER ASME Y14.5M, 1994.
3. DIMENSIONS D AND E DO NOT INCLUDE MOLD PROTRUSION.
4. MAXIMUM MOLD PROTRUSION 0.15 PER SIDE.
5. DIMENSION B DOES NOT INCLUDE DAMBAR PROTRUSION. ALLOWABLE PROTRUSION SHALL BE 0.13 TOTAL IN EXCESS OF B DIMENSION AT MAXIMUM MATERIAL CONDITION.

	MILLIMETERS	
DIM	MIN	MAX
A	2.35	2.65
A1	0.10	0.25
B	0.35	0.49
C	0.23	0.32
D	12.65	12.95
E	7.40	7.60
e	1.27 BSC	
H	10.05	10.55
h	0.25	0.75
L	0.50	0.90
θ	0°	7°

ECLinPS are registered trademarks of Semiconductor Components Industries, LLC (SCILLC).

ON Semiconductor and ON are registered trademarks of Semiconductor Components Industries, LLC (SCILLC). SCILLC reserves the right to make changes without further notice to any products herein. SCILLC makes no warranty, representation or guarantee regarding the suitability of its products for any particular purpose, nor does SCILLC assume any liability arising out of the application or use of any product or circuit, and specifically disclaims any and all liability, including without limitation special, consequential or incidental damages. “Typical” parameters which may be provided in SCILLC data sheets and/or specifications can and do vary in different applications and actual performance may vary over time. All operating parameters, including “Typicals” must be validated for each customer application by customer’s technical experts. SCILLC does not convey any license under its patent rights nor the rights of others. SCILLC products are not designed, intended, or authorized for use as components in systems intended for surgical implant into the body, or other applications intended to support or sustain life, or for any other application in which the failure of the SCILLC product could create a situation where personal injury or death may occur. Should Buyer purchase or use SCILLC products for any such unintended or unauthorized application, Buyer shall indemnify and hold SCILLC and its officers, employees, subsidiaries, affiliates, and distributors harmless against all claims, costs, damages, and expenses, and reasonable attorney fees arising out of, directly or indirectly, any claim of personal injury or death associated with such unintended or unauthorized use, even if such claim alleges that SCILLC was negligent regarding the design or manufacture of the part. SCILLC is an Equal Opportunity/Affirmative Action Employer. This literature is subject to all applicable copyright laws and is not for resale in any manner.

PUBLICATION ORDERING INFORMATION

LITERATURE FULFILLMENT:
Literature Distribution Center for ON Semiconductor
P.O. Box 5163, Denver, Colorado 80217 USA
Phone: 303−675−2175 or 800−344−3860 Toll Free USA/Canada
Fax: 303−675−2176 or 800−344−3867 Toll Free USA/Canada
Email: orderlit@onsemi.com

N. American Technical Support: 800−282−9855 Toll Free USA/Canada
Europe, Middle East and Africa Technical Support:
Phone: 421 33 790 2910
Japan Customer Focus Center
Phone: 81−3−5773−3850

ON Semiconductor Website: **www.onsemi.com**

Order Literature: http://www.onsemi.com/orderlit

For additional information, please contact your local Sales Representative