3.3 V ECL Programmable Delay Chip with FTUNE

MC100EP196

The MC100EP196 is a programmable delay chip (PDC) designed primarily for clock deskewing and timing adjustment. It provides variable delay of a differential NECL/PECL input transition. It has similar architecture to the EP195 with the added feature of further tuneability in delay using the FTUNE pin. The FTUNE input takes an analog voltage from V_{CC} to V_{EE} to fine tune the output delay from 0 to 60 ps.

The delay section consists of a programmable matrix of gates and multiplexers as shown in the logic diagram, Figure 2. The delay increment of the EP196 has a digitally selectable resolution of about 10 ps and a net range of up to 10.2 ns. The required delay is selected by the 10 data select inputs D[9:0] values and controlled by the LEN (pin 10). A LOW level on LEN allows a transparent LOAD mode of real time delay values by D[9:0]. A LOW to HIGH transition on LEN will LOCK and HOLD current values present against any subsequent changes in D[10:0]. The approximate delay values for varying tap numbers correlating to D0 (LSB) through D9 (MSB) are shown in Table 5.

Because the EP196 is designed using a chain of multiplexers, it has a fixed minimum delay of 2.4 ns. An additional pin, D10, is provided for controlling Pins 14 and 15, CASCADE and $\overline{\text{CASCADE}}$, also latched by LEN, in cascading multiple PDCs for increased programmable range. The cascade logic allows full control of multiple PDCs. Switching devices from all "1" states on D[0:9] with SETMAX LOW to all "0" states on D[0:9] with SETMAX HIGH will increase the delay equivalent to "D0", the minimum increment.

Select input pins, D[10:0], may be threshold controlled by combinations of interconnects between V_{EF} (pin 7) and V_{CF} (pin 8) for LVCMOS, ECL, or LVTTL level signals. LVTTL and LVCMOS operation is available in PECL mode only. For LVCMOS input levels, leave V_{CF} and V_{EF} open. For ECL operation, short V_{CF} and V_{EF} (pins 7 and 8). For LVTTL level operation, connect a 1.5 V supply reference to V_{CF} and leave open V_{EF} pin. The 1.5 V reference voltage to V_{CF} pin can be accomplished by placing a 2.2 kΩ resistor between V_{CF} and V_{EE} for 3.3 V power supply.

The V_{BB} pin, an internally generated voltage supply, is available to this device only. For single−ended input conditions, the unused differential input is connected to V_{BB} as a switching reference voltage. V_{BB} may also rebias AC coupled inputs. When used, decouple V_{BB} and V_{CC} via a 0.01 μF capacitor and limit current sourcing or sinking to 0.5 mA. When not used, V_{BB} should be left open.

The 100 Series contains temperature compensation.



LQFP−32, 7 × 7
FA SUFFIX
CASE 561AB−01

MARKING DIAGRAM*

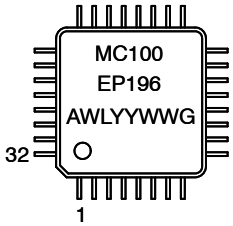

A	= Assembly Location
WL	= Wafer Lot
YY	= Year
WW	= Work Week
G	= Pb−Free Package

*For additional marking information, refer to Application Note AND8002/D.

- Maximum Frequency > 1.2 GHz Typical
- Programmable Range: 0 ns to 10 ns
- Delay Range: 2.4 ns to 12.4 ns
- 10 ps Increments
- PECL Mode Operating Range: V_{CC} = 3.0 V to 3.6 V with V_{EE} = 0 V
- NECL Mode Operating Range: V_{CC} = 0 V with V_{EE} = −3.0 V to −3.6 V
- Open Input Default State
- Safety Clamp on Inputs
- A Logic High on the $\overline{\text{EN}}$ Pin Will Force Q to Logic Low
- D[10:0] Can Accept Either ECL, LVCMOS, or LVTTL Inputs
- V_{BB} Output Reference Voltage
- These are Pb−Free Devices*

*For additional information on our Pb−Free strategy and soldering details, please download the **onsemi** Soldering and Mounting Techniques Reference Manual, SOLDERRM/D.

ORDERING INFORMATION

See detailed ordering and shipping information in the package dimensions section on page 17 of this data sheet.

© Semiconductor Components Industries, LLC,2014

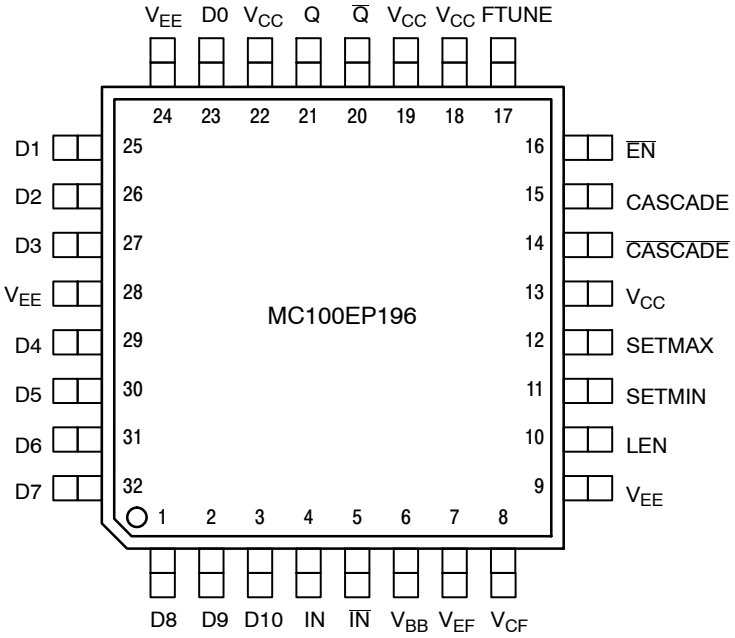

Figure 1. 32−Lead LQFP Pinout (Top View)

Table 1. PIN DESCRIPTION

Pin	Name	I/O	Default State	Description
23, 25, 26, 27, 29, 30, 31, 32, 1, 2	D[0:9]	LVCMOS, LVTTL, ECL Input	LOW	Single−ended Parallel Data Inputs [0:9]. Internal 75 kΩ to V_{EE}. (Note 1)
3	D[10]	LVCMOS, LVTTL, ECL Input	LOW	Single−ended CASCADE/$\overline{\text{CASCADE}}$ Control Input. Internal 75 kΩ to V_{EE}. (Note 1)
4	IN	ECL Input	LOW	Noninverted Differential Input. Internal 75 kΩ to V_{EE}.
5	$\overline{\text{IN}}$	ECL Input	HIGH	Inverted Differential Input. Internal 75 kΩ to V_{EE}.
6	V_{BB}	−	−	ECL Reference Voltage Output
7	V_{EF}	−	−	Reference Voltage for ECL Mode Connection
8	V_{CF}	−	−	LVCMOS, ECL, OR LVTTL Input Mode Select
9, 28	V_{EE}	−	−	Negative Supply Voltage. All V_{EE} Pins must be Externally Connected to Power Supply to Guarantee Proper Operation. (Note 2)
13, 18, 19, 22	V_{CC}	−	−	Positive Supply Voltage. All V_{CC} Pins must be externally Connected to Power Supply to Guarantee Proper Operation. (Note 2)
10	LEN	ECL Input	LOW	Single−ended D pins LOAD / HOLD input. Internal 75 kΩ to V_{EE}.
11	SETMIN	ECL Input	LOW	Single−ended Minimum Delay Set Logic Input. Internal 75 kΩ to V_{EE}. (Note 1)
12	SETMAX	ECL Input	LOW	Single−ended Maximum Delay Set Logic Input. Internal 75 kΩ to V_{EE}. (Note 1)
14	$\overline{\text{CASCADE}}$	ECL Output	−	Inverted Differential Cascade Output for D[10] Input. Typically Terminated with 50 Ω to $V_{TT} = V_{CC} - 2$ V.
15	CASCADE	ECL Output	−	Noninverted Differential Cascade Output for D[10] Input. Typically Terminated with 50 Ω to $V_{TT} = V_{CC} - 2$ V.
16	$\overline{\text{EN}}$	ECL Input	LOW	Single−ended Output Enable Pin. Internal 75 kΩ to V_{EE}.
17	FTUNE	Analog Input	−	Fine Tuning Input.
21	Q	ECL Output	−	Noninverted Differential Output. Typically Terminated with 50 Ω to $V_{TT} = V_{CC} - 2$ V.
20	$\overline{\text{Q}}$	ECL Output	−	Inverted Differential Output. Typically Terminated with 50 Ω to $V_{TT} = V_{CC} - 2$ V.

1. SETMIN will override SETMAX if both are high. SETMAX and SETMIN will override all D[0:10] inputs.
2. All V_{CC} and V_{EE} pins must be externally connected to Power Supply to guarantee proper operation.

Table 2. CONTROL PIN

Pin	State	Function
EN	LOW (Note 3)	Input Signal is Propagated to the Output
	HIGH	Output Holds Logic Low State
LEN	LOW (Note 3)	Transparent or LOAD mode for real time delay values present on D[0:10].
	HIGH	LOCK and HOLD mode for delay values on D[0:10]; further changes on D[0:10] are not recognized and do not affect delay.
SETMIN	LOW (Note 3)	Output Delay set by D[0:10]
	HIGH	Set Minimum Output Delay
SETMAX	LOW (Note 3)	Output Delay set by D[0:10]
	HIGH	Set Maximum Output Delay
D10	LOW	CASCADE Output LOW, $\overline{\text{CASCADE}}$ Output HIGH
	HIGH	$\overline{\text{CASCADE}}$ Output LOW, CASCADE Output High

3. Internal pulldown resistor will provide a logic LOW if pin is left unconnected.

Table 3. CONTROL D[0:10] INTERFACE

Pin	State	Function
V_{CF}	V_{EF} Pin (Note 4)	ECL Mode
V_{CF}	No Connect	LVCMOS Mode
V_{CF}	1.5 V ± 100 mV	LVTTL Mode (Note 5)

4. Short V_{CF} (pin 8) and V_{EF} (pin 7).
5. When Operating in LVTTL Mode, the reference voltage can be provided by connecting an external resistor, R_{CF} (suggested resistor value is 2.2 kΩ ±5%), between V_{CF} and V_{EE} pins.

Table 4. DATA INPUT ALLOWED OPERATING VOLTAGE MODE TABLE

POWER SUPPLY	CONTROL DATA SELECT INPUTS PINS (D [0:10])			
	LVCMOS	LVTTL	LVPECL	LVNECL
PECL Mode Operating Range	YES	YES	YES	N/A
NECL Mode Operating Range	N/A	N/A	N/A	YES

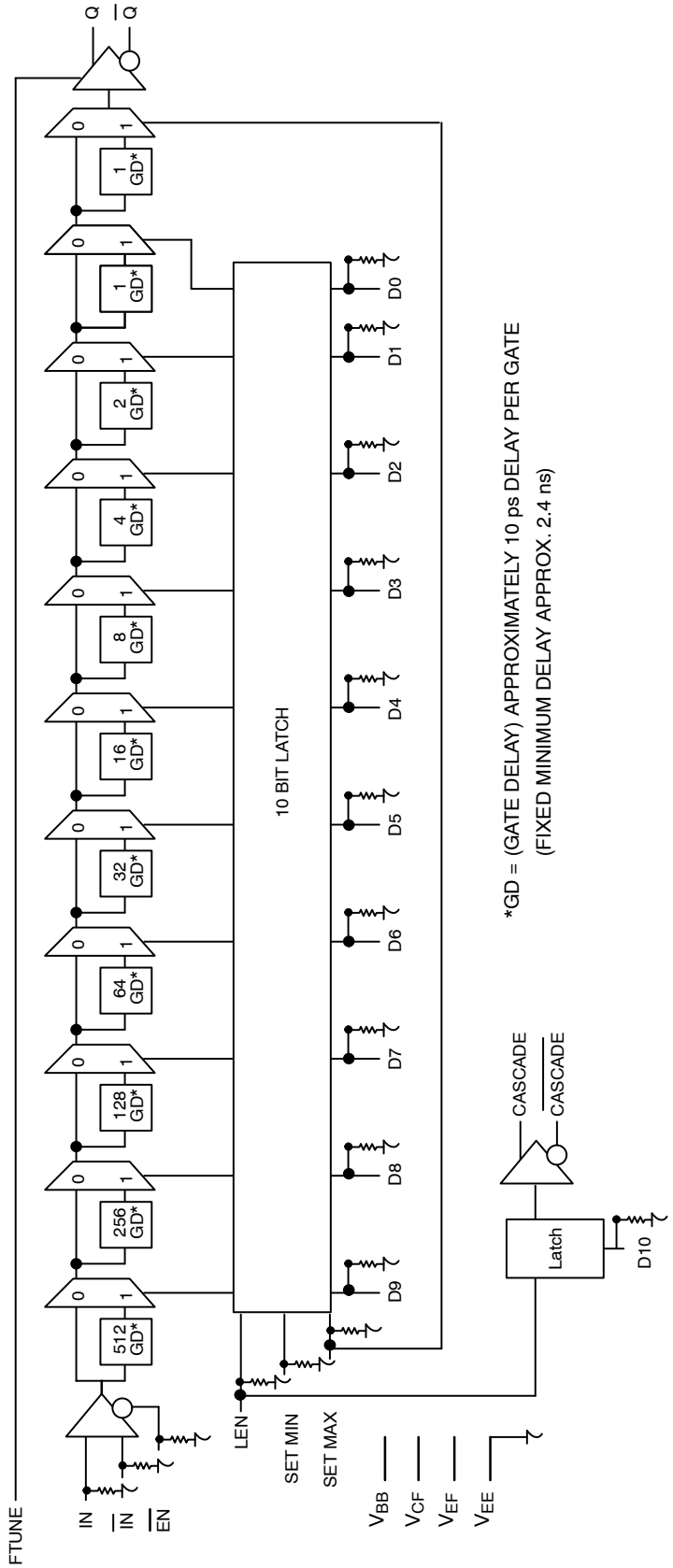

Figure 2. Logic Diagram

Table 5. THEORETICAL DELTA DELAY VALUES

D(9:0) Value	SETMIN	SETMAX	Programmable Delay*
XXXXXXXXXX	H	L	0 ps
0000000000	L	L	0 ps
0000000001	L	L	10 ps
0000000010	L	L	20 ps
0000000011	L	L	30 ps
0000000100	L	L	40 ps
0000000101	L	L	50 ps
0000000110	L	L	60 ps
0000000111	L	L	70 ps
0000001000	L	L	80 ps
0000010000	L	L	160 ps
0000100000	L	L	320 ps
0001000000	L	L	640 ps
0010000000	L	L	1280 ps
0100000000	L	L	2560 ps
1000000000	L	L	5120 ps
1111111111	L	L	10230 ps
XXXXXXXXXX	L	H	10240 ps

*Fixed minimum delay not included.

Table 6. TYPICAL FTUNE DELAY PIN

Input Range	Output Range
V_{CC}–V_{EE} (V)	0 – 60 (ps)

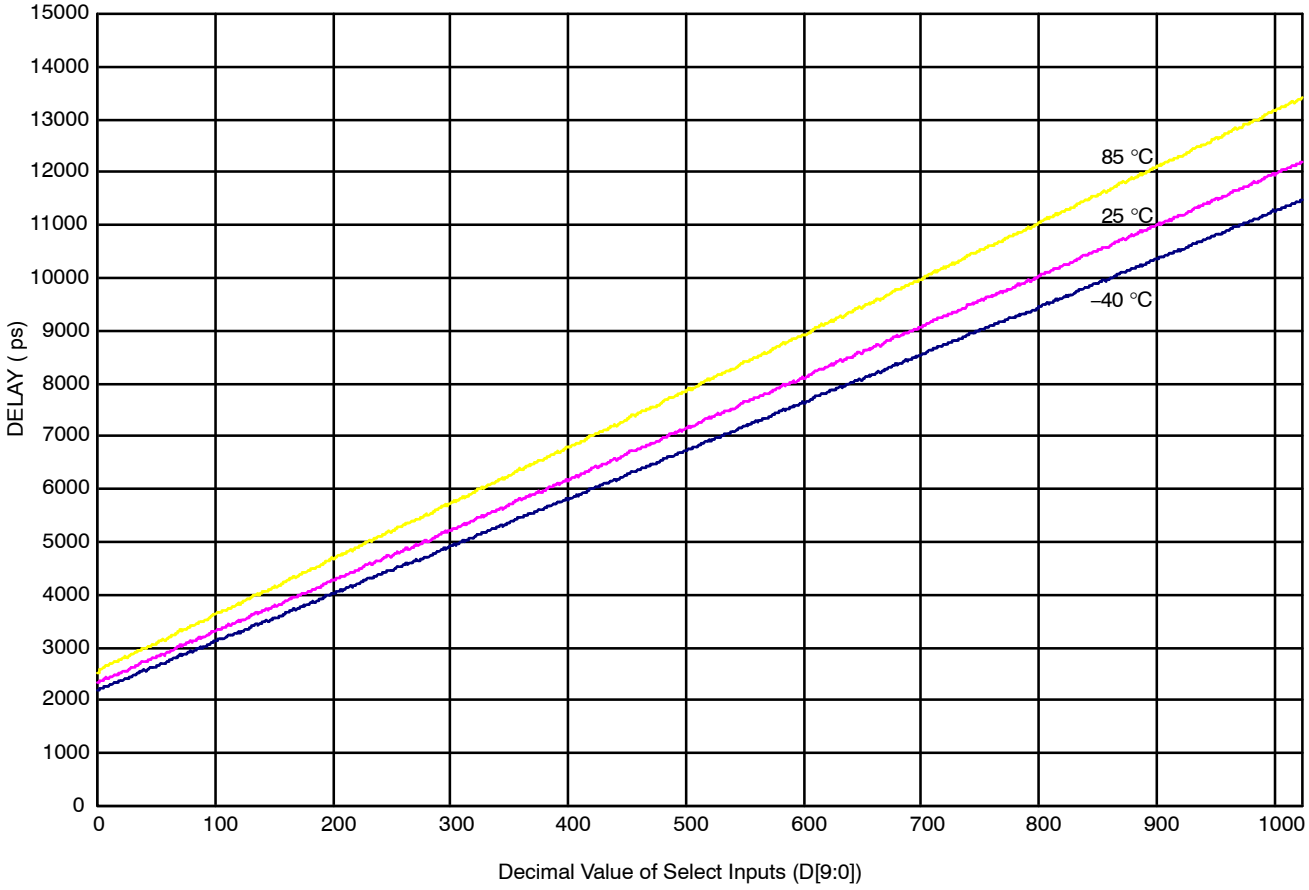

Figure 3. Measured Delay vs. Select Inputs

Table 7. ATTRIBUTES

Characteristics		Value
Internal Input Pulldown Resistor		75 kΩ
Internal Input Pullup Resistor		N/A
ESD Protection	Human Body Model Machine Model Charged Device Model	> 2 kV > 100 V > 2 kV
Moisture Sensitivity, Indefinite Time Out of Drypack (Note 1)		Pb−Free Pkg
	LQFP−32	Level 2
Flammability Rating Oxygen Index: 28 to 34		UL 94 V−0 @ 0.125 in
Transistor Count		1237 Devices
Meets or exceeds JEDEC Spec EIA/JESD78 IC Latchup Test		

1. For additional information, see Application Note AND8003/D.

Table 8. MAXIMUM RATINGS

Symbol	Parameter	Condition 1	Condition 2	Rating	Units
V_{CC}	PECL Mode Power Supply	V_{EE} = 0 V		6	V
V_{EE}	NECL Mode Power Supply	V_{CC} = 0 V		−6	V
V_I	PECL Mode Input Voltage NECL Mode Input Voltage	V_{EE} = 0 V V_{CC} = 0 V	$V_I \le V_{CC}$ $V_I \ge V_{EE}$	6 −6	V V
I_{out}	Output Current	Continuous Surge		50 100	mA mA
I_{BB}	V_{BB} Sink/Source			± 0.5	mA
T_A	Operating Temperature Range			−40 to +85	°C
T_{stg}	Storage Temperature Range			−65 to +150	°C
θ_{JA}	Thermal Resistance (Junction−to−Ambient)	0 lfpm 500 lfpm	LQFP−32 LQFP−32	80 55	°C/W °C/W
θ_{JC}	Thermal Resistance (Junction−to−Case)	Standard Board	LQFP−32	12 to 17	°C/W
T_{sol}	Wave Solder Pb−Free			265	°C

Stresses exceeding those listed in the Maximum Ratings table may damage the device. If any of these limits are exceeded, device functionality should not be assumed, damage may occur and reliability may be affected.

Table 9. DC CHARACTERISTICS, PECL V_{CC} = 3.3 V, V_{EE} = 0 V (Note 2)

Symbol	Characteristic	−40°C			25°C			85°C			Unit
		Min	Typ	Max	Min	Typ	Max	Min	Typ	Max	
I_{EE}	Power Supply Current	100	125	160	110	130	170	110	135	175	mA
V_{OH}	Output HIGH Voltage (Note 3)	2155	2300	2405	2155	2300	2405	2155	2300	2405	mV
V_{OL}	Output LOW Voltage (Note 3)	1305	1520	1605	1305	1500	1605	1305	1485	1605	mV
V_{IH}	Input HIGH Voltage (Single−Ended) LVPECL LVCMOS LVTTL	 2075 2000 2000		 2420 3300 3300	 2075 2000 2000		 2420 3300 3300	 2075 2000 2000		 2420 3300 3300	mV
V_{IL}	Input LOW Voltage (Single−Ended) LVPECL LVCMOS LVTTL	 1305 0 0		 1675 800 800	 1305 0 0		 1675 800 800	 1305 0 0		 1675 800 800	mV
V_{BB}	Output Voltage Reference	1775	1875	1975	1775	1875	1975	1775	1875	1975	mV
V_{CF}	LVTTL Mode Input Detect Voltage @ IV_{CF} = 700 μA	1.4	1.5	1.6	1.4	1.5	1.6	1.4	1.5	1.6	V
V_{EF}	Reference Voltage for ECL Mode Connection	1900	1960	2050	1875	1953	2050	1850	1945	2050	mV
V_{IHCMR}	Input HIGH Voltage Common Mode Range (Differential Configuration) (Note 4)	2.0		3.3	2.0		3.3	2.0		3.3	V
I_{IH}	Input HIGH Current (PECL) IN, $\overline{IN}$, $\overline{EN}$, LEN, SETMIN, SETMAX			 150			 150			 150	μA
I_{IHH}	FTUNE Input High Current @ V_{CC}	50	87	150	50	84	150	50	82	150	μA
I_{IL}	Input LOW Current (PECL) IN, $\overline{IN}$, $\overline{EN}$, LEN, SETMIN, SETMAX	 0.5			 0.5			 0.5			μA
I_{ILL}	FTUNE Input LOW Current @V_{EE}	−10	0	10	−10	0	10	−10	0	10	μA

NOTE: Device will meet the specifications after thermal equilibrium has been established when mounted in a test socket or printed circuit board with maintained transverse airflow greater than 500 lfpm.

2. Input and output parameters vary 1:1 with V_{CC}. V_{EE} can vary +0.3 V to −0.3 V.
3. All loading with 50 Ω to V_{CC} − 2.0 V.
4. V_{IHCMR} min varies 1:1 with V_{EE}, V_{IHCMR} max varies 1:1 with V_{CC}. The V_{IHCMR} range is referenced to the most positive side of the differential input signal.

Table 10. DC CHARACTERISTICS, NECL V_{CC} = 0 V, V_{EE} = −3.3 V (Note 5)

Symbol	Characteristic	−40°C			25°C			85°C			Unit
		Min	Typ	Max	Min	Typ	Max	Min	Typ	Max	
I_{EE}	Power Supply Current	100	125	160	110	130	170	110	135	175	mA
V_{OH}	Output HIGH Voltage (Note 6)	−1145	−1000	−895	−1145	−1000	−895	−1145	−1000	−895	mV
V_{OL}	Output LOW Voltage (Note 6)	−1995	−1780	−1695	−1995	−1800	−1695	−1995	−1815	−1695	mV
V_{IH}	Input HIGH Voltage (Single−Ended) LVNECL	−1225		−880	−1225		−880	−1225		−880	mV
V_{IL}	Input LOW Voltage (Single−Ended) LVNECL	−1995		−1625	−1995		−1625	−1995		−1625	mV
V_{BB}	Output Voltage Reference	−1525	−1425	−1325	−1525	−1425	−1325	−1525	−1425	−1325	mV
V_{EF}	Reference Voltage for ECL Mode Connection	−1400	−1340	−1250	−1425	−1347	−1250	−1450	−1355	−1250	mV
V_{IHCMR}	Input HIGH Voltage Common Mode Range (Differential Configuration) (Note 7)	V_{EE}+2.0		0	V_{EE}+2.0		0	V_{EE}+2.0		0	V
I_{IH}	Input HIGH Current IN, $\overline{IN}$, $\overline{EN}$, LEN, SETMIN, SETMAX			150			150			150	μA
I_{IHH}	FTUNE Input High Current @ V_{CC}	50	87	150	50	84	150	50	82	150	μA
I_{IL}	Input LOW Current IN, $\overline{IN}$, $\overline{EN}$, LEN, SETMIN, SETMAX	0.5			0.5			0.5			μA
I_{ILL}	FTUNE Input LOW Current @ V_{EE}	−10	0	10	−10	0	10	−10	0	10	μA

NOTE: Device will meet the specifications after thermal equilibrium has been established when mounted in a test socket or printed circuit board with maintained transverse airflow greater than 500 lfpm.

5. Input and output parameters vary 1:1 with V_{CC}. V_{EE} can vary +0.3 V to −0.3 V.
6. All loading with 50 Ω to V_{CC} − 2.0 V.
7. V_{IHCMR} min varies 1:1 with V_{EE}, V_{IHCMR} max varies 1:1 with V_{CC}. The V_{IHCMR} range is referenced to the most positive side of the differential input signal.

Table 11. AC CHARACTERISTICS V_{CC} = 0 V; V_{EE} = −3.0 V to −3.6 V or V_{CC} = 3.0 V to 3.6 V; V_{EE} = 0 V (Note 8)

Symbol	Characteristic	−40°C			25°C			85°C			Unit
		Min	Typ	Max	Min	Typ	Max	Min	Typ	Max	
f_{max}	Maximum Frequency		1.2			1.2			1.2		GHz
t_{PLH} t_{PHL}	Propagation Delay										ps
	IN to Q; D(0−9) = 0	1810	2210	2610	1960	2360	2760	2180	2580	2980	
	IN to Q; D(0−9) = 1023	9500	11496	13500	10000	12258	14000	10955	13454	15955	
	$\overline{EN}$ to Q; D(0−9) = 0	1780	2277	2780	1930	2430	2930	2150	2650	3150	
	D10 to CASCADE	350	450	550	380	477	580	420	520	620	
t_{RANGE}	Programmable Range {D(0−9) = HI} − {D(0−9) = LO}	8600	9285	10000	9200	9897	10700	9900	10875	12000	ps
Δt	Step Delay (Note 9)										ps
	D0 High		7			11			13		
	D1 High		23			30			32		
	D2 High		39			48			53		
	D3 High		58			67			73		
	D4 High	90	137	185	100	149	200	90	154	225	
	D5 High	245	293	335	260	313	370	270	337	410	
	D6 High	530	590	650	560	629	710	600	681	770	
	D7 High	1060	1158	1265	1130	1237	1355	1200	1353	1520	
	D8 High	2160	2317	2490	2290	2472	2680	2450	2712	3015	
	D9 High	4335	4647	5010	4590	4955	5385	4935	5440	6015	
Mono	Monotonicity (Note 10)										ps
t_{SKEW}	Duty Cycle Skew (Note 11) $\lvert t_{PHL} - t_{PLH} \rvert$		20			22			27		ps
t_s	Setup Time										ps
	D to LEN	150	−10		150	−70		150	−70		
	D to IN (Note 12)	100	−130		100	−150		100	−165		
	$\overline{EN}$ to IN (Note 13)	150	−105		150	−120		150	−140		
t_h	Hold Time										ps
	LEN to D	225	170		200	70		200	60		
	IN to $\overline{EN}$ (Note 14)	450	275		450	305		450	325		
t_R	Release Time										ps
	$\overline{EN}$ to IN (Note 15)	150	−105		150	−120		150	−140		
	SET MAX to LEN	400	70		400	110		400	160		
	SET MIN to LEN	300	165		350	180		350	205		
t_{jit}	Random Clock Jitter @ 1.2 GHz, SETMAX Delay		3			3			3		ps
V_{PP}	Input Voltage Swing (Differential Configuration)	150	800	1200	150	800	1200	150	800	1200	mV
t_r t_f	Output Rise/Fall Time										ps
	20−80% (Q)	85	110	130	95	120	145	110	135	160	
	20−80% (CASCADE)	100	150	200	110	160	210	125	175	225	

NOTE: Device will meet the specifications after thermal equilibrium has been established when mounted in a test socket or printed circuit board with maintained transverse airflow greater than 500 lfpm.

8. Measured using a 750 mV source, 50% duty cycle clock source. All loading with 50 Ω to V_{CC} − 2.0 V.
9. Specification limits represent the amount of delay added with the assertion of each individual delay control pin. The various combinations of asserted delay control inputs will typically realize D0 resolution steps across the specified programmable range.
10. The monotonicity indicates the increased delay value for each binary count increment on the control inputs D(0−9).
11. Duty cycle skew guaranteed only for differential operation measured from the cross point of the input to the cross point of the output.
12. This setup time defines the amount of time prior to the input signal the delay tap of the device must be set.
13. This setup time is the minimum time that $\overline{EN}$ must be asserted prior to the next transition of IN/$\overline{IN}$ to prevent an output response greater than V_{CC} − 1425 mV to that IN/$\overline{IN}$ transition.
14. This hold time is the minimum time that $\overline{EN}$ must remain asserted after a negative going IN or positive going $\overline{IN}$ to prevent an output response greater than V_{CC} − 1425 mV to that IN/$\overline{IN}$ transition.
15. This release time is the minimum time that $\overline{EN}$ must be deasserted prior to the next IN/$\overline{IN}$ transition to ensure an output response that meets the specified IN to Q propagation delay and transition times.

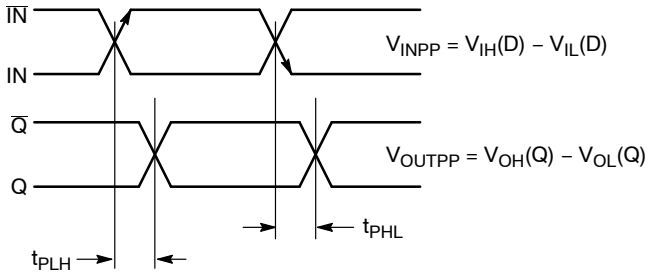

Figure 4. AC Reference Measurement

USING THE FTUNE ANALOG INPUT

The analog FTUNE pin on the EP196 device is intended to add more delay in a tunable gate to enhance the 10 ps resolution capabilities of the fully digital EP196. The level of resolution obtained is dependent on the voltage applied to the FTUNE pin.

To provide this further level of resolution, the FTUNE pin must be capable of adjusting the additional delay finer than the 10 ps digital resolution (See Logic Diagram). This requirement is easily achieved because a 60 ps additional delay can be obtained over the entire FTUNE voltage range (See Figure 5). This extra analog range ensures that the FTUNE pin will be capable even under worst case conditions of covering a digital resolution. Typically, the analog input will be driven by an external DAC to provide a digital control with very fine analog output steps. The final resolution of the device will be dependent on the width of the DAC chosen.

To determine the voltage range necessary for the FTUNE input, Figure 5 should be used. There are numerous voltage ranges which can be used to cover a given delay range; users are given the flexibility to determine which one best fits their designs.

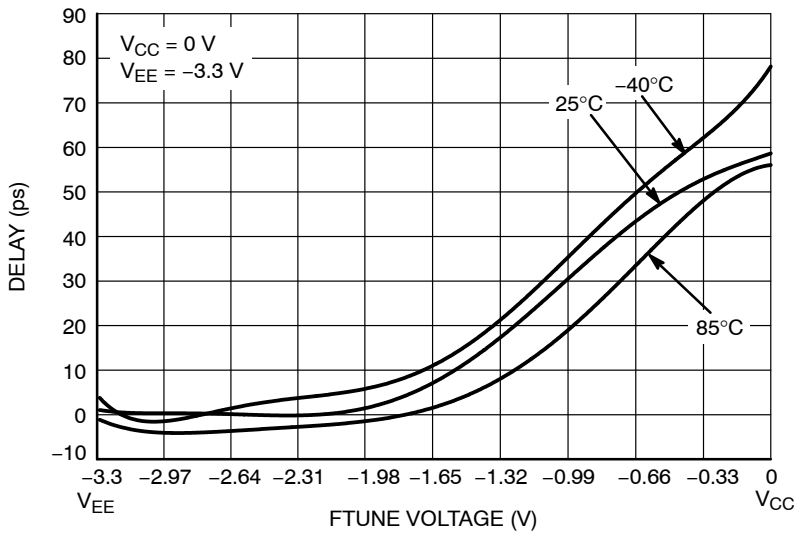

Figure 5. Typical EP196 Delay versus FTUNE Voltage

CASCADING MULTIPLE EP196S

To increase the programmable range of the EP196, internal cascade circuitry has been included. This circuitry allows for the cascading of multiple EP196s without the need for any external gating. Furthermore, this capability requires only one more address line per added E196. Obviously, cascading multiple programmable delay chips will result in a larger programmable range; however, this increase is at the expense of a longer minimum delay.

Figure 6 illustrates the interconnect scheme for cascading two EP196s. As can be seen, this scheme can easily be expanded for larger EP196 chains. The D10 input of the EP196 is the cascade control pin and when assert HIGH switches output pin CASCADE to HIGH and pin $\overline{\text{CASCADE}}$ to LOW. With the interconnect scheme of Figure 6 when D10 is asserted, it signals the need for a larger programmable range than is achievable with a single device. The A11 address can be added to generate a cascade output for the next EP196. For a 2−device configuration, A11 is not required.

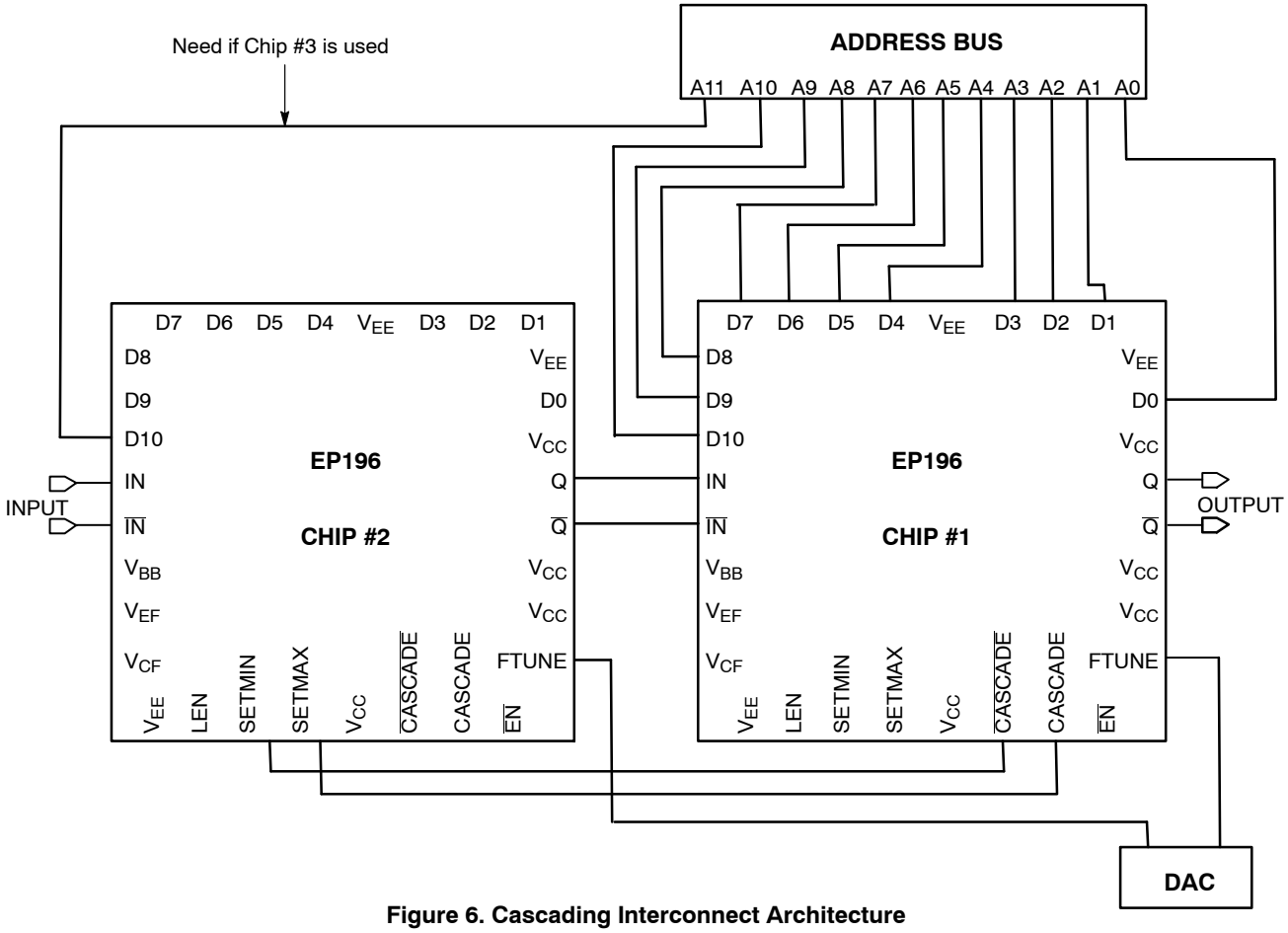

Figure 6. Cascading Interconnect Architecture

An expansion of the latch section of the block diagram is pictured in Figure 7. Use of this diagram will simplify the explanation of how the SETMIN and SETMAX circuitry works in cascade. When D10 of chip #1 in Figure 5 is LOW, this device's cascade output will also be LOW while the $\overline{\text{CASCADE}}$ output will be HIGH. In this condition, the SETMIN pin of chip #2 will be asserted HIGH and thus all of the latches of chip #2 will be reset and the device will be set at its minimum delay.

Chip #1, on the other hand, will have both SETMIN and SETMAX deasserted so that its delay will be controlled entirely by the address bus A0−A9. If the delay needed is greater than can be achieved with 1023 gate delays (1111111111 on the A0−A9 address bus), D10 will be asserted to signal the need to cascade the delay to the next EP196 device. When D10 is asserted, the SETMIN pin of chip #2 will be deasserted and the SETMAX pin asserted, resulting in the device delay to be the maximum delay. Table 12 shows the delay time of two EP196 chips in cascade.

To expand this cascading scheme to more devices, one simply needs to connect the D10 pin from the next chip to the address bus and CASCADE outputs to the next chip in the same manner as pictured in Figure 6. The only addition to the logic is the increase of one line to the address bus for cascade control of the second programmable delay chip.

Furthermore, to fully utilize EP196, the FTUNE pin can be used for additional delay and for finer resolution than 10 ps. As shown in Figure 5, an analog voltage input from DAC can adjust the FTUNE pin with an extra 60 ps of delay for each chip.

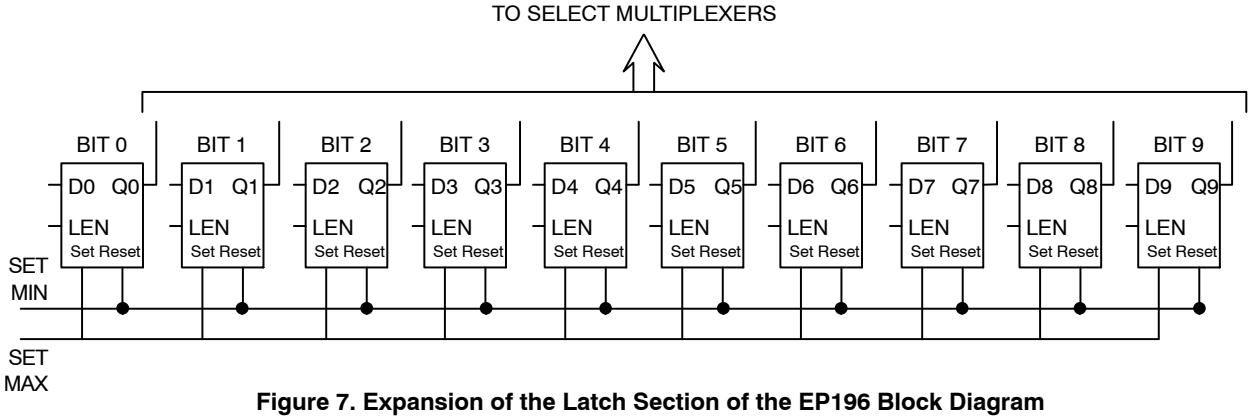

Figure 7. Expansion of the Latch Section of the EP196 Block Diagram

Table 12. CASCADED DELAY VALUE OF TWO EP196S

VARIABLE INPUT TO CHIP #1 AND *SETMIN* FOR CHIP #2												
INPUT FOR CHIP #1												Total
D10	D9	D8	D7	D6	D5	D4	D3	D2	D1	D0	Delay Value	Delay Value
0	0	0	0	0	0	0	0	0	0	0	0 ps	4400 ps
0	0	0	0	0	0	0	0	0	0	1	10 ps	4410 ps
0	0	0	0	0	0	0	0	0	1	0	20 ps	4420 ps
0	0	0	0	0	0	0	0	0	1	1	30 ps	4430 ps
0	0	0	0	0	0	0	0	1	0	0	40 ps	4440 ps
0	0	0	0	0	0	0	0	1	0	1	50 ps	4450 ps
0	0	0	0	0	0	0	0	1	1	0	60 ps	4460 ps
0	0	0	0	0	0	0	0	1	1	1	70 ps	4470 ps
0	0	0	0	0	0	0	1	0	0	0	80 ps	4480 ps
0	0	0	0	0	0	1	0	0	0	0	160 ps	4560 ps
0	0	0	0	0	1	0	0	0	0	0	320 ps	4720 ps
0	0	0	0	1	0	0	0	0	0	0	640 ps	5040 ps
0	0	0	1	0	0	0	0	0	0	0	1280 ps	5680 ps
0	0	1	0	0	0	0	0	0	0	0	2560 ps	6960 ps
0	1	0	0	0	0	0	0	0	0	0	5120 ps	9520 ps
0	1	1	1	1	1	1	1	1	1	1	10230 ps	14630 ps

VARIABLE INPUT TO CHIP #1 AND *SETMAX* FOR CHIP #2												
INPUT FOR CHIP #1												Total
D10	D9	D8	D7	D6	D5	D4	D3	D2	D1	D0	Delay Value	Delay Value
1	0	0	0	0	0	0	0	0	0	0	10240 ps	14640 ps
1	0	0	0	0	0	0	0	0	0	1	10250 ps	14650 ps
1	0	0	0	0	0	0	0	0	1	0	10260 ps	14660 ps
1	0	0	0	0	0	0	0	0	1	1	10270 ps	14670 ps
1	0	0	0	0	0	0	0	1	0	0	10280 ps	14680 ps
1	0	0	0	0	0	0	0	1	0	1	10290 ps	14690 ps
1	0	0	0	0	0	0	0	1	1	0	10300 ps	14700 ps
1	0	0	0	0	0	0	0	1	1	1	10310 ps	14710 ps
1	0	0	0	0	0	0	1	0	0	0	10320 ps	14720 ps
1	0	0	0	0	0	1	0	0	0	0	10400 ps	14800 ps
1	0	0	0	0	1	0	0	0	0	0	10560 ps	14960 ps
1	0	0	0	1	0	0	0	0	0	0	10880 ps	15280 ps
1	0	0	1	0	0	0	0	0	0	0	11520 ps	15920 ps
1	0	1	0	0	0	0	0	0	0	0	12800 ps	17200 ps
1	1	0	0	0	0	0	0	0	0	0	15360 ps	19760 ps
1	1	1	1	1	1	1	1	1	1	1	20470 ps	24870 ps

MULTI−CHANNEL DESKEWING

The most practical application for EP196 is in multiple channel delay matching. Slight differences in impedance and cable length can create large timing skews within a high−speed system. To deskew multiple signal channels, each channel can be sent through each EP196 as shown in Figure 8. One signal channel can be used as reference and the other EP196s can be used to adjust the delay to eliminate the timing skews. Nearly any high−speed system can be fine tuned (as small as 10 ps) to reduce the skew to extremely tight tolerances using the available FTUNE pin.

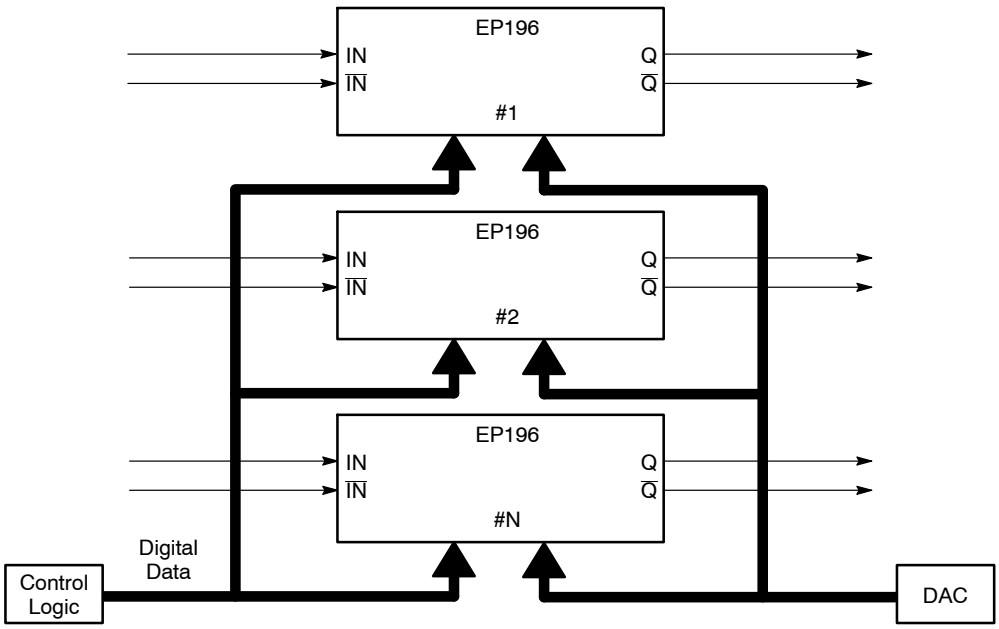

Figure 8. Multiple Channel Deskewing Diagram

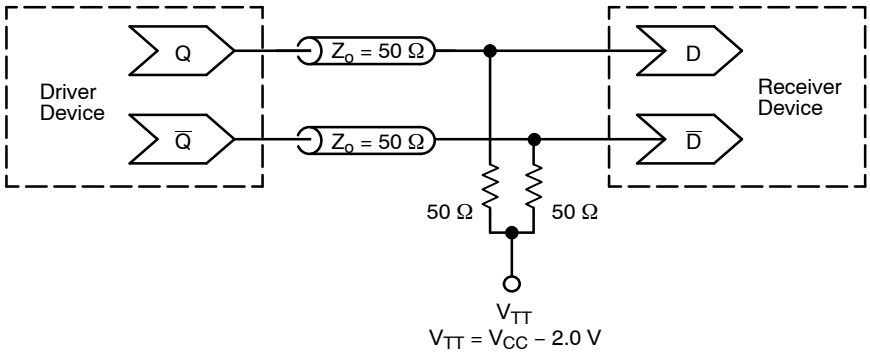

Figure 9. Typical Termination for Output Driver and Device Evaluation (See Application Note AND8020/D – Termination of ECL Logic Devices.)

ORDERING INFORMATION

Device	Package	Shipping†
MC100EP196FAG	LQFP−32 (Pb−Free)	250 Units / Tray
MC100EP196FAR2G	LQFP−32 (Pb−Free)	2000 / Tape & Reel

†For information on tape and reel specifications, including part orientation and tape sizes, please refer to our Tape and Reel Packaging Specifications Brochure, BRD8011/D.

Resource Reference of Application Notes

AN1405/D – ECL Clock Distribution Techniques

AN1406/D – Designing with PECL (ECL at +5.0 V)

AN1503/D – ECLinPS™ I/O SPiCE Modeling Kit

AN1504/D – Metastability and the ECLinPS Family

AN1568/D – Interfacing Between LVDS and ECL

AN1672/D – The ECL Translator Guide

AND8001/D – Odd Number Counters Design

AND8002/D – Marking and Date Codes

AND8020/D – Termination of ECL Logic Devices

AND8066/D – Interfacing with ECLinPS

AND8090/D – AC Characteristics of ECL Devices

ECLinPS is a trademark of Semiconductor Components Industries, LLC dba “**onsemi**” or its affiliates and/or subsidiaries in the United States and/or other countries.

LQFP−32, 7x7
CASE 561AB−01
ISSUE O

DATE 19 JUN 2008

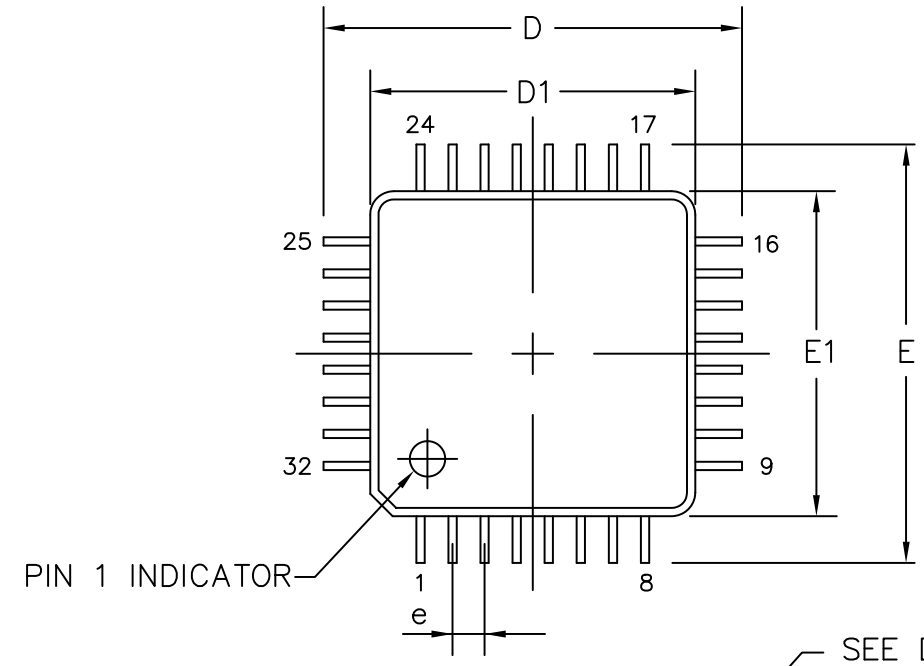

SYMBOL	MIN	NOM	MAX
A	–	–	1.60
A1	0.05	–	0.15
A2	1.35	1.40	1.45
B	0.30	0.37	0.45
B1	0.30	0.35	0.40
C	0.09	–	0.20
C1	0.09	–	0.16
D	9.00 BSC		
D1	7.00 BSC		
E	9.00 BSC		
E1	7.00 BSC		
e	0.80 BSC.		
L	0.45	0.60	0.75
L1	1.00		
R1	0.08	–	0.20
α°	11	–	13
β°	0	–	7
γ°	0	–	–

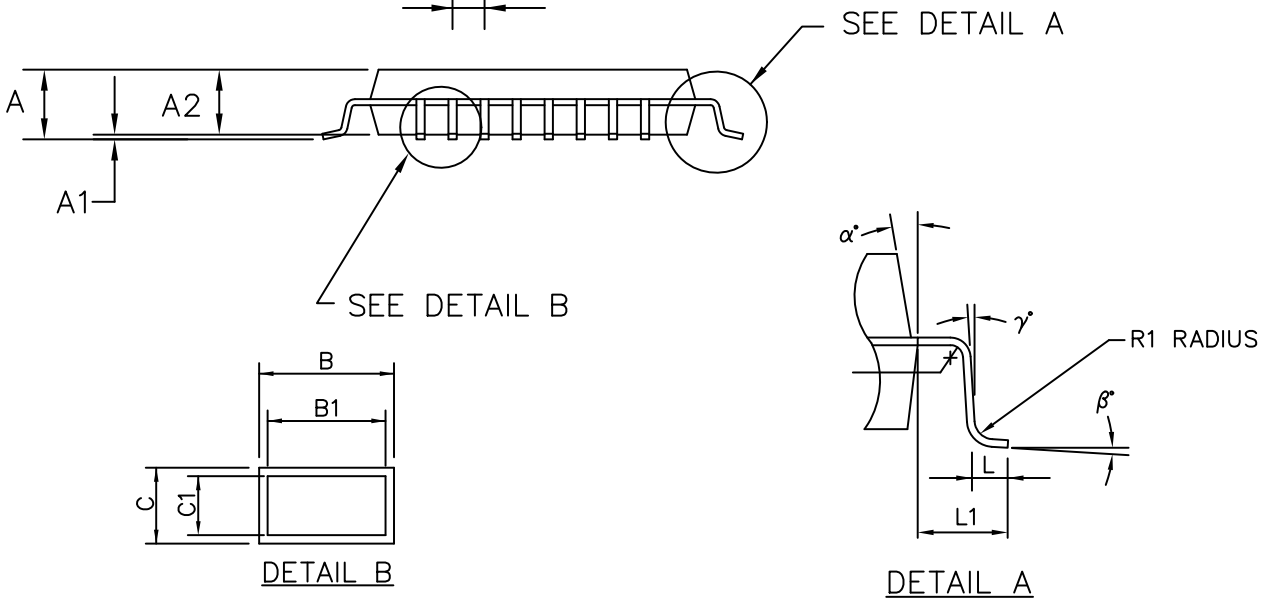

ALL DIMENSIONS IN MM

DOCUMENT NUMBER:	**98AON30893E**	Electronic versions are uncontrolled except when accessed directly from the Document Repository. Printed versions are uncontrolled except when stamped "CONTROLLED COPY" in red.
DESCRIPTION:	**32 LEAD LQFP, 7X7**	**PAGE 1 OF 1**

ON Semiconductor and ON are trademarks of Semiconductor Components Industries, LLC dba ON Semiconductor or its subsidiaries in the United States and/or other countries. ON Semiconductor reserves the right to make changes without further notice to any products herein. ON Semiconductor makes no warranty, representation or guarantee regarding the suitability of its products for any particular purpose, nor does ON Semiconductor assume any liability arising out of the application or use of any product or circuit, and specifically disclaims any and all liability, including without limitation special, consequential or incidental damages. ON Semiconductor does not convey any license under its patent rights nor the rights of others.

© Semiconductor Components Industries, LLC, 2019

onsemi, , and other names, marks, and brands are registered and/or common law trademarks of Semiconductor Components Industries, LLC dba "**onsemi**" or its affiliates and/or subsidiaries in the United States and/or other countries. **onsemi** owns the rights to a number of patents, trademarks, copyrights, trade secrets, and other intellectual property. A listing of **onsemi**'s product/patent coverage may be accessed at www.onsemi.com/site/pdf/Patent−Marking.pdf. **onsemi** reserves the right to make changes at any time to any products or information herein, without notice. The information herein is provided "as−is" and **onsemi** makes no warranty, representation or guarantee regarding the accuracy of the information, product features, availability, functionality, or suitability of its products for any particular purpose, nor does **onsemi** assume any liability arising out of the application or use of any product or circuit, and specifically disclaims any and all liability, including without limitation special, consequential or incidental damages. Buyer is responsible for its products and applications using **onsemi** products, including compliance with all laws, regulations and safety requirements or standards, regardless of any support or applications information provided by **onsemi**. "Typical" parameters which may be provided in **onsemi** data sheets and/or specifications can and do vary in different applications and actual performance may vary over time. All operating parameters, including "Typicals" must be validated for each customer application by customer's technical experts. **onsemi** does not convey any license under any of its intellectual property rights nor the rights of others. **onsemi** products are not designed, intended, or authorized for use as a critical component in life support systems or any FDA Class 3 medical devices or medical devices with a same or similar classification in a foreign jurisdiction or any devices intended for implantation in the human body. Should Buyer purchase or use **onsemi** products for any such unintended or unauthorized application, Buyer shall indemnify and hold **onsemi** and its officers, employees, subsidiaries, affiliates, and distributors harmless against all claims, costs, damages, and expenses, and reasonable attorney fees arising out of, directly or indirectly, any claim of personal injury or death associated with such unintended or unauthorized use, even if such claim alleges that **onsemi** was negligent regarding the design or manufacture of the part. **onsemi** is an Equal Opportunity/Affirmative Action Employer. This literature is subject to all applicable copyright laws and is not for resale in any manner.

ADDITIONAL INFORMATION

TECHNICAL PUBLICATIONS:
Technical Library: www.onsemi.com/design/resources/technical−documentation
onsemi Website: www.onsemi.com

ONLINE SUPPORT: www.onsemi.com/support
For additional information, please contact your local Sales Representative at www.onsemi.com/support/sales