MC10EP58, MC100EP58

3.3V / 5V ECL 2:1 Multiplexer

Description

The MC10/100EP58 is a 2:1 multiplexer. The device is pin and functionally equivalent to the EL58 and LVEL58 devices.

The 100 Series contains temperature compensation.

Features

- 310 ps Typical Propagation Delay
- Maximum Frequency > 3 GHz Typical
- PECL Mode Operating Range: V_{CC} = 3.0 V to 5.5 V with V_{EE} = 0 V
- NECL Mode Operating Range: V_{CC} = 0 V with V_{EE} = −3.0 V to −5.5 V
- Open Input Default State
- Q Output Will Default LOW with Inputs Open or at V_{EE}
- Pb−Free Packages are Available

ON Semiconductor®

http://onsemi.com

MARKING DIAGRAMS*



SOIC−8
D SUFFIX
CASE 751

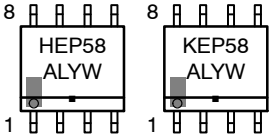



TSSOP−8
DT SUFFIX
CASE 948R

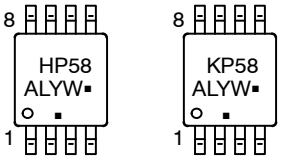

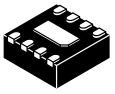

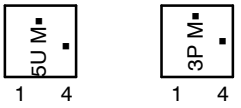

DFN8
MN SUFFIX
CASE 506AA

H	= MC10	A	= Assembly Location
K	= MC100	L	= Wafer Lot
5U	= MC10	Y	= Year
3P	= MC100	W	= Work Week
M	= Date Code	▪	= Pb−Free Package

(Note: Microdot may be in either location)

*For additional marking information, refer to Application Note AND8002/D.

ORDERING INFORMATION

See detailed ordering and shipping information in the package dimensions section on page 8 of this data sheet.

© Semiconductor Components Industries, LLC, 2008

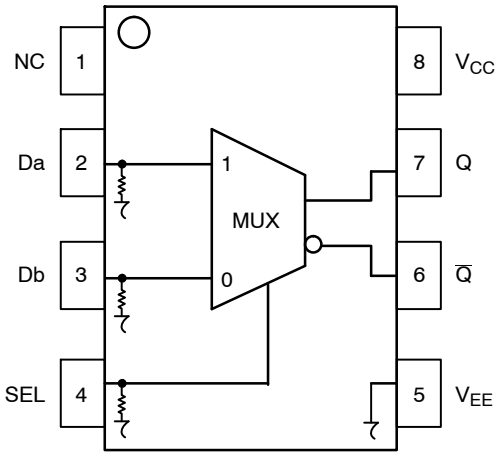

Figure 1. 8−Lead Pinout (Top View) **and Logic Diagram**

Table 1. PIN DESCRIPTION

PIN	FUNCTION
Da*, Db*	ECL Data Inputs
SEL*	ECL Select Inputs
Q, $\overline{Q}$	ECL Data Outputs
V_{CC}	Positive Supply
V_{EE}	Negative Supply
NC	No Connect
EP	(DFN8 only) Thermal exposed pad must be connected to a sufficient thermal conduit. Electrically connect to the most negative supply (GND) or leave unconnected, floating open.

* Pins will default LOW when left open.

Table 2. TRUTH TABLE

SEL	Data
H	a
L	b

Table 3. ATTRIBUTES

Characteristics		Value	
Internal Input Pulldown Resistor		75 kΩ	
Internal Input Pullup Resistor		N/A	
ESD Protection	Human Body Model Machine Model Charged Device Model	> 4 kV > 200 V > 2 kV	
Moisture Sensitivity, Indefinite Time Out of Drypack (Note 1)		Pb Pkg	Pb−Free Pkg
	SOIC−8 TSSOP−8 DFN8	Level 1 Level 1 Level 1	Level 1 Level 3 Level 1
Flammability Rating	Oxygen Index: 28 to 34	UL 94 V−0 @ 0.125 in	
Transistor Count		41 Devices	
Meets or exceeds JEDEC Spec EIA/JESD78 IC Latchup Test			

1. For additional information, see Application Note AND8003/D.

Table 4. MAXIMUM RATINGS

Symbol	Parameter	Condition 1	Condition 2	Rating	Unit
V_{CC}	PECL Mode Power Supply	V_{EE} = 0 V		6	V
V_{EE}	NECL Mode Power Supply	V_{CC} = 0 V		−6	V
V_I	PECL Mode Input Voltage NECL Mode Input Voltage	V_{EE} = 0 V V_{CC} = 0 V	$V_I \leq V_{CC}$ $V_I \geq V_{EE}$	6 −6	V V
I_{out}	Output Current	Continuous Surge		50 100	mA mA
I_{BB}	V_{BB} Sink/Source			± 0.5	mA
T_A	Operating Temperature Range			−40 to +85	°C
T_{stg}	Storage Temperature Range			−65 to +150	°C
θ_{JA}	Thermal Resistance (Junction−to−Ambient)	0 lfpm 500 lfpm	8 SOIC 8 SOIC	190 130	°C/W °C/W
θ_{JC}	Thermal Resistance (Junction−to−Case)	Standard Board	8 SOIC	41 to 44	°C/W
θ_{JA}	Thermal Resistance (Junction−to−Ambient)	0 lfpm 500 lfpm	8 TSSOP 8 TSSOP	185 140	°C/W °C/W
θ_{JC}	Thermal Resistance (Junction−to−Case)	Standard Board	8 TSSOP	41 to 44	°C/W
θ_{JA}	Thermal Resistance (Junction−to−Ambient)	0 lfpm 500 lfpm	DFN8 DFN8	129 84	°C/W °C/W
T_{sol}	Wave Solder Pb Pb−Free	<2 to 3 sec @ 248°C <2 to 3 sec @ 260°C		265 265	°C
θ_{JC}	Thermal Resistance (Junction−to−Case)	(Note 2)	DFN8	35 to 40	°C/W

Stresses exceeding Maximum Ratings may damage the device. Maximum Ratings are stress ratings only. Functional operation above the Recommended Operating Conditions is not implied. Extended exposure to stresses above the Recommended Operating Conditions may affect device reliability.

2. JEDEC standard multilayer board − 2S2P (2 signal, 2 power)

Table 5. 10EP DC CHARACTERISTICS, PECL V_{CC} = 3.3 V, V_{EE} = 0 V (Note 3)

Symbol	Characteristic	−40°C			25°C			85°C			Unit
		Min	Typ	Max	Min	Typ	Max	Min	Typ	Max	
I_{EE}	Power Supply Current	20	28	37	20	30	39	22	31	40	mA
V_{OH}	Output HIGH Voltage (Note 4)	2165	2290	2415	2230	2355	2480	2290	2415	2540	mV
V_{OL}	Output LOW Voltage (Note 4)	1365	1490	1615	1430	1555	1680	1490	1615	1740	mV
V_{IH}	Input HIGH Voltage (Single−Ended)	2090		2415	2155		2480	2215		2540	mV
V_{IL}	Input LOW Voltage (Single−Ended)	1365		1690	1460		1755	1490		1815	mV
I_{IH}	Input HIGH Current			150			150			150	μA
I_{IL}	Input LOW Current	0.5			0.5			0.5			μA

NOTE: Device will meet the specifications after thermal equilibrium has been established when mounted in a test socket or printed circuit board with maintained transverse airflow greater than 500 lfpm. Electrical parameters are guaranteed only over the declared operating temperature range. Functional operation of the device exceeding these conditions is not implied. Device specification limit values are applied individually under normal operating conditions and not valid simultaneously.

3. Input and output parameters vary 1:1 with V_{CC}. V_{EE} can vary +0.3 V to −2.2 V.
4. All loading with 50 Ω to V_{CC} − 2.0 V.

Table 6. 10EP DC CHARACTERISTICS, PECL V_{CC} = 5.0 V, V_{EE} = 0 V (Note 5)

Symbol	Characteristic	−40°C			25°C			85°C			Unit
		Min	Typ	Max	Min	Typ	Max	Min	Typ	Max	
I_{EE}	Power Supply Current	20	28	37	20	30	39	22	31	40	mA
V_{OH}	Output HIGH Voltage (Note 6)	3865	3990	4115	3930	4055	4180	3990	4115	4240	mV
V_{OL}	Output LOW Voltage (Note 6)	3065	3190	3315	3130	3255	3380	3190	3315	3440	mV
V_{IH}	Input HIGH Voltage (Single−Ended)	3790		4115	3855		4180	3915		4240	mV
V_{IL}	Input LOW Voltage (Single−Ended)	3065		3390	3130		3455	3190		3515	mV
I_{IH}	Input HIGH Current			150			150			150	μA
I_{IL}	Input LOW Current	0.5			0.5			0.5			μA

NOTE: Device will meet the specifications after thermal equilibrium has been established when mounted in a test socket or printed circuit board with maintained transverse airflow greater than 500 lfpm. Electrical parameters are guaranteed only over the declared operating temperature range. Functional operation of the device exceeding these conditions is not implied. Device specification limit values are applied individually under normal operating conditions and not valid simultaneously.

5. Input and output parameters vary 1:1 with V_{CC}. V_{EE} can vary +2.0 V to −0.5 V.
6. All loading with 50 Ω to V_{CC} − 2.0 V.

Table 7. 10EP DC CHARACTERISTICS, NECL V_{CC} = 0 V, V_{EE} = −5.5 V to −3.0 V (Note 7)

Symbol	Characteristic	−40°C			25°C			85°C			Unit
		Min	Typ	Max	Min	Typ	Max	Min	Typ	Max	
I_{EE}	Power Supply Current	20	28	37	20	30	39	22	31	40	mA
V_{OH}	Output HIGH Voltage (Note 8)	−1135	−1010	−885	−1070	−945	−820	−1010	−885	−760	mV
V_{OL}	Output LOW Voltage (Note 8)	−1935	−1810	−1685	−1870	−1745	−1620	−1810	−1685	−1560	mV
V_{IH}	Input HIGH Voltage (Single−Ended)	−1210		−885	−1145		−820	−1085		−760	mV
V_{IL}	Input LOW Voltage (Single−Ended)	−1935		−1610	−1870		−1545	−1810		−1485	mV
I_{IH}	Input HIGH Current			150			150			150	μA
I_{IL}	Input LOW Current	0.5			0.5			0.5			μA

NOTE: Device will meet the specifications after thermal equilibrium has been established when mounted in a test socket or printed circuit board with maintained transverse airflow greater than 500 lfpm. Electrical parameters are guaranteed only over the declared operating temperature range. Functional operation of the device exceeding these conditions is not implied. Device specification limit values are applied individually under normal operating conditions and not valid simultaneously.

7. Input and output parameters vary 1:1 with V_{CC}.
8. All loading with 50 Ω to V_{CC} − 2.0 V.

Table 8. 100EP DC CHARACTERISTICS, PECL V_{CC} = 3.3 V, V_{EE} = 0 V (Note 9)

Symbol	Characteristic	−40°C			25°C			85°C			Unit
		Min	Typ	Max	Min	Typ	Max	Min	Typ	Max	
I_{EE}	Power Supply Current	20	28	37	20	31	39	25	33	42	mA
V_{OH}	Output HIGH Voltage (Note 10)	2155	2280	2405	2155	2280	2405	2155	2280	2405	mV
V_{OL}	Output LOW Voltage (Note 10)	1355	1480	1605	1355	1480	1605	1355	1480	1605	mV
V_{IH}	Input HIGH Voltage (Single−Ended)	2075		2420	2075		2420	2075		2420	mV
V_{IL}	Input LOW Voltage (Single−Ended)	1355		1675	1355		1675	1355		1675	mV
I_{IH}	Input HIGH Current			150			150			150	μA
I_{IL}	Input LOW Current	0.5			0.5			0.5			μA

NOTE: Device will meet the specifications after thermal equilibrium has been established when mounted in a test socket or printed circuit board with maintained transverse airflow greater than 500 lfpm. Electrical parameters are guaranteed only over the declared operating temperature range. Functional operation of the device exceeding these conditions is not implied. Device specification limit values are applied individually under normal operating conditions and not valid simultaneously.

9. Input and output parameters vary 1:1 with V_{CC}. V_{EE} can vary +0.3 V to −2.2 V.
10. All loading with 50 Ω to V_{CC} − 2.0 V.

Table 9. 100EP DC CHARACTERISTICS, PECL V_{CC} = 5.0 V, V_{EE} = 0 V (Note 11)

Symbol	Characteristic	−40°C			25°C			85°C			Unit
		Min	Typ	Max	Min	Typ	Max	Min	Typ	Max	
I_{EE}	Power Supply Current	20	28	37	20	31	39	25	33	42	mA
V_{OH}	Output HIGH Voltage (Note 12)	3855	3980	4105	3855	3980	4105	3855	3980	4105	mV
V_{OL}	Output LOW Voltage (Note 12)	3055	3180	3305	3055	3180	3305	3055	3180	3305	mV
V_{IH}	Input HIGH Voltage (Single−Ended)	3775		4120	3775		4120	3775		4120	mV
V_{IL}	Input LOW Voltage (Single−Ended)	3055		3375	3055		3375	3055		3375	mV
I_{IH}	Input HIGH Current			150			150			150	μA
I_{IL}	Input LOW Current	0.5			0.5			0.5			μA

NOTE: Device will meet the specifications after thermal equilibrium has been established when mounted in a test socket or printed circuit board with maintained transverse airflow greater than 500 lfpm. Electrical parameters are guaranteed only over the declared operating temperature range. Functional operation of the device exceeding these conditions is not implied. Device specification limit values are applied individually under normal operating conditions and not valid simultaneously.

11. Input and output parameters vary 1:1 with V_{CC}. V_{EE} can vary +2.0 V to −0.5 V.
12. All loading with 50 Ω to V_{CC} − 2.0 V.

Table 10. 100EP DC CHARACTERISTICS, NECL V_{CC} = 0 V, V_{EE} = −5.5 V to −3.0 V (Note 13)

		−40°C			25°C			85°C			
Symbol	**Characteristic**	**Min**	**Typ**	**Max**	**Min**	**Typ**	**Max**	**Min**	**Typ**	**Max**	**Unit**
I_{EE}	Power Supply Current	20	28	37	20	31	39	25	33	42	mA
V_{OH}	Output HIGH Voltage (Note 14)	−1145	−1020	−895	−1145	−1020	−895	−1145	−1020	−895	mV
V_{OL}	Output LOW Voltage (Note 14)	−1945	−1820	−1695	−1945	−1820	−1695	−1945	−1820	−1695	mV
V_{IH}	Input HIGH Voltage (Single−Ended)	−1225		−880	−1225		−880	−1225		−880	mV
V_{IL}	Input LOW Voltage (Single−Ended)	−1945		−1625	−1945		−1625	−1945		−1625	mV
I_{IH}	Input HIGH Current			150			150			150	μA
I_{IL}	Input LOW Current	0.5			0.5			0.5			μA

NOTE: Device will meet the specifications after thermal equilibrium has been established when mounted in a test socket or printed circuit board with maintained transverse airflow greater than 500 lfpm. Electrical parameters are guaranteed only over the declared operating temperature range. Functional operation of the device exceeding these conditions is not implied. Device specification limit values are applied individually under normal operating conditions and not valid simultaneously.

13. Input and output parameters vary 1:1 with V_{CC}.
14. All loading with 50 Ω to V_{CC} − 2.0 V.

Table 11. AC CHARACTERISTICS V_{CC} = 0 V; V_{EE} = −3.0 V to −5.5 V or V_{CC} = 3.0 V to 5.5 V; V_{EE} = 0 V (Note 15)

		−40°C			25°C			85°C			
Symbol	**Characteristic**	**Min**	**Typ**	**Max**	**Min**	**Typ**	**Max**	**Min**	**Typ**	**Max**	**Unit**
f_{max}	Maximum Frequency (See Figure 2. F_{max}/JITTER)		> 3			> 3			> 3		GHz
t_{PLH}, t_{PHL}	Propagation Delay to Output Differential D to Q,$\overline{Q}$ SEL to Q,$\overline{Q}$	200	280	380	210	310	410	220	340	420	ps
t_{JITTER}	Cycle−to−Cycle Jitter (See Figure 2. F_{max}/JITTER)		0.2	< 2		0.2	< 2		0.2	< 2	ps
V_{PP}	Input Voltage Swing (Differential Configuration)	150	800	1200	150	800	1200	150	800	1200	mV
t_r t_f	Output Rise/Fall Times (20% − 80%) Q, $\overline{Q}$	70	120	170	80	130	180	100	150	200	ps

NOTE: Device will meet the specifications after thermal equilibrium has been established when mounted in a test socket or printed circuit board with maintained transverse airflow greater than 500 lfpm. Electrical parameters are guaranteed only over the declared operating temperature range. Functional operation of the device exceeding these conditions is not implied. Device specification limit values are applied individually under normal operating conditions and not valid simultaneously.

15. Measured using a 750 mV source, 50% duty cycle clock source. All loading with 50 Ω to V_{CC} − 2.0 V.

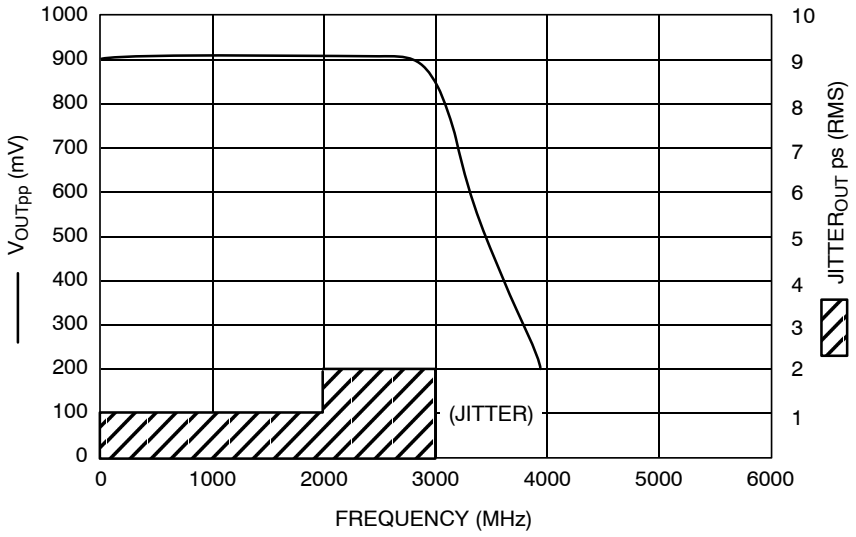

Figure 2. F_{max}/Jitter

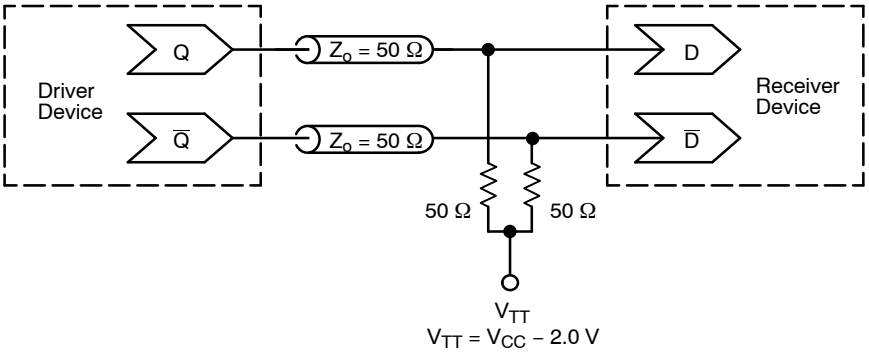

Figure 3. Typical Termination for Output Driver and Device Evaluation (See Application Note AND8020/D – Termination of ECL Logic Devices.)

ORDERING INFORMATION

Device	Package	Shipping†
MC10EP58D	SOIC−8	98 Units / Rail
MC10EP58DG	SOIC−8 (Pb−Free)	98 Units / Rail
MC10EP58DR2	SOIC−8	2500 / Tape & Reel
MC10EP58DR2G	SOIC−8 (Pb−Free)	2500 / Tape & Reel
MC10EP58DT	TSSOP−8	100 Units / Rail
MC10EP58DTG	TSSOP−8 (Pb−Free)	100 Units / Rail
MC10EP58DTR2	TSSOP−8	2500 / Tape & Reel
MC10EP58DTR2G	TSSOP−8 (Pb−Free)	2500 / Tape & Reel
MC10EP58MNR4	DFN8	1000 / Tape & Reel
MC10EP58MNR4G	DFN8 (Pb−Free)	1000 / Tape & Reel
MC100EP58D	SOIC−8	98 Units / Rail
MC100EP58DG	SOIC−8 (Pb−Free)	98 Units / Rail
MC100EP58DR2	SOIC−8	2500 / Tape & Reel
MC100EP58DR2G	SOIC−8 (Pb−Free)	2500 / Tape & Reel
MC100EP58DT	TSSOP−8	100 Units / Rail
MC100EP58DTG	TSSOP−8 (Pb−Free)	100 Units / Rail
MC100EP58DTR2	TSSOP−8	2500 / Tape & Reel
MC100EP58DTR2G	TSSOP−8 (Pb−Free)	2500 / Tape & Reel
MC100EP58MNR4	DFN8	1000 / Tape & Reel
MC100EP58MNR4G	DFN8 (Pb−Free)	1000 / Tape & Reel

†For information on tape and reel specifications, including part orientation and tape sizes, please refer to our Tape and Reel Packaging Specifications Brochure, BRD8011/D.

Resource Reference of Application Notes

AN1405/D – ECL Clock Distribution Techniques

AN1406/D – Designing with PECL (ECL at +5.0 V)

AN1503/D – ECLinPS™ I/O SPiCE Modeling Kit

AN1504/D – Metastability and the ECLinPS Family

AN1568/D – Interfacing Between LVDS and ECL

AN1672/D – The ECL Translator Guide

AND8001/D – Odd Number Counters Design

AND8002/D – Marking and Date Codes

AND8020/D – Termination of ECL Logic Devices

AND8066/D – Interfacing with ECLinPS

AND8090/D – AC Characteristics of ECL Devices

PACKAGE DIMENSIONS

SOIC−8 NB
CASE 751−07
ISSUE AH

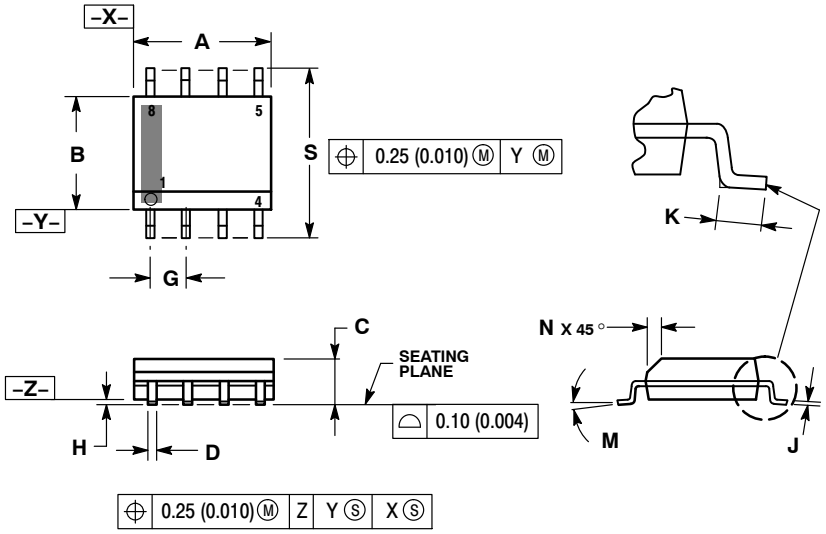

NOTES:
1. DIMENSIONING AND TOLERANCING PER ANSI Y14.5M, 1982.
2. CONTROLLING DIMENSION: MILLIMETER.
3. DIMENSION A AND B DO NOT INCLUDE MOLD PROTRUSION.
4. MAXIMUM MOLD PROTRUSION 0.15 (0.006) PER SIDE.
5. DIMENSION D DOES NOT INCLUDE DAMBAR PROTRUSION. ALLOWABLE DAMBAR PROTRUSION SHALL BE 0.127 (0.005) TOTAL IN EXCESS OF THE D DIMENSION AT MAXIMUM MATERIAL CONDITION.
6. 751−01 THRU 751−06 ARE OBSOLETE. NEW STANDARD IS 751−07.

	MILLIMETERS		INCHES	
DIM	MIN	MAX	MIN	MAX
A	4.80	5.00	0.189	0.197
B	3.80	4.00	0.150	0.157
C	1.35	1.75	0.053	0.069
D	0.33	0.51	0.013	0.020
G	1.27 BSC		0.050 BSC	
H	0.10	0.25	0.004	0.010
J	0.19	0.25	0.007	0.010
K	0.40	1.27	0.016	0.050
M	0 °	8 °	0 °	8 °
N	0.25	0.50	0.010	0.020
S	5.80	6.20	0.228	0.244

SOLDERING FOOTPRINT*

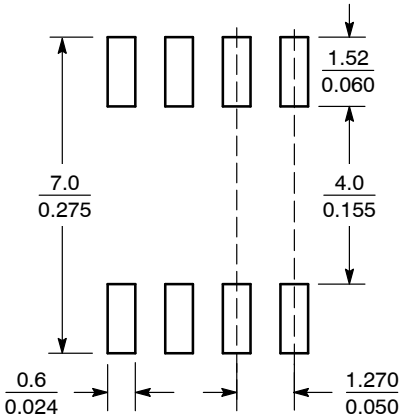

SCALE 6:1 (mm / inches)

*For additional information on our Pb−Free strategy and soldering details, please download the ON Semiconductor Soldering and Mounting Techniques Reference Manual, SOLDERRM/D.

PACKAGE DIMENSIONS

TSSOP−8
DT SUFFIX
PLASTIC TSSOP PACKAGE
CASE 948R−02
ISSUE A

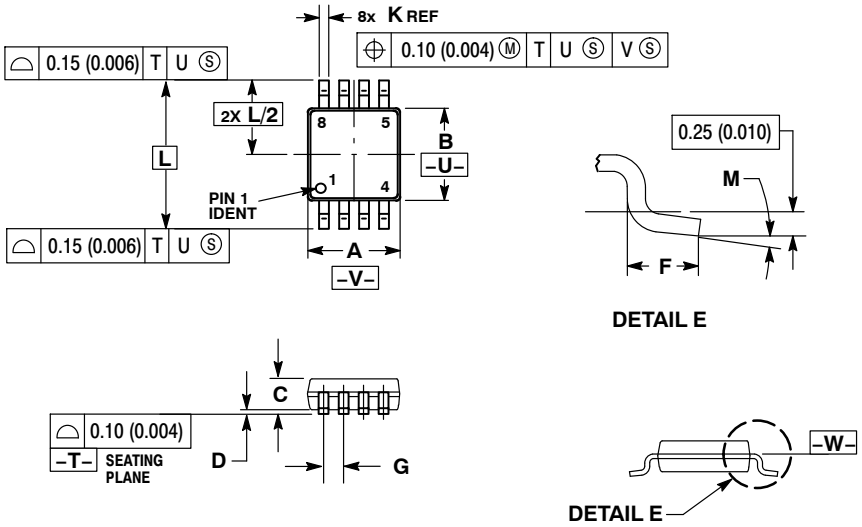

NOTES:
1. DIMENSIONING AND TOLERANCING PER ANSI Y14.5M, 1982.
2. CONTROLLING DIMENSION: MILLIMETER.
3. DIMENSION A DOES NOT INCLUDE MOLD FLASH. PROTRUSIONS OR GATE BURRS. MOLD FLASH OR GATE BURRS SHALL NOT EXCEED 0.15 (0.006) PER SIDE.
4. DIMENSION B DOES NOT INCLUDE INTERLEAD FLASH OR PROTRUSION. INTERLEAD FLASH OR PROTRUSION SHALL NOT EXCEED 0.25 (0.010) PER SIDE.
5. TERMINAL NUMBERS ARE SHOWN FOR REFERENCE ONLY.
6. DIMENSION A AND B ARE TO BE DETERMINED AT DATUM PLANE −W−.

	MILLIMETERS		INCHES	
DIM	MIN	MAX	MIN	MAX
A	2.90	3.10	0.114	0.122
B	2.90	3.10	0.114	0.122
C	0.80	1.10	0.031	0.043
D	0.05	0.15	0.002	0.006
F	0.40	0.70	0.016	0.028
G	0.65 BSC		0.026 BSC	
K	0.25	0.40	0.010	0.016
L	4.90 BSC		0.193 BSC	
M	0°	6°	0°	6°

PACKAGE DIMENSIONS

DFN8
CASE 506AA−01
ISSUE D

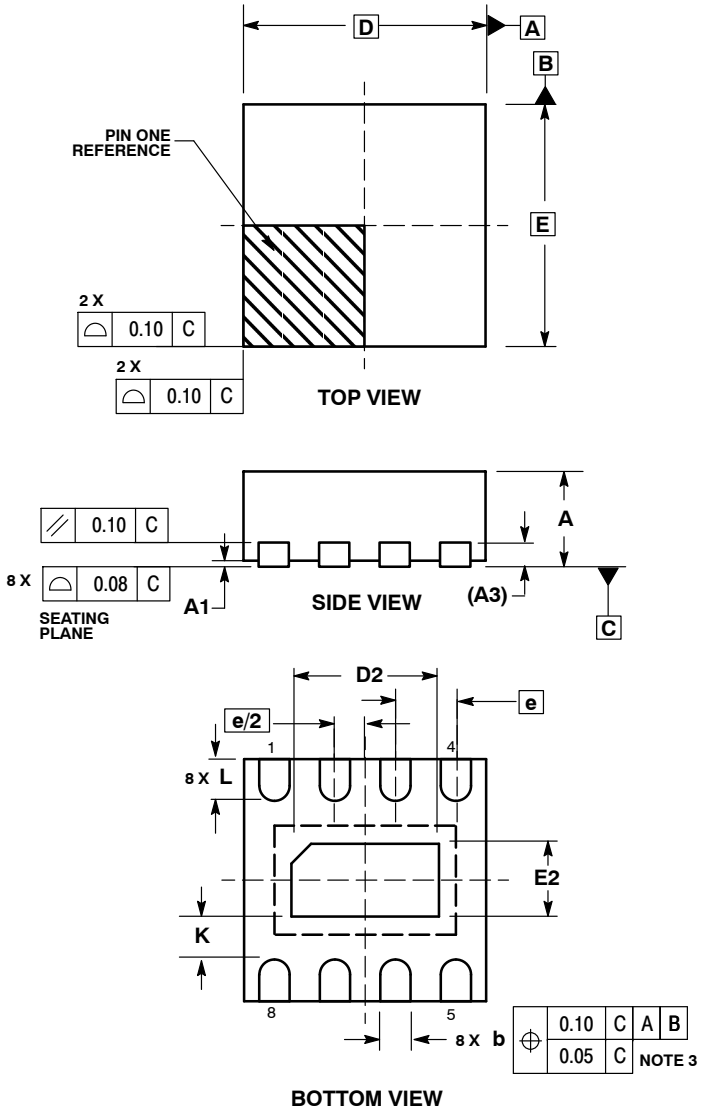

NOTES:
1. DIMENSIONING AND TOLERANCING PER ASME Y14.5M, 1994 .
2. CONTROLLING DIMENSION: MILLIMETERS.
3. DIMENSION b APPLIES TO PLATED TERMINAL AND IS MEASURED BETWEEN 0.25 AND 0.30 MM FROM TERMINAL.
4. COPLANARITY APPLIES TO THE EXPOSED PAD AS WELL AS THE TERMINALS.

	MILLIMETERS	
DIM	MIN	MAX
A	0.80	1.00
A1	0.00	0.05
A3	0.20 REF	
b	0.20	0.30
D	2.00 BSC	
D2	1.10	1.30
E	2.00 BSC	
E2	0.70	0.90
e	0.50 BSC	
K	0.20	−−−
L	0.25	0.35

ECLinPS is a trademark of Semiconductor Components Industries, LLC (SCILLC).

ON Semiconductor and ON are registered trademarks of Semiconductor Components Industries, LLC (SCILLC). SCILLC reserves the right to make changes without further notice to any products herein. SCILLC makes no warranty, representation or guarantee regarding the suitability of its products for any particular purpose, nor does SCILLC assume any liability arising out of the application or use of any product or circuit, and specifically disclaims any and all liability, including without limitation special, consequential or incidental damages. “Typical” parameters which may be provided in SCILLC data sheets and/or specifications can and do vary in different applications and actual performance may vary over time. All operating parameters, including “Typicals” must be validated for each customer application by customer’s technical experts. SCILLC does not convey any license under its patent rights nor the rights of others. SCILLC products are not designed, intended, or authorized for use as components in systems intended for surgical implant into the body, or other applications intended to support or sustain life, or for any other application in which the failure of the SCILLC product could create a situation where personal injury or death may occur. Should Buyer purchase or use SCILLC products for any such unintended or unauthorized application, Buyer shall indemnify and hold SCILLC and its officers, employees, subsidiaries, affiliates, and distributors harmless against all claims, costs, damages, and expenses, and reasonable attorney fees arising out of, directly or indirectly, any claim of personal injury or death associated with such unintended or unauthorized use, even if such claim alleges that SCILLC was negligent regarding the design or manufacture of the part. SCILLC is an Equal Opportunity/Affirmative Action Employer. This literature is subject to all applicable copyright laws and is not for resale in any manner.

PUBLICATION ORDERING INFORMATION

LITERATURE FULFILLMENT:
Literature Distribution Center for ON Semiconductor
P.O. Box 5163, Denver, Colorado 80217 USA
Phone: 303−675−2175 or 800−344−3860 Toll Free USA/Canada
Fax: 303−675−2176 or 800−344−3867 Toll Free USA/Canada
Email: orderlit@onsemi.com

N. American Technical Support: 800−282−9855 Toll Free USA/Canada
Europe, Middle East and Africa Technical Support:
Phone: 421 33 790 2910
Japan Customer Focus Center
Phone: 81−3−5773−3850

ON Semiconductor Website: **www.onsemi.com**

Order Literature: http://www.onsemi.com/orderlit

For additional information, please contact your local Sales Representative