# MC100LVEL92

# 5 V Triple PECL Input to LVPECL Output Translator

### Description

The MC100LVEL92 is a triple PECL input to LVPECL output translator. The device receives standard PECL signals and translates them to differential LVPECL output signals.

To accomplish the PECL to LVPECL level translation, the MC100LVEL92 requires three power rails. The $V_{CC}$ supply is to be connected to the standard 5 V PECL supply, the $LV_{CC}$ supply is to be connected to the 3.3 V LVPECL supply, and Ground is connected to the system ground plane. Both the $V_{CC}$ and $LV_{CC}$ should be bypassed to ground with 0.01 μF capacitors.

The PECL $V_{BB}$ pin, an internally generated voltage supply, is available to this device only. For single-ended input conditions, the unused differential input is connected to $V_{BB}$ as a switching reference voltage. $V_{BB}$ may also rebias AC coupled inputs. When used, decouple $V_{BB}$ and $V_{CC}$ via a 0.01 μF capacitor and limit current sourcing or sinking to 0.5 mA. When not used, $V_{BB}$ should be left open.

### Features

- 500 ps Propagation Delays
- 5 V and 3.3 V Supplies Required
- ESD Protection: Human Body Model; > 2 kV, Machine Model; > 200 V
- The 100 Series Contains Temperature Compensation
- LVPECL Operating Range: $LV_{CC}$ = 3.0 V to 3.8 V
- PECL Operating Range: $V_{CC}$ = 4.5 V to 5.5 V
- Internal Input Pulldown Resistors
- Q Output will Default LOW with Inputs Open or < GND + 1.3 V
- Meets or Exceeds JEDEC Spec EIA/JESD78 IC Latchup Test
- Moisture Sensitivity: Level 3 (Pb−Free) For Additional Information, see Application Note AND8003/D
- Flammability Rating: UL 94 V−0 @ 0.125 in, Oxygen Index 28 to 34
- Transistor Count = 247 devices
- These Devices are Pb-Free, Halogen Free and are RoHS Compliant

**ON Semiconductor®**

www.onsemi.com

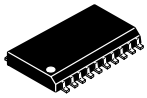

**SOIC−20 WB**
**DW SUFFIX**
**CASE 751D**

### MARKING DIAGRAM*

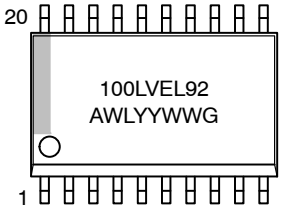


| | |
|---|---|
| A | = Assembly Location |
| WL | = Wafer Lot |
| YY | = Year |
| WW | = Work Week |
| G | = Pb-Free Package |

*For additional marking information, refer to Application Note AND8002/D.

### ORDERING INFORMATION

| Device | Package | Shipping† |
|---|---|---|
| MC100LVEL92DWG | SOIC−20 WB (Pb-Free) | 38 Units/Tube |
| MC100LVEL92DWR2G | SOIC−20 WB (Pb-Free) | 1000/Tape & Reel |

†For information on tape and reel specifications, including part orientation and tape sizes, please refer to our Tape and Reel Packaging Specifications Brochure, BRD8011/D.

© Semiconductor Components Industries, LLC, 2016

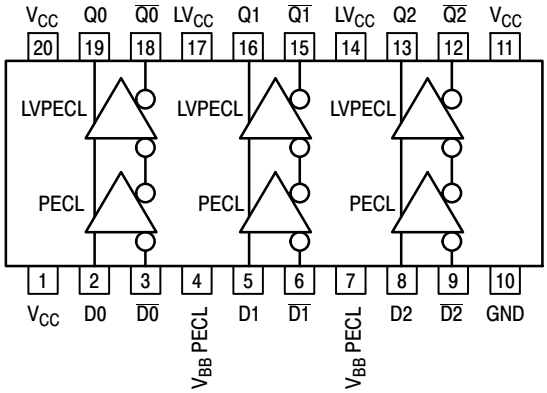


Warning: All $V_{CC}$, $LV_{CC}$, and GND pins must be externally connected to Power Supply to guarantee proper operation.

**Figure 1. Logic Diagram and Pinout: SO−20 WB** (Top View)

**Table 1. PIN DESCRIPTION**

| PIN | FUNCTION |
|---|---|
| Dn, $\overline{Dn}$ | PECL Inputs |
| Qn, $\overline{Qn}$ | LVPECL Outputs |
| PECL $V_{BB}$ | PECL Reference Voltage Output |
| $LV_{CC}$ | LVPECL Power Supply |
| $V_{CC}$ | PECL Power Supply |
| GND | Common Ground Rail |

**Table 2. MAXIMUM RATINGS**

| Symbol | Parameter | Condition 1 | Condition 2 | Rating | Unit |
|---|---|---|---|---|---|
| $V_{CC}$ | PECL Power Supply | GND = 0 V | | 8 to 0 | V |
| $LV_{CC}$ | LVPECL Power Supply | GND = 0 V | | 8 to 0 | V |
| $V_I$ | PECL Input Voltage | GND = 0 V | $V_I \le V_{CC}$ | 6 to 0 | V |
| $I_{out}$ | Output Current | Continuous<br>Surge | | 50<br>100 | mA |
| $I_{BB}$ | PECL $V_{BB}$ Sink/Source | | | ± 0.5 | mA |
| $T_A$ | Operating Temperature Range | | | −40 to +85 | °C |
| $T_{stg}$ | Storage Temperature Range | | | −65 to +150 | °C |
| $\theta_{JA}$ | Thermal Resistance (Junction-to-Ambient) | 0 lfpm<br>500 lfpm | SOIC−20 WB | 90<br>60 | °C/W |
| $\theta_{JC}$ | Thermal Resistance (Junction-to-Case) | Standard Board | SOIC−20 WB | 30 to 35 | °C/W |
| $T_{sol}$ | Wave Solder (Pb-Free) | < 2 to 3 sec @ 260°C | | 265 | °C |

Stresses exceeding those listed in the Maximum Ratings table may damage the device. If any of these limits are exceeded, device functionality should not be assumed, damage may occur and reliability may be affected.

**Table 3. PECL INPUT DC CHARACTERISTICS** ($V_{CC}$ = 5.0 V; $LV_{CC}$ = 3.3 V; GND = 0 V Note 1))

| Symbol | Characteristic | −40°C | | | 25°C | | | 85°C | | | Unit |
|---|---|---|---|---|---|---|---|---|---|---|---|
| | | Min | Typ | Max | Min | Typ | Max | Min | Typ | Max | |
| $IV_{CC}$ | PECL Power Supply Current | | | 12 | | | 12 | | | 12 | mA |
| $V_{IH}$ | Input HIGH Voltage (Single-Ended) | 3835 | | 4120 | 3835 | | 4120 | 3835 | | 4120 | mV |
| $V_{IL}$ | Input LOW Voltage (Single-Ended) | 3190 | | 3515 | 3190 | | 3525 | 3190 | | 3525 | mV |
| PECL $V_{BB}$ | Output Voltage Reference | 3.62 | | 3.74 | 3.62 | | 3.74 | 3.62 | | 3.74 | V |
| $V_{IHCMR}$ | Input HIGH Voltage Common Mode Range (DIfferential) (Note 2)<br>$V_{pp}$ < 500 mV<br>$V_{pp}$ ≥ 500 mV | <br>1.3<br>1.5 | | <br>4.8<br>4.8 | <br>1.2<br>1.4 | | <br>4.8<br>4.8 | <br>1.2<br>1.4 | | <br>4.8<br>4.8 | V |
| $I_{IH}$ | Input HIGH Current | | | 150 | | | 150 | | | 150 | μA |
| $I_{IL}$ | Input LOW Current<br>D<br>$\overline{D}$ | <br>0.5<br>−600 | | | <br>0.5<br>−600 | | | <br>0.5<br>−600 | | | μA |

NOTE: Device will meet the specifications after thermal equilibrium has been established when mounted in a test socket or printed circuit board with maintained transverse airflow greater than 500 lfpm. Electrical parameters are guaranteed only over the declared operating temperature range. Functional operation of the device exceeding these conditions is not implied. Device specification limit values are applied individually under normal operating conditions and not valid simultaneously.

1. Input parameters vary 1:1 with $V_{CC}$. $V_{CC}$ can vary 4.5 V to 5.5 V.
2. $V_{IHCMR}$ min varies 1:1 with GND. $V_{IHCMR}$ max varies 1:1 with $V_{CC}$. The $V_{IHCMR}$ range is referenced to the most positive side of the differential input signal. Normal operation is obtained if the HIGH level falls within the specified range and the peak-to-peak voltage lies between $V_{PP}$min and 1.0 V.

**Table 4. LVPECL OUTPUT DC CHARACTERISTICS** ($V_{CC}$ = 5.0 V; $LV_{CC}$ = 3.3 V; GND = 0 V (Note 1))

| Symbol | Characteristic | −40°C | | | 25°C | | | 85°C | | | Unit |
|---|---|---|---|---|---|---|---|---|---|---|---|
| | | Min | Typ | Max | Min | Typ | Max | Min | Typ | Max | |
| $ILV_{CC}$ | LVPECL Power Supply Current | | | 20 | | | 20 | | | 21 | mA |
| $V_{OH}$ | Output HIGH Voltage (Note 2) | 2215 | 2295 | 2420 | 2275 | 2345 | 2420 | 2275 | 2345 | 2420 | mV |
| $V_{OL}$ | Output LOW Voltage (Note 2) | 1470 | 1605 | 1745 | 1490 | 1595 | 1680 | 1490 | 1595 | 1680 | mV |

NOTE: Device will meet the specifications after thermal equilibrium has been established when mounted in a test socket or printed circuit board with maintained transverse airflow greater than 500 lfpm. Electrical parameters are guaranteed only over the declared operating temperature range. Functional operation of the device exceeding these conditions is not implied. Device specification limit values are applied individually under normal operating conditions and not valid simultaneously.

1. Output parameters vary 1:1 with $LV_{CC}$. $V_{CC}$ can vary 3.0 V to 3.8 V.
2. Outputs are terminated through a 50 Ω resistor to $LV_{CC}$ − 2.0 V.

**Table 5. AC CHARACTERISTICS** ($V_{CC}$ = 5.0 V; $LV_{CC}$ = 3.3 V; GND = 0 V (Note 1))

| Symbol | Characteristic | −40°C | | | 25°C | | | 85°C | | | Unit |
|---|---|---|---|---|---|---|---|---|---|---|---|
| | | Min | Typ | Max | Min | Typ | Max | Min | Typ | Max | |
| $f_{max}$ | Maximum Toggle Frequency | | TBD | | | TBD | | | TBD | | GHz |
| $t_{PLH}$<br>$t_{PHL}$ | Propagation Delay<br>Diff<br>D to Q<br>S.E. | 490<br><br>440 | 590<br><br>590 | 690<br><br>740 | 510<br><br>460 | 610<br><br>610 | 710<br><br>760 | 530<br><br>480 | 630<br><br>630 | 730<br><br>780 | ps |
| $t_{SKEW}$ | Skew<br>Output-to-Output (Note 2)<br>Part-to-Part (Diff) (Note 2)<br>Duty Cycle (Diff) (Note 3) | | <br>20<br>20<br>25 | <br>100<br>200 | | <br>20<br>20<br>25 | <br>100<br>200 | | <br>20<br>20<br>25 | <br>100<br>200 | ps |
| $t_{JITTER}$ | Cycle-to-Cycle Jitter | | TBD | | | TBD | | | TBD | | ps |
| $V_{PP}$ | Input Swing (Note 4) | 150 | | 1000 | 150 | | 1000 | 150 | | 1000 | mV |
| $t_r$<br>$t_f$ | Output Rise/Fall Times Q<br>(20% − 80%) | 270 | | 530 | 270 | | 530 | 270 | | 530 | ps |

NOTE: Device will meet the specifications after thermal equilibrium has been established when mounted in a test socket or printed circuit board with maintained transverse airflow greater than 500 lfpm. Electrical parameters are guaranteed only over the declared operating temperature range. Functional operation of the device exceeding these conditions is not implied. Device specification limit values are applied individually under normal operating conditions and not valid simultaneously.

1. $LV_{CC}$ can vary 3.0 V to 3.8 V; $V_{CC}$ can vary 4.5 V to 5.5 V. Outputs are terminated through a 50 Ω resistor to $LV_{CC}$ − 2.0 V.
2. Skews are valid across specified voltage range, part-to-part skew is for a given temperature.
3. Duty cycle skew is the difference between a $t_{PLH}$ and $t_{PHL}$ propagation delay through a device.
4. $V_{PP}$(min) is the minimum input swing for which AC parameters are guaranteed. The device has a DC gain of ≈40.

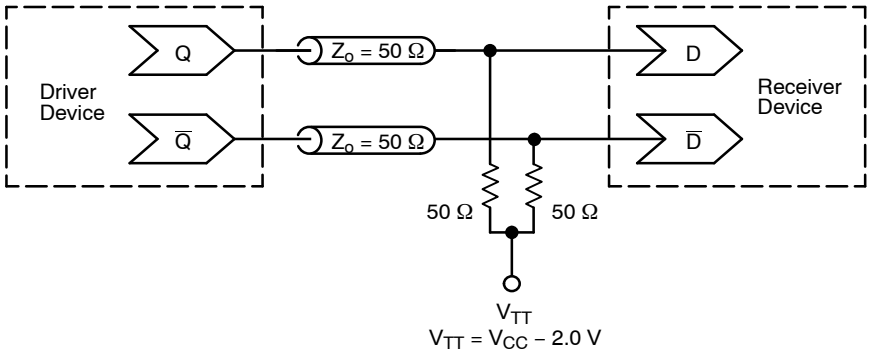


**Figure 2. Typical Termination for Output Driver and Device Evaluation (See Application Note AND8020/D − Termination of ECL Logic Devices.)**

### Resource Reference of Application Notes

**AN1405/D** − ECL Clock Distribution Techniques

**AN1406/D** − Designing with PECL (ECL at +5.0 V)

**AN1503/D** − ECLinPS™ I/O SPiCE Modeling Kit

**AN1504/D** − Metastability and the ECLinPS Family

**AN1568/D** − Interfacing Between LVDS and ECL

**AN1672/D** − The ECL Translator Guide

**AND8001/D** − Odd Number Counters Design

**AND8002/D** − Marking and Date Codes

**AND8020/D** − Termination of ECL Logic Devices

**AND8066/D** − Interfacing with ECLinPS

**AND8090/D** − AC Characteristics of ECL Devices

ECLinPS is a registered trademark of Semiconductor Components Industries, LLC (SCILLC) or its subsidiaries in the United States and/or other countries.

# MECHANICAL CASE OUTLINE
## PACKAGE DIMENSIONS

**SOIC−20 WB**
CASE 751D−05
ISSUE H

DATE 22 APR 2015

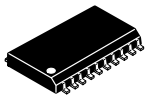

**SCALE 1:1**

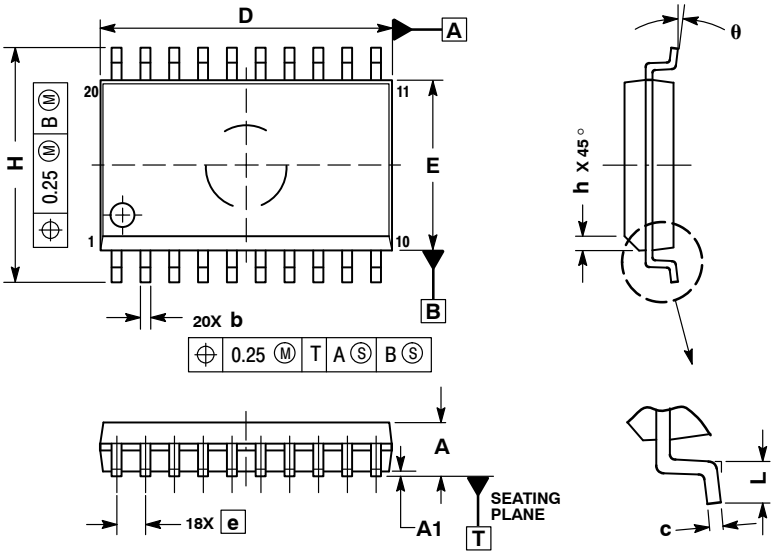


NOTES:
1. DIMENSIONS ARE IN MILLIMETERS.
2. INTERPRET DIMENSIONS AND TOLERANCES PER ASME Y14.5M, 1994.
3. DIMENSIONS D AND E DO NOT INCLUDE MOLD PROTRUSION.
4. MAXIMUM MOLD PROTRUSION 0.15 PER SIDE.
5. DIMENSION B DOES NOT INCLUDE DAMBAR PROTRUSION. ALLOWABLE PROTRUSION SHALL BE 0.13 TOTAL IN EXCESS OF B DIMENSION AT MAXIMUM MATERIAL CONDITION.

| | MILLIMETERS | |
|---|---|---|
| DIM | MIN | MAX |
| A | 2.35 | 2.65 |
| A1 | 0.10 | 0.25 |
| b | 0.35 | 0.49 |
| c | 0.23 | 0.32 |
| D | 12.65 | 12.95 |
| E | 7.40 | 7.60 |
| e | 1.27 BSC | |
| H | 10.05 | 10.55 |
| h | 0.25 | 0.75 |
| L | 0.50 | 0.90 |
| θ | 0° | 7° |

### RECOMMENDED SOLDERING FOOTPRINT*

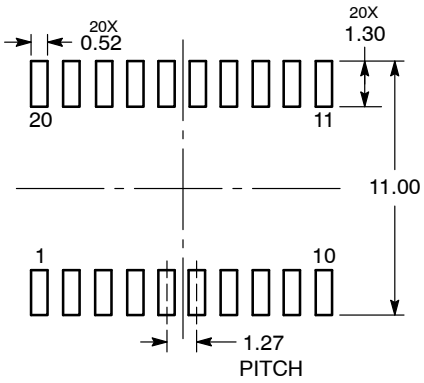


DIMENSIONS: MILLIMETERS

*For additional information on our Pb−Free strategy and soldering details, please download the ON Semiconductor Soldering and Mounting Techniques Reference Manual, SOLDERRM/D.

### GENERIC MARKING DIAGRAM*

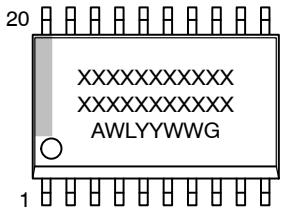


XXXXX = Specific Device Code
A = Assembly Location
WL = Wafer Lot
YY = Year
WW = Work Week
G = Pb−Free Package

*This information is generic. Please refer to device data sheet for actual part marking. Pb−Free indicator, “G” or microdot “▪”, may or may not be present. Some products may not follow the Generic Marking.

| | | |
|---|---|---|
| **DOCUMENT NUMBER:** | **98ASB42343B** | Electronic versions are uncontrolled except when accessed directly from the Document Repository. Printed versions are uncontrolled except when stamped “CONTROLLED COPY” in red. |
| **DESCRIPTION:** | **SOIC−20 WB** | **PAGE 1 OF 1** |

**onsemi** and ONSEMI. are trademarks of Semiconductor Components Industries, LLC dba **onsemi** or its subsidiaries in the United States and/or other countries. **onsemi** reserves the right to make changes without further notice to any products herein. **onsemi** makes no warranty, representation or guarantee regarding the suitability of its products for any particular purpose, nor does **onsemi** assume any liability arising out of the application or use of any product or circuit, and specifically disclaims any and all liability, including without limitation special, consequential or incidental damages. **onsemi** does not convey any license under its patent rights nor the rights of others.

© Semiconductor Components Industries, LLC, 2019

**onsemi**, , and other names, marks, and brands are registered and/or common law trademarks of Semiconductor Components Industries, LLC dba "**onsemi**" or its affiliates and/or subsidiaries in the United States and/or other countries. **onsemi** owns the rights to a number of patents, trademarks, copyrights, trade secrets, and other intellectual property. A listing of **onsemi**'s product/patent coverage may be accessed at www.onsemi.com/site/pdf/Patent−Marking.pdf. **onsemi** reserves the right to make changes at any time to any products or information herein, without notice. The information herein is provided "as−is" and **onsemi** makes no warranty, representation or guarantee regarding the accuracy of the information, product features, availability, functionality, or suitability of its products for any particular purpose, nor does **onsemi** assume any liability arising out of the application or use of any product or circuit, and specifically disclaims any and all liability, including without limitation special, consequential or incidental damages. Buyer is responsible for its products and applications using **onsemi** products, including compliance with all laws, regulations and safety requirements or standards, regardless of any support or applications information provided by **onsemi**. "Typical" parameters which may be provided in **onsemi** data sheets and/or specifications can and do vary in different applications and actual performance may vary over time. All operating parameters, including "Typicals" must be validated for each customer application by customer's technical experts. **onsemi** does not convey any license under any of its intellectual property rights nor the rights of others. **onsemi** products are not designed, intended, or authorized for use as a critical component in life support systems or any FDA Class 3 medical devices or medical devices with a same or similar classification in a foreign jurisdiction or any devices intended for implantation in the human body. Should Buyer purchase or use **onsemi** products for any such unintended or unauthorized application, Buyer shall indemnify and hold **onsemi** and its officers, employees, subsidiaries, affiliates, and distributors harmless against all claims, costs, damages, and expenses, and reasonable attorney fees arising out of, directly or indirectly, any claim of personal injury or death associated with such unintended or unauthorized use, even if such claim alleges that **onsemi** was negligent regarding the design or manufacture of the part. **onsemi** is an Equal Opportunity/Affirmative Action Employer. This literature is subject to all applicable copyright laws and is not for resale in any manner.

## ADDITIONAL INFORMATION

**TECHNICAL PUBLICATIONS**:
**Technical Library:** www.onsemi.com/design/resources/technical−documentation
**onsemi Website:** www.onsemi.com

**ONLINE SUPPORT**: www.onsemi.com/support
**For additional information, please contact your local Sales Representative at** www.onsemi.com/support/sales