MC100LVELT23

3.3 V Dual Differential LVPECL/LVDS to LVTTL Translator



ON Semiconductor®

www.onsemi.com



SOIC−8 NB
D SUFFIX
CASE 751−07



TSSOP−8
DT SUFFIX
CASE 948R−02

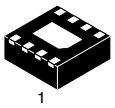

DFN−8
MN SUFFIX
CASE 506AA

Description

The MC100LVELT23 is a dual differential LVPECL/LVDS to LVTTL translator. Because LVPECL (Positive ECL) or LVDS levels are used only +3.3 V and ground are required. The small outline 8-lead package and the dual gate design of the LVELT23 makes it ideal for applications which require the translation of a clock and a data signal.

The LVELT23 is available in only the ECL 100K standard. Since there are no LVPECL outputs or an external V_{BB} reference, the LVELT23 does not require both ECL standard versions. The LVPECL inputs are differential. Therefore, the MC100LVELT23 can accept any standard differential LVPECL input referenced from a V_{CC} of +3.3 V.

Features

- 2.0 ns Typical Propagation Delay
- Maximum Frequency > 180 MHz
- Differential LVPECL Inputs
- PECL Mode Operating Range: V_{CC} = 3.0 V to 3.8 V with GND = 0 V
- 24 mA LVTTL Outputs
- Flow Through Pinouts
- Internal Pulldown and Pullup Resistors
- These Devices are Pb-Free, Halogen Free and are RoHS Compliant

MARKING DIAGRAMS*

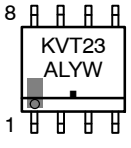

SOIC−8

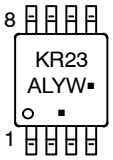

TSSOP−8



DFN−8

A = Assembly Location
L = Wafer Lot
Y = Year
W = Work Week
M = Date Code
▪ = Pb-Free Package

(Note: Microdot may be in either location)

*For additional marking information, refer to Application Note AND8002/D.

ORDERING INFORMATION

Device	Package	Shipping†
MC100LVELT23DG	SOIC−8 NB (Pb-Free)	98 Units/Tube
MC100LVELT23DR2G	SOIC−8 NB (Pb-Free)	2500/Tape & Reel
MC100LVELT23DTG	TSSOP−8 (Pb-Free)	100 Units/Tube
MC100LVELT23DTRG	TSSOP−8 (Pb-Free)	2500/Tape & Reel
MC100LVELT23MNRG	DFN−8 (Pb-Free)	1000/Tape & Reel

†For information on tape and reel specifications, including part orientation and tape sizes, please refer to our Tape and Reel Packaging Specifications Brochure, BRD8011/D.

© Semiconductor Components Industries, LLC, 2016

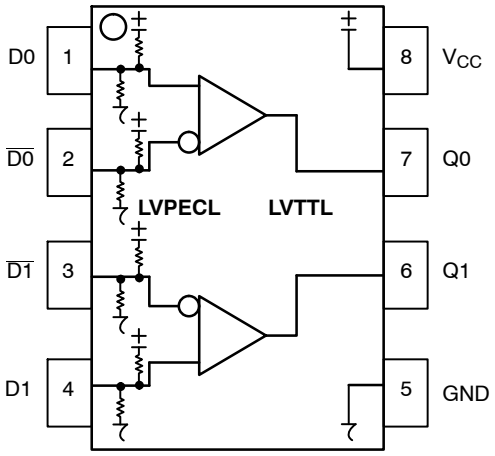

Figure 1. 8-Lead Pinout (Top View) **and Logic Diagram**

Table 1. PIN DESCRIPTION

Pin	Function
Q0, Q1 D0*, D1* $\overline{D0}$*, $\overline{D1}$* V_{CC} GND EP	LVTTL Outputs Differential LVPECL Inputs Positive Supply Ground (DFN8 only) Thermal exposed pad must be connected to a sufficient thermal conduit. Electrically connect to the most negative supply (GND) or leave unconnected, floating open.

** Pins will default to $V_{CC}/2$ when left open.

Table 2. ATTRIBUTES

Characteristics	Value
Internal Input Pulldown Resistor	50 kΩ
Internal Input Pullup Resistor	50 kΩ
ESD Protection Human Body Model Machine Model CDM	 > 1500 V > 100 V > 2000 V
Moisture Sensitivity, Indefinite Time Out of Drypack (Note 1)	Pb-Free Pkg
SOIC−8 NB TSSOP−8 DFN−8	Level 1 Level 3 Level 1
Flammability Rating Oxygen Index: 28 to 34	UL 94 V−0 @ 0.125 in
Transistor Count	91
Meets or Exceeds JEDEC Spec EIA/JESD78 IC Latchup Test	

1. Refer to Application Note AND8003/D for additional information.

Table 3. MAXIMUM RATINGS

Symbol	Parameter	Condition 1	Condition 2	Rating	Unit
V_{CC}	PECL Power Supply	GND = 0 V		3.8	V
V_I	Input Voltage	GND = 0 V, V_I not more positive than V_{CC}		3.8	V
I_{out}	Output Current	Continuous Surge		50 100	mA
T_A	Operating Temperature Range			−40 to +85	°C
T_{stg}	Storage Temperature			−65 to +150	°C
θ_{JA}	Thermal Resistance (Junction-to-Ambient)	0 lfpm 500 lfpm	SOIC−8 NB	190 130	°C/W
θ_{JC}	Thermal Resistance (Junction-to-Case)	Standard Board	SOIC−8 NB	41 to 44 ± 5%	°C/W
θ_{JA}	Thermal Resistance (Junction-to-Ambient)	0 lfpm 500 lfpm	TSSOP−8	185 140	°C/W
θ_{JC}	Thermal Resistance (Junction-to-Case)	Standard Board	TSSOP−8	41 to 44 ± 5%	°C/W
θ_{JA}	Thermal Resistance (Junction-to-Ambient)	0 lfpm 500 lfpm	DFN−8	129 84	°C/W
T_{sol}	Wave Solder Pb-Free	< 2 to 3 sec @ 260°C		265	°C
θ_{JC}	Thermal Resistance (Junction-to-Case)	(Note 1)	DFN−8	35 to 40	°C/W

Stresses exceeding those listed in the Maximum Ratings table may damage the device. If any of these limits are exceeded, device functionality should not be assumed, damage may occur and reliability may be affected.

1. JEDEC standard multilayer board − 2S2P (2 signal, 2 power)

Table 4. LVPECL INPUT DC CHARACTERISTICS (V_{CC} = 3.3 V; GND = 0 V (Note 1))

		−40°C			25°C			85°C			
Symbol	Characteristic	Min	Typ	Max	Min	Typ	Max	Min	Typ	Max	Unit
I_{CCH}	Power Supply Current (Outputs set to HIGH)	10	20	35	10	20	35	10	20	35	mA
I_{CCL}	Power Supply Current (Outputs set to LOW)	15	27	40	15	27	40	15	27	40	mA
V_{IH}	Input HIGH Voltage (Note 3)	2135		2420	2135		2420	2135		2420	mV
V_{IL}	Input LOW Voltage (Note 3)	1490		1825	1490		1825	1490		1825	mV
V_{IHCMR}	Input HIGH Voltage Common Mode Range (Notes 2 and 3)	1.2		V_{CC}	1.2		V_{CC}	1.2		V_{CC}	V
I_{IH}	Input HIGH Current			150			150			150	μA
I_{IL}	Input LOW Current $\overline{D}$	−150			−150			−150			μA

NOTE: Device will meet the specifications after thermal equilibrium has been established when mounted in a test socket or printed circuit board with maintained transverse airflow greater than 500 lfpm. Electrical parameters are guaranteed only over the declared operating temperature range. Functional operation of the device exceeding these conditions is not implied. Device specification limit values are applied individually under normal operating conditions and not valid simultaneously.

1. All values vary 1:1 with V_{CC}. V_{CC} can vary ±0.3 V.
2. V_{IHCMR} min varies 1:1 with GND, max varies 1:1 with V_{CC}.
3. LVTTL output R_L = 500 Ω to GND.

Table 5. LVTTL OUTPUT DC CHARACTERISTICS (V_{CC} = 3.3 V; GND = 0 V (Note 1))

Symbol	Characteristic	–40°C			25°C			85°C			Unit
		Min	Typ	Max	Min	Typ	Max	Min	Typ	Max	
V_{OH}	Output HIGH Voltage (I_{OH} = –3.0 mA) (Note 2)	2.4			2.4			2.4			V
V_{OL}	Output LOW Voltage (I_{OL} = 24 mA) (Note 2)			0.5			0.5			0.5	V
I_{OS}	Output Short Circuit Current	–180		–50	–180		–50	–180		–50	mA

NOTE: Device will meet the specifications after thermal equilibrium has been established when mounted in a test socket or printed circuit board with maintained transverse airflow greater than 500 lfpm. Electrical parameters are guaranteed only over the declared operating temperature range. Functional operation of the device exceeding these conditions is not implied. Device specification limit values are applied individually under normal operating conditions and not valid simultaneously.

1. All values vary 1:1 with V_{CC}. V_{CC} can vary ±0.3 V.
2. LVTTL output R_L = 500 Ω to GND.

Table 6. AC CHARACTERISTICS (V_{CC} = 3.3 V; GND = 0 V (Notes 1, 2))

Symbol	Characteristic	–40°C			25°C			85°C			Unit
		Min	Typ	Max	Min	Typ	Max	Min	Typ	Max	
F_{max}	Maximum Toggle Frequency (Note 3)	180			180			180			MHz
t_{PLH}, t_{PHL}	Propagation Delay to Output Differential	1.0	1.5	2.5	1.0	1.7	2.5	1.0	1.7	2.5	ns
t_{SK++} t_{SK--} t_{SKPP}	Output-to-Output Skew++ Output-to-Output Skew–– Part-to-Part Skew (Note 4)		15 35 70	60 80 500		15 40 70	70 80 500		30 40 140	125 80 500	ps
t_{JITTER}	Random Clock Jitter (RMS)		4.0	10		4.0	10		4.0	10	ps
V_{PP}	Input Voltage Swing (Differential Configuration) (Note 5)	200	800	1000	200	800	1000	200	800	1000	mV
t_r t_f	Output Rise/Fall Times (0.8 V – 2.0 V) Q, $\overline{Q}$	330	600	900	330	600	900	330	650	900	ps

NOTE: Device will meet the specifications after thermal equilibrium has been established when mounted in a test socket or printed circuit board with maintained transverse airflow greater than 500 lfpm. Electrical parameters are guaranteed only over the declared operating temperature range. Functional operation of the device exceeding these conditions is not implied. Device specification limit values are applied individually under normal operating conditions and not valid simultaneously.

1. All values vary 1:1 with V_{CC}. V_{CC} can vary ±0.3 V.
2. LVTTL output R_L = 500 Ω to GND and C_L = 20 pF to GND. Refer to Figure 2.
3. F_{max} guaranteed for functionality only. V_{OL} and V_{OH} levels are guaranteed at DC only.
4. Skews are measured between outputs under identical conditions.
5. 200 mV input guarantees full logic swing at the output.

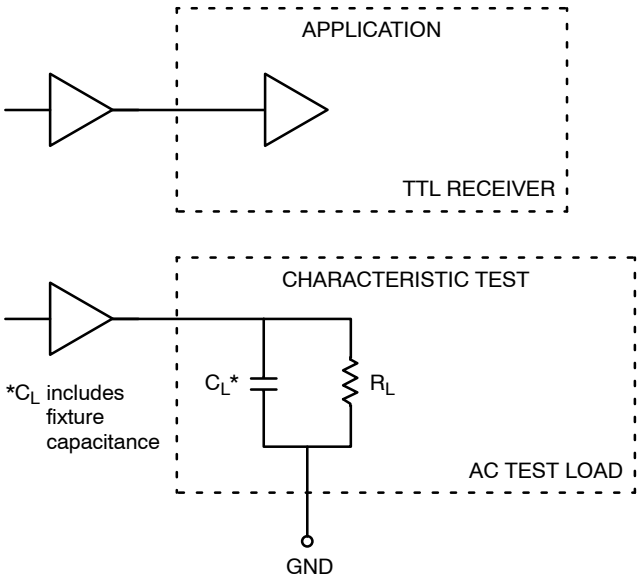

Figure 2. TTL Output Loading Used for Device Evaluation

Resource Reference of Application Notes

AN1405/D – ECL Clock Distribution Techniques

AN1406/D – Designing with PECL (ECL at +5.0 V)

AN1503/D – ECLinPS™ I/O SPiCE Modeling Kit

AN1504/D – Metastability and the ECLinPS Family

AN1568/D – Interfacing Between LVDS and ECL

AN1672/D – The ECL Translator Guide

AND8001/D – Odd Number Counters Design

AND8002/D – Marking and Date Codes

AND8020/D – Termination of ECL Logic Devices

AND8066/D – Interfacing with ECLinPS

AND8090/D – AC Characteristics of ECL Devices

ECLinPS is a registered trademark of Semiconductor Components Industries, LLC (SCILLC) or its subsidiaries in the United States and/or other countries.

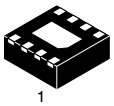

SCALE 4:1

DFN8 2x2, 0.5P
CASE 506AA
ISSUE F

DATE 04 MAY 2016

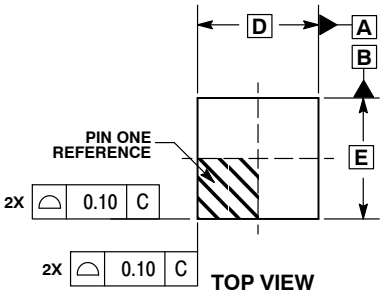

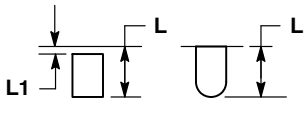

DETAIL A
OPTIONAL CONSTRUCTIONS

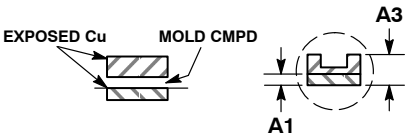

DETAIL B
ALTERNATE CONSTRUCTIONS

NOTES:
1. DIMENSIONING AND TOLERANCING PER ASME Y14.5M, 1994 .
2. CONTROLLING DIMENSION: MILLIMETERS.
3. DIMENSION b APPLIES TO PLATED TERMINAL AND IS MEASURED BETWEEN 0.15 AND 0.20 MM FROM TERMINAL TIP.
4. COPLANARITY APPLIES TO THE EXPOSED PAD AS WELL AS THE TERMINALS.

	MILLIMETERS	
DIM	MIN	MAX
A	0.80	1.00
A1	0.00	0.05
A3	0.20 REF	
b	0.20	0.30
D	2.00 BSC	
D2	1.10	1.30
E	2.00 BSC	
E2	0.70	0.90
e	0.50 BSC	
K	0.30 REF	
L	0.25	0.35
L1	---	0.10

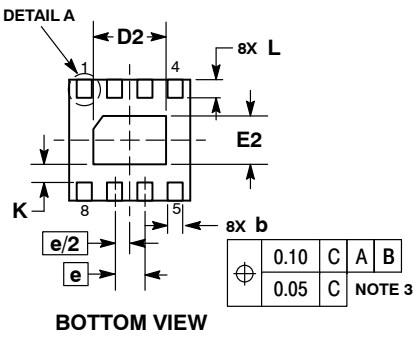

BOTTOM VIEW

RECOMMENDED SOLDERING FOOTPRINT*

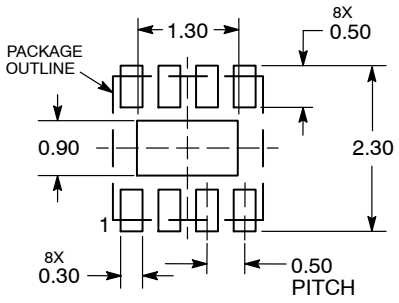

DIMENSIONS: MILLIMETERS

*For additional information on our Pb−Free strategy and soldering details, please download the **onsemi** Soldering and Mounting Techniques Reference Manual, SOLDERRM/D.

GENERIC MARKING DIAGRAM*

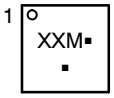

XX = Specific Device Code
M = Date Code
▪ = Pb−Free Device

*This information is generic. Please refer to device data sheet for actual part marking. Pb−Free indicator, “G” or microdot “▪”, may or may not be present. Some products may not follow the Generic Marking.

DOCUMENT NUMBER:	**98AON18658D**	Electronic versions are uncontrolled except when accessed directly from the Document Repository. Printed versions are uncontrolled except when stamped “CONTROLLED COPY” in red.	
DESCRIPTION:	**DFN8, 2.0X2.0, 0.5MM PITCH**		**PAGE 1 OF 1**

onsemi and onsemi are trademarks of Semiconductor Components Industries, LLC dba **onsemi** or its subsidiaries in the United States and/or other countries. **onsemi** reserves the right to make changes without further notice to any products herein. **onsemi** makes no warranty, representation or guarantee regarding the suitability of its products for any particular purpose, nor does **onsemi** assume any liability arising out of the application or use of any product or circuit, and specifically disclaims any and all liability, including without limitation special, consequential or incidental damages. **onsemi** does not convey any license under its patent rights nor the rights of others.

© Semiconductor Components Industries, LLC, 2016

MECHANICAL CASE OUTLINE
PACKAGE DIMENSIONS



SCALE 1:1

SOIC−8 NB
CASE 751−07
ISSUE AK

DATE 16 FEB 2011

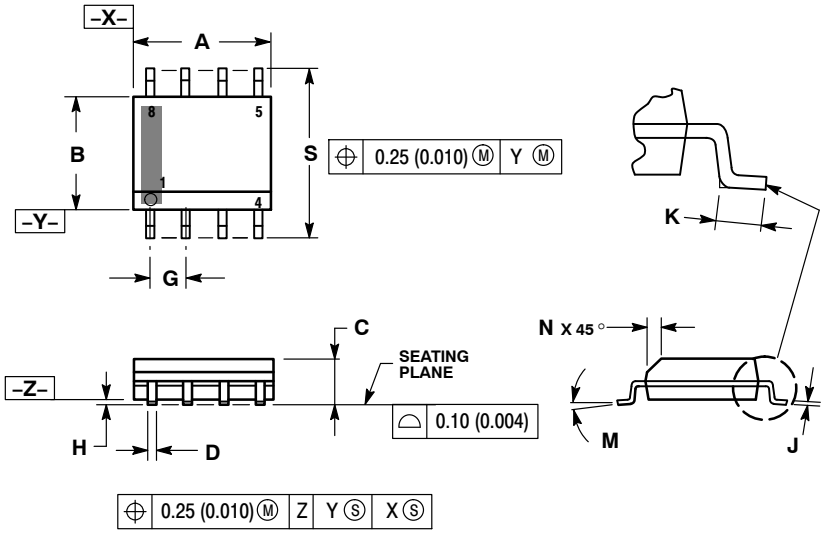

NOTES:
1. DIMENSIONING AND TOLERANCING PER ANSI Y14.5M, 1982.
2. CONTROLLING DIMENSION: MILLIMETER.
3. DIMENSION A AND B DO NOT INCLUDE MOLD PROTRUSION.
4. MAXIMUM MOLD PROTRUSION 0.15 (0.006) PER SIDE.
5. DIMENSION D DOES NOT INCLUDE DAMBAR PROTRUSION. ALLOWABLE DAMBAR PROTRUSION SHALL BE 0.127 (0.005) TOTAL IN EXCESS OF THE D DIMENSION AT MAXIMUM MATERIAL CONDITION.
6. 751−01 THRU 751−06 ARE OBSOLETE. NEW STANDARD IS 751−07.

	MILLIMETERS		INCHES	
DIM	MIN	MAX	MIN	MAX
A	4.80	5.00	0.189	0.197
B	3.80	4.00	0.150	0.157
C	1.35	1.75	0.053	0.069
D	0.33	0.51	0.013	0.020
G	1.27 BSC		0.050 BSC	
H	0.10	0.25	0.004	0.010
J	0.19	0.25	0.007	0.010
K	0.40	1.27	0.016	0.050
M	0 °	8 °	0 °	8 °
N	0.25	0.50	0.010	0.020
S	5.80	6.20	0.228	0.244

SOLDERING FOOTPRINT*

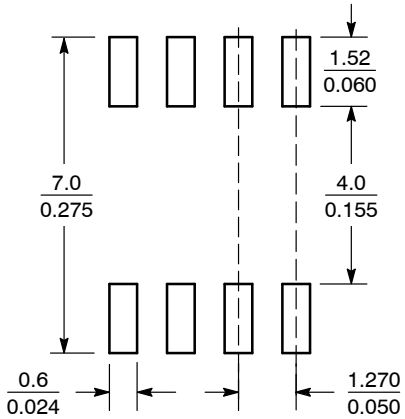

SCALE 6:1 (mm / inches)

*For additional information on our Pb−Free strategy and soldering details, please download the ON Semiconductor Soldering and Mounting Techniques Reference Manual, SOLDERRM/D.

GENERIC MARKING DIAGRAM*

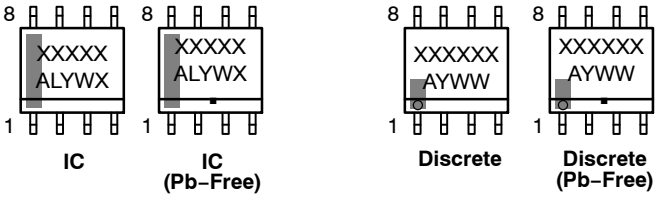

IC | IC (Pb−Free) | Discrete | Discrete (Pb−Free)

XXXXX = Specific Device Code
A = Assembly Location
L = Wafer Lot
Y = Year
W = Work Week
▪ = Pb−Free Package

XXXXXX = Specific Device Code
A = Assembly Location
Y = Year
WW = Work Week
▪ = Pb−Free Package

*This information is generic. Please refer to device data sheet for actual part marking. Pb−Free indicator, "G" or microdot "▪", may or may not be present. Some products may not follow the Generic Marking.

STYLES ON PAGE 2

DOCUMENT NUMBER:	**98ASB42564B**	Electronic versions are uncontrolled except when accessed directly from the Document Repository. Printed versions are uncontrolled except when stamped "CONTROLLED COPY" in red.
DESCRIPTION:	**SOIC−8 NB**	**PAGE 1 OF 2**

onsemi and onsemi are trademarks of Semiconductor Components Industries, LLC dba **onsemi** or its subsidiaries in the United States and/or other countries. **onsemi** reserves the right to make changes without further notice to any products herein. **onsemi** makes no warranty, representation or guarantee regarding the suitability of its products for any particular purpose, nor does **onsemi** assume any liability arising out of the application or use of any product or circuit, and specifically disclaims any and all liability, including without limitation special, consequential or incidental damages. **onsemi** does not convey any license under its patent rights nor the rights of others.

© Semiconductor Components Industries, LLC, 2019

SOIC−8 NB
CASE 751−07
ISSUE AK

DATE 16 FEB 2011

STYLE 1:
PIN 1. EMITTER
2. COLLECTOR
3. COLLECTOR
4. EMITTER
5. EMITTER
6. BASE
7. BASE
8. EMITTER

STYLE 2:
PIN 1. COLLECTOR, DIE, #1
2. COLLECTOR, #1
3. COLLECTOR, #2
4. COLLECTOR, #2
5. BASE, #2
6. EMITTER, #2
7. BASE, #1
8. EMITTER, #1

STYLE 3:
PIN 1. DRAIN, DIE #1
2. DRAIN, #1
3. DRAIN, #2
4. DRAIN, #2
5. GATE, #2
6. SOURCE, #2
7. GATE, #1
8. SOURCE, #1

STYLE 4:
PIN 1. ANODE
2. ANODE
3. ANODE
4. ANODE
5. ANODE
6. ANODE
7. ANODE
8. COMMON CATHODE

STYLE 5:
PIN 1. DRAIN
2. DRAIN
3. DRAIN
4. DRAIN
5. GATE
6. GATE
7. SOURCE
8. SOURCE

STYLE 6:
PIN 1. SOURCE
2. DRAIN
3. DRAIN
4. SOURCE
5. SOURCE
6. GATE
7. GATE
8. SOURCE

STYLE 7:
PIN 1. INPUT
2. EXTERNAL BYPASS
3. THIRD STAGE SOURCE
4. GROUND
5. DRAIN
6. GATE 3
7. SECOND STAGE Vd
8. FIRST STAGE Vd

STYLE 8:
PIN 1. COLLECTOR, DIE #1
2. BASE, #1
3. BASE, #2
4. COLLECTOR, #2
5. COLLECTOR, #2
6. EMITTER, #2
7. EMITTER, #1
8. COLLECTOR, #1

STYLE 9:
PIN 1. EMITTER, COMMON
2. COLLECTOR, DIE #1
3. COLLECTOR, DIE #2
4. EMITTER, COMMON
5. EMITTER, COMMON
6. BASE, DIE #2
7. BASE, DIE #1
8. EMITTER, COMMON

STYLE 10:
PIN 1. GROUND
2. BIAS 1
3. OUTPUT
4. GROUND
5. GROUND
6. BIAS 2
7. INPUT
8. GROUND

STYLE 11:
PIN 1. SOURCE 1
2. GATE 1
3. SOURCE 2
4. GATE 2
5. DRAIN 2
6. DRAIN 2
7. DRAIN 1
8. DRAIN 1

STYLE 12:
PIN 1. SOURCE
2. SOURCE
3. SOURCE
4. GATE
5. DRAIN
6. DRAIN
7. DRAIN
8. DRAIN

STYLE 13:
PIN 1. N.C.
2. SOURCE
3. SOURCE
4. GATE
5. DRAIN
6. DRAIN
7. DRAIN
8. DRAIN

STYLE 14:
PIN 1. N−SOURCE
2. N−GATE
3. P−SOURCE
4. P−GATE
5. P−DRAIN
6. P−DRAIN
7. N−DRAIN
8. N−DRAIN

STYLE 15:
PIN 1. ANODE 1
2. ANODE 1
3. ANODE 1
4. ANODE 1
5. CATHODE, COMMON
6. CATHODE, COMMON
7. CATHODE, COMMON
8. CATHODE, COMMON

STYLE 16:
PIN 1. EMITTER, DIE #1
2. BASE, DIE #1
3. EMITTER, DIE #2
4. BASE, DIE #2
5. COLLECTOR, DIE #2
6. COLLECTOR, DIE #2
7. COLLECTOR, DIE #1
8. COLLECTOR, DIE #1

STYLE 17:
PIN 1. VCC
2. V2OUT
3. V1OUT
4. TXE
5. RXE
6. VEE
7. GND
8. ACC

STYLE 18:
PIN 1. ANODE
2. ANODE
3. SOURCE
4. GATE
5. DRAIN
6. DRAIN
7. CATHODE
8. CATHODE

STYLE 19:
PIN 1. SOURCE 1
2. GATE 1
3. SOURCE 2
4. GATE 2
5. DRAIN 2
6. MIRROR 2
7. DRAIN 1
8. MIRROR 1

STYLE 20:
PIN 1. SOURCE (N)
2. GATE (N)
3. SOURCE (P)
4. GATE (P)
5. DRAIN
6. DRAIN
7. DRAIN
8. DRAIN

STYLE 21:
PIN 1. CATHODE 1
2. CATHODE 2
3. CATHODE 3
4. CATHODE 4
5. CATHODE 5
6. COMMON ANODE
7. COMMON ANODE
8. CATHODE 6

STYLE 22:
PIN 1. I/O LINE 1
2. COMMON CATHODE/VCC
3. COMMON CATHODE/VCC
4. I/O LINE 3
5. COMMON ANODE/GND
6. I/O LINE 4
7. I/O LINE 5
8. COMMON ANODE/GND

STYLE 23:
PIN 1. LINE 1 IN
2. COMMON ANODE/GND
3. COMMON ANODE/GND
4. LINE 2 IN
5. LINE 2 OUT
6. COMMON ANODE/GND
7. COMMON ANODE/GND
8. LINE 1 OUT

STYLE 24:
PIN 1. BASE
2. EMITTER
3. COLLECTOR/ANODE
4. COLLECTOR/ANODE
5. CATHODE
6. CATHODE
7. COLLECTOR/ANODE
8. COLLECTOR/ANODE

STYLE 25:
PIN 1. VIN
2. N/C
3. REXT
4. GND
5. IOUT
6. IOUT
7. IOUT
8. IOUT

STYLE 26:
PIN 1. GND
2. dv/dt
3. ENABLE
4. ILIMIT
5. SOURCE
6. SOURCE
7. SOURCE
8. VCC

STYLE 27:
PIN 1. ILIMIT
2. OVLO
3. UVLO
4. INPUT+
5. SOURCE
6. SOURCE
7. SOURCE
8. DRAIN

STYLE 28:
PIN 1. SW_TO_GND
2. DASIC_OFF
3. DASIC_SW_DET
4. GND
5. V_MON
6. VBULK
7. VBULK
8. VIN

STYLE 29:
PIN 1. BASE, DIE #1
2. EMITTER, #1
3. BASE, #2
4. EMITTER, #2
5. COLLECTOR, #2
6. COLLECTOR, #2
7. COLLECTOR, #1
8. COLLECTOR, #1

STYLE 30:
PIN 1. DRAIN 1
2. DRAIN 1
3. GATE 2
4. SOURCE 2
5. SOURCE 1/DRAIN 2
6. SOURCE 1/DRAIN 2
7. SOURCE 1/DRAIN 2
8. GATE 1

DOCUMENT NUMBER:	**98ASB42564B**	Electronic versions are uncontrolled except when accessed directly from the Document Repository. Printed versions are uncontrolled except when stamped "CONTROLLED COPY" in red.	
DESCRIPTION:	**SOIC−8 NB**		**PAGE 2 OF 2**

onsemi and ONSEMI. are trademarks of Semiconductor Components Industries, LLC dba **onsemi** or its subsidiaries in the United States and/or other countries. **onsemi** reserves the right to make changes without further notice to any products herein. **onsemi** makes no warranty, representation or guarantee regarding the suitability of its products for any particular purpose, nor does **onsemi** assume any liability arising out of the application or use of any product or circuit, and specifically disclaims any and all liability, including without limitation special, consequential or incidental damages. **onsemi** does not convey any license under its patent rights nor the rights of others.

© Semiconductor Components Industries, LLC, 2019

TSSOP 8
CASE 948R–02
ISSUE A

DATE 04/07/2000

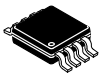

SCALE 2:1

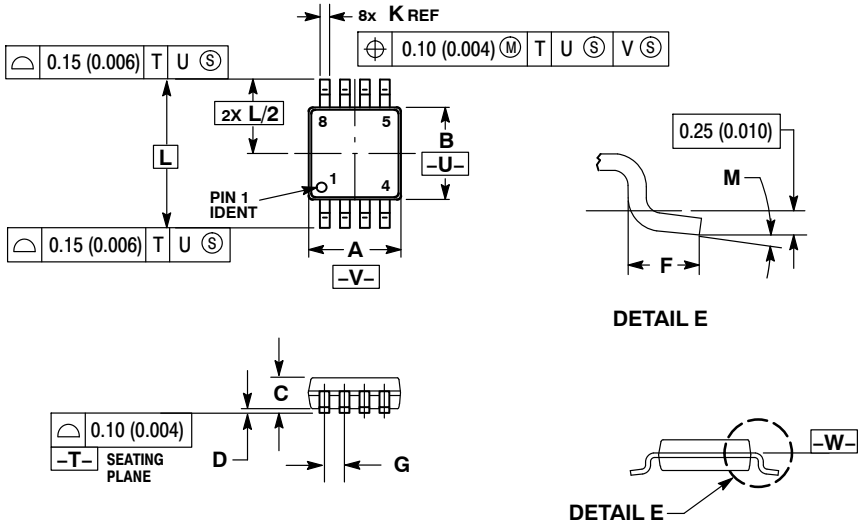

NOTES:
1. DIMENSIONING AND TOLERANCING PER ANSI Y14.5M, 1982.
2. CONTROLLING DIMENSION: MILLIMETER.
3. DIMENSION A DOES NOT INCLUDE MOLD FLASH. PROTRUSIONS OR GATE BURRS. MOLD FLASH OR GATE BURRS SHALL NOT EXCEED 0.15 (0.006) PER SIDE.
4. DIMENSION B DOES NOT INCLUDE INTERLEAD FLASH OR PROTRUSION. INTERLEAD FLASH OR PROTRUSION SHALL NOT EXCEED 0.25 (0.010) PER SIDE.
5. TERMINAL NUMBERS ARE SHOWN FOR REFERENCE ONLY.
6. DIMENSION A AND B ARE TO BE DETERMINED AT DATUM PLANE –W–.

	MILLIMETERS		INCHES	
DIM	MIN	MAX	MIN	MAX
A	2.90	3.10	0.114	0.122
B	2.90	3.10	0.114	0.122
C	0.80	1.10	0.031	0.043
D	0.05	0.15	0.002	0.006
F	0.40	0.70	0.016	0.028
G	0.65 BSC		0.026 BSC	
K	0.25	0.40	0.010	0.016
L	4.90 BSC		0.193 BSC	
M	0°	6°	0°	6°

ON Semiconductor and ON are trademarks of Semiconductor Components Industries, LLC dba ON Semiconductor or its subsidiaries in the United States and/or other countries. ON Semiconductor reserves the right to make changes without further notice to any products herein. ON Semiconductor makes no warranty, representation or guarantee regarding the suitability of its products for any particular purpose, nor does ON Semiconductor assume any liability arising out of the application or use of any product or circuit, and specifically disclaims any and all liability, including without limitation special, consequential or incidental damages. ON Semiconductor does not convey any license under its patent rights nor the rights of others.

© Semiconductor Components Industries, LLC, 2019

onsemi, , and other names, marks, and brands are registered and/or common law trademarks of Semiconductor Components Industries, LLC dba "**onsemi**" or its affiliates and/or subsidiaries in the United States and/or other countries. **onsemi** owns the rights to a number of patents, trademarks, copyrights, trade secrets, and other intellectual property. A listing of **onsemi**'s product/patent coverage may be accessed at www.onsemi.com/site/pdf/Patent−Marking.pdf. **onsemi** reserves the right to make changes at any time to any products or information herein, without notice. The information herein is provided "as−is" and **onsemi** makes no warranty, representation or guarantee regarding the accuracy of the information, product features, availability, functionality, or suitability of its products for any particular purpose, nor does **onsemi** assume any liability arising out of the application or use of any product or circuit, and specifically disclaims any and all liability, including without limitation special, consequential or incidental damages. Buyer is responsible for its products and applications using **onsemi** products, including compliance with all laws, regulations and safety requirements or standards, regardless of any support or applications information provided by **onsemi**. "Typical" parameters which may be provided in **onsemi** data sheets and/or specifications can and do vary in different applications and actual performance may vary over time. All operating parameters, including "Typicals" must be validated for each customer application by customer's technical experts. **onsemi** does not convey any license under any of its intellectual property rights nor the rights of others. **onsemi** products are not designed, intended, or authorized for use as a critical component in life support systems or any FDA Class 3 medical devices or medical devices with a same or similar classification in a foreign jurisdiction or any devices intended for implantation in the human body. Should Buyer purchase or use **onsemi** products for any such unintended or unauthorized application, Buyer shall indemnify and hold **onsemi** and its officers, employees, subsidiaries, affiliates, and distributors harmless against all claims, costs, damages, and expenses, and reasonable attorney fees arising out of, directly or indirectly, any claim of personal injury or death associated with such unintended or unauthorized use, even if such claim alleges that **onsemi** was negligent regarding the design or manufacture of the part. **onsemi** is an Equal Opportunity/Affirmative Action Employer. This literature is subject to all applicable copyright laws and is not for resale in any manner.

ADDITIONAL INFORMATION

TECHNICAL PUBLICATIONS:
Technical Library: www.onsemi.com/design/resources/technical−documentation
onsemi Website: www.onsemi.com

ONLINE SUPPORT: www.onsemi.com/support
For additional information, please contact your local Sales Representative at www.onsemi.com/support/sales