# 5 V ECL 4-Input OR/NOR

# MC10EL01, MC100EL01

**ON Semiconductor®**

www.onsemi.com

8
1

**SOIC−8**
**D SUFFIX**
**CASE 751−07**

### Description

The MC10EL/100EL01 is a 4-input OR/NOR gate. The device is functionally equivalent to the E101 device with higher performance capabilities. With propagation delays and output transition times significantly faster than the E101, the EL01 is ideally suited for those applications which require the ultimate in AC performance.

The 100 series contains temperature compensation.

### Features

- 230 ps Propagation Delay
- ESD Protection:
  - > 1 kV Human Body Model
  - > 100 V Machine Model
- PECL Mode Operating Range:
  - $V_{CC}$ = 4.2 V to 5.7 V with $V_{EE}$ = 0 V
- NECL Mode Operating Range:
  - $V_{CC}$ = 0 V with $V_{EE}$ = −4.2 V to −5.7 V
- Internal Input Pulldown Resistors
- Meets or Exceeds JEDEC Spec EIA/JESD78 IC Latchup Test
- Moisture Sensitivity Level
  - Level 1 for SOIC−8
  - For Additional Information, see Application Note AND8003/D
- Flammability Rating:
  - UL 94 V−0 @ 0.125 in, Oxygen Index: 28 to 34
- Transistor Count = 46 devices
- These Devices are Pb-Free, Halogen Free and are RoHS Compliant

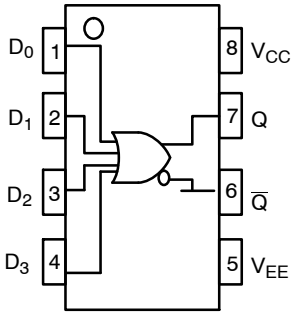


**Table 1. PIN DESCRIPTION**

| PIN | FUNCTION |
|---|---|
| D0−D3 | ECL Data Inputs |
| Q, $\overline{Q}$ | ECL Data Outputs |
| $V_{CC}$ | Positive Supply |
| $V_{EE}$ | Negative Supply |

**Figure 1. Logic Diagram and Pinout Assignment**

### MARKING DIAGRAM*

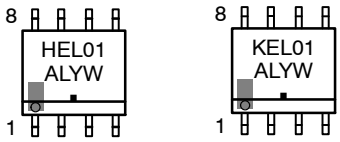


H = MC10
K = MC100
A = Assembly Location
L = Wafer Lot
Y = Year
W = Work Week
▪ = Pb-Free Package

(Note: Microdot may be in either location)

*For additional marking information, refer to Application Note AND8002/D.

### ORDERING INFORMATION

| Device | Package | Shipping† |
|---|---|---|
| MC10EL01DG | SOIC−8 (Pb-Free) | 98 Units / Tube |
| MC100EL01DG | SOIC−8 (Pb-Free) | 98 Units / Tube |
| MC100EL01DR2G | SOIC−8 (Pb-Free) | 2500 / Tape & Reel |

†For information on tape and reel specifications, including part orientation and tape sizes, please refer to our Tape and Reel Packaging Specifications Brochure, BRD8011/D.

© Semiconductor Components Industries, LLC, 2016

**Table 2. MAXIMUM RATINGS**

| Symbol | Parameter | Condition 1 | Condition 2 | Rating | Unit |
|---|---|---|---|---|---|
| $V_{CC}$ | PECL Mode Power Supply | $V_{EE}$ = 0 V | | 8 | V |
| $V_{EE}$ | NECL Mode Power Supply | $V_{CC}$ = 0 V | | −8 | V |
| $V_I$ | PECL Mode Input Voltage<br>NECL Mode Input Voltage | $V_{EE}$ = 0 V<br>$V_{CC}$ = 0 V | $V_I \le V_{CC}$<br>$V_I \ge V_{EE}$ | 6<br>−6 | V |
| $I_{out}$ | Output Current | Continuous<br>Surge | | 50<br>100 | mA |
| $T_A$ | Operating Temperature Range | | | −40 to +85 | °C |
| $T_{stg}$ | Storage Temperature Range | | | −65 to +150 | °C |
| $\theta_{JA}$ | Thermal Resistance (Junction-to-Ambient) | 0 lfpm<br>500 lfpm | SOIC−8 | 190<br>130 | °C/W |
| $\theta_{JC}$ | Thermal Resistance (Junction-to-Case) | Standard Board | SOIC−8 | 41 to 44 | °C/W |
| $T_{sol}$ | Wave Solder (Pb-Free) | <2 to 3 sec @ 260°C | | 265 | °C |

Stresses exceeding those listed in the Maximum Ratings table may damage the device. If any of these limits are exceeded, device functionality should not be assumed, damage may occur and reliability may be affected.

**Table 3. 10EL SERIES PECL DC CHARACTERISTICS** ($V_{CC}$ = 5.0 V; $V_{EE}$ = 0.0 V (Note 1))

| Symbol | Characteristic | −40°C | | | 25°C | | | 85°C | | | Unit |
|---|---|---|---|---|---|---|---|---|---|---|---|
| | | Min | Typ | Max | Min | Typ | Max | Min | Typ | Max | |
| $I_{EE}$ | Power Supply Current | | 14 | 17 | | 14 | 17 | | 14 | 17 | mA |
| $V_{OH}$ | Output HIGH Voltage (Note 2) | 3920 | 4010 | 4110 | 4020 | 4105 | 4190 | 4090 | 4185 | 4280 | mV |
| $V_{OL}$ | Output LOW Voltage (Note 2) | 3050 | 3200 | 3350 | 3050 | 3210 | 3370 | 3050 | 3227 | 3405 | mV |
| $V_{IH}$ | Input HIGH Voltage | 3770 | | 4110 | 3870 | | 4190 | 3940 | | 4280 | mV |
| $V_{IL}$ | Input LOW Voltage | 3050 | | 3500 | 3050 | | 3520 | 3050 | | 3555 | mV |
| $I_{IH}$ | Input HIGH Current | | | 150 | | | 150 | | | 150 | μA |
| $I_{IL}$ | Input LOW Current | 0.5 | | | 0.5 | | | 0.3 | | | μA |

NOTE: Device will meet the specifications after thermal equilibrium has been established when mounted in a test socket or printed circuit board with maintained transverse airflow greater than 500 lfpm.

1. Input and output parameters vary 1:1 with $V_{CC}$. $V_{EE}$ can vary +0.25 V / −0.5 V.
2. Outputs are terminated through a 50 Ω resistor to $V_{CC}$ − 2.0 V.

**Table 4. 10EL SERIES NECL DC CHARACTERISTICS** ($V_{CC}$ = 0.0 V; $V_{EE}$ = −5.0 V (Note 1))

| Symbol | Characteristic | −40°C | | | 25°C | | | 85°C | | | Unit |
|---|---|---|---|---|---|---|---|---|---|---|---|
| | | Min | Typ | Max | Min | Typ | Max | Min | Typ | Max | |
| $I_{EE}$ | Power Supply Current | | 14 | 17 | | 14 | 17 | | 14 | 17 | mA |
| $V_{OH}$ | Output HIGH Voltage (Note 2) | −1080 | −990 | −890 | −980 | −895 | −810 | −910 | −815 | −720 | mV |
| $V_{OL}$ | Output LOW Voltage (Note 2) | −1950 | −1800 | −1650 | −1950 | −1790 | −1630 | −1950 | −1773 | −1595 | mV |
| $V_{IH}$ | Input HIGH Voltage | −1230 | | −890 | −1130 | | −810 | −1060 | | −720 | mV |
| $V_{IL}$ | Input LOW Voltage | −1950 | | −1500 | −1950 | | −1480 | −1950 | | −1445 | mV |
| $I_{IH}$ | Input HIGH Current | | | 150 | | | 150 | | | 150 | μA |
| $I_{IL}$ | Input LOW Current | 0.5 | | | 0.5 | | | 0.3 | | | μA |

NOTE: Device will meet the specifications after thermal equilibrium has been established when mounted in a test socket or printed circuit board with maintained transverse airflow greater than 500 lfpm.

1. Input and output parameters vary 1:1 with $V_{CC}$. $V_{EE}$ can vary +0.25 V / −0.5 V.
2. Outputs are terminated through a 50 Ω resistor to $V_{CC}$ − 2.0 V.

**Table 5. 100EL SERIES PECL DC CHARACTERISTICS** ($V_{CC}$ = 5.0 V; $V_{EE}$ = 0.0 V (Note 1))

| Symbol | Characteristic | −40°C | | | 25°C | | | 85°C | | | Unit |
|---|---|---|---|---|---|---|---|---|---|---|---|
| | | Min | Typ | Max | Min | Typ | Max | Min | Typ | Max | |
| $I_{EE}$ | Power Supply Current | | 14 | 17 | | 14 | 17 | | 16 | 20 | mA |
| $V_{OH}$ | Output HIGH Voltage (Note 2) | 3915 | 3995 | 4120 | 3975 | 4045 | 4120 | 3975 | 4050 | 4120 | mV |
| $V_{OL}$ | Output LOW Voltage (Note 2) | 3170 | 3305 | 3445 | 3190 | 3295 | 3380 | 3190 | 3295 | 3380 | mV |
| $V_{IH}$ | Input HIGH Voltage | 3835 | | 4120 | 3835 | | 4120 | 3835 | | 4120 | mV |
| $V_{IL}$ | Input LOW Voltage | 3190 | | 3525 | 3190 | | 3525 | 3190 | | 3525 | mV |
| $I_{IH}$ | Input HIGH Current | | | 150 | | | 150 | | | 150 | μA |
| $I_{IL}$ | Input LOW Current | 0.5 | | | 0.5 | | | 0.5 | | | μA |

NOTE: Device will meet the specifications after thermal equilibrium has been established when mounted in a test socket or printed circuit board with maintained transverse airflow greater than 500 lfpm.

1. Input and output parameters vary 1:1 with $V_{CC}$. $V_{EE}$ can vary +0.8 V / −0.5 V.
2. Outputs are terminated through a 50 Ω resistor to $V_{CC}$ − 2.0 V.

**Table 6. 100EL SERIES NECL DC CHARACTERISTICS** ($V_{CC}$ = 0.0 V; $V_{EE}$ = −5.0 V (Note 1))

| Symbol | Characteristic | −40°C | | | 25°C | | | 85°C | | | Unit |
|---|---|---|---|---|---|---|---|---|---|---|---|
| | | Min | Typ | Max | Min | Typ | Max | Min | Typ | Max | |
| $I_{EE}$ | Power Supply Current | | 14 | 17 | | 14 | 17 | | 16 | 20 | mA |
| $V_{OH}$ | Output HIGH Voltage (Note 2) | −1085 | −1005 | −880 | −1025 | −955 | −880 | −1025 | −955 | −880 | mV |
| $V_{OL}$ | Output LOW Voltage (Note 2) | −1830 | −1695 | −1555 | −1810 | −1705 | −1620 | −1810 | −1705 | −1620 | mV |
| $V_{IH}$ | Input HIGH Voltage | −1165 | | −880 | −1165 | | −880 | −1165 | | −880 | mV |
| $V_{IL}$ | Input LOW Voltage | −1810 | | −1475 | −1810 | | −1475 | −1810 | | −1475 | mV |
| $I_{IH}$ | Input HIGH Current | | | 150 | | | 150 | | | 150 | μA |
| $I_{IL}$ | Input LOW Current | 0.5 | | | 0.5 | | | 0.5 | | | μA |

NOTE: Device will meet the specifications after thermal equilibrium has been established when mounted in a test socket or printed circuit board with maintained transverse airflow greater than 500 lfpm.

1. Input and output parameters vary 1:1 with $V_{CC}$. $V_{EE}$ can vary +0.8 V / −0.5 V.
2. Outputs are terminated through a 50 Ω resistor to $V_{CC}$ − 2.0 V.

**Table 7. AC CHARACTERISTICS** ($V_{CC}$ = 5.0 V; $V_{EE}$ = 0.0 V or $V_{CC}$ = 0.0 V; $V_{EE}$ = −5.0 V (Note 1))

| Symbol | Characteristic | −40°C | | | 25°C | | | 85°C | | | Unit |
|---|---|---|---|---|---|---|---|---|---|---|---|
| | | Min | Typ | Max | Min | Typ | Max | Min | Typ | Max | |
| $f_{MAX}$ | Maximum Toggle Frequency | | TBD | | | TBD | | | TBD | | GHz |
| $t_{PLH}$<br>$t_{PHL}$ | Propagation Delay to Output | 70 | 220 | 370 | 130 | 230 | 330 | 150 | 250 | 350 | ps |
| $t_{JITTER}$ | Cycle-to-Cycle Jitter | | TBD | | | TBD | | | TBD | | ps |
| $t_r$<br>$t_f$ | Output Rise/Fall Times Q (20% − 80%) | 100 | 225 | 350 | 100 | 225 | 350 | 100 | 225 | 350 | ps |

NOTE: Device will meet the specifications after thermal equilibrium has been established when mounted in a test socket or printed circuit board with maintained transverse airflow greater than 500 lfpm.

1. 10 Series: $V_{EE}$ can vary +0.25 V / −0.5 V.
   100 Series: $V_{EE}$ can vary +0.8 V / −0.5 V.

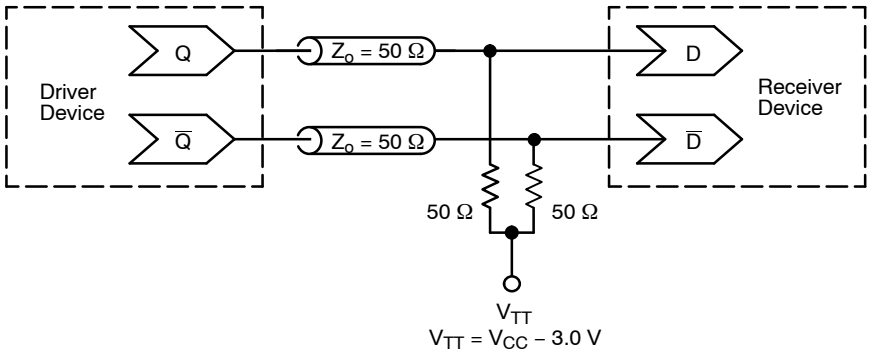


**Figure 2. Typical Termination for Output Driver and Device Evaluation (See Application Note AND8020/D – Termination of ECL Logic Devices.)**

### Resource Reference of Application Notes

**AN1405/D** – ECL Clock Distribution Techniques

**AN1406/D** – Designing with PECL (ECL at +5.0 V)

**AN1503/D** – ECLinPS™ I/O SPiCE Modeling Kit

**AN1504/D** – Metastability and the ECLinPS Family

**AN1568/D** – Interfacing Between LVDS and ECL

**AN1672/D** – The ECL Translator Guide

**AND8001/D** – Odd Number Counters Design

**AND8002/D** – Marking and Date Codes

**AND8020/D** – Termination of ECL Logic Devices

**AND8066/D** – Interfacing with ECLinPS

**AND8090/D** – AC Characteristics of ECL Devices

ECLinPS is a trademark of Semiconductor Components Industries, LLC (SCILLC) or its subsidiaries in the United States and/or other countries.

# MECHANICAL CASE OUTLINE
## PACKAGE DIMENSIONS



**SCALE 1:1**

**SOIC−8 NB**
CASE 751−07
ISSUE AK

DATE 16 FEB 2011

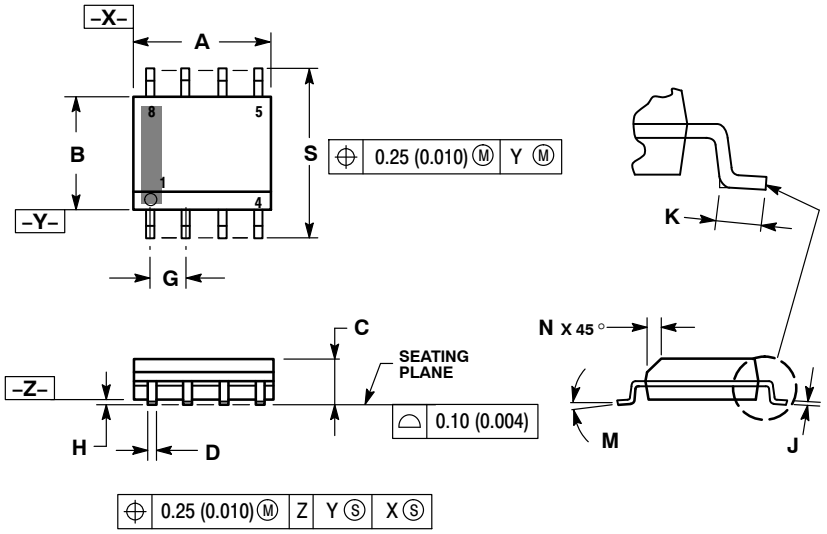


NOTES:
1. DIMENSIONING AND TOLERANCING PER ANSI Y14.5M, 1982.
2. CONTROLLING DIMENSION: MILLIMETER.
3. DIMENSION A AND B DO NOT INCLUDE MOLD PROTRUSION.
4. MAXIMUM MOLD PROTRUSION 0.15 (0.006) PER SIDE.
5. DIMENSION D DOES NOT INCLUDE DAMBAR PROTRUSION. ALLOWABLE DAMBAR PROTRUSION SHALL BE 0.127 (0.005) TOTAL IN EXCESS OF THE D DIMENSION AT MAXIMUM MATERIAL CONDITION.
6. 751−01 THRU 751−06 ARE OBSOLETE. NEW STANDARD IS 751−07.

| | MILLIMETERS | | INCHES | |
|---|---|---|---|---|
| DIM | MIN | MAX | MIN | MAX |
| A | 4.80 | 5.00 | 0.189 | 0.197 |
| B | 3.80 | 4.00 | 0.150 | 0.157 |
| C | 1.35 | 1.75 | 0.053 | 0.069 |
| D | 0.33 | 0.51 | 0.013 | 0.020 |
| G | 1.27 BSC | | 0.050 BSC | |
| H | 0.10 | 0.25 | 0.004 | 0.010 |
| J | 0.19 | 0.25 | 0.007 | 0.010 |
| K | 0.40 | 1.27 | 0.016 | 0.050 |
| M | 0 ° | 8 ° | 0 ° | 8 ° |
| N | 0.25 | 0.50 | 0.010 | 0.020 |
| S | 5.80 | 6.20 | 0.228 | 0.244 |

### SOLDERING FOOTPRINT*

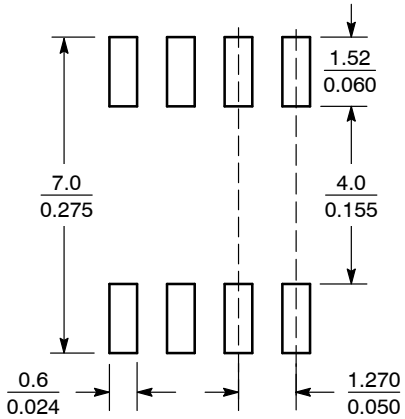


SCALE 6:1 (mm / inches)

*For additional information on our Pb−Free strategy and soldering details, please download the ON Semiconductor Soldering and Mounting Techniques Reference Manual, SOLDERRM/D.

### GENERIC MARKING DIAGRAM*

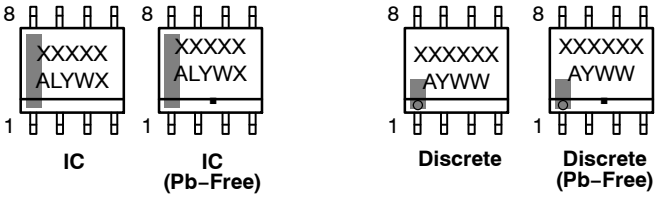


IC | IC (Pb−Free) | Discrete | Discrete (Pb−Free)

XXXXX = Specific Device Code
A = Assembly Location
L = Wafer Lot
Y = Year
W = Work Week
▪ = Pb−Free Package

XXXXXX = Specific Device Code
A = Assembly Location
Y = Year
WW = Work Week
▪ = Pb−Free Package

*This information is generic. Please refer to device data sheet for actual part marking. Pb−Free indicator, "G" or microdot "▪", may or may not be present. Some products may not follow the Generic Marking.

**STYLES ON PAGE 2**

| | | |
|---|---|---|
| **DOCUMENT NUMBER:** | **98ASB42564B** | Electronic versions are uncontrolled except when accessed directly from the Document Repository. Printed versions are uncontrolled except when stamped "CONTROLLED COPY" in red. |
| **DESCRIPTION:** | **SOIC−8 NB** | **PAGE 1 OF 2** |

**onsemi** and onsemi are trademarks of Semiconductor Components Industries, LLC dba **onsemi** or its subsidiaries in the United States and/or other countries. **onsemi** reserves the right to make changes without further notice to any products herein. **onsemi** makes no warranty, representation or guarantee regarding the suitability of its products for any particular purpose, nor does **onsemi** assume any liability arising out of the application or use of any product or circuit, and specifically disclaims any and all liability, including without limitation special, consequential or incidental damages. **onsemi** does not convey any license under its patent rights nor the rights of others.

© Semiconductor Components Industries, LLC, 2019

**SOIC−8 NB**
CASE 751−07
ISSUE AK

DATE 16 FEB 2011

STYLE 1:
PIN 1. EMITTER
2. COLLECTOR
3. COLLECTOR
4. EMITTER
5. EMITTER
6. BASE
7. BASE
8. EMITTER

STYLE 2:
PIN 1. COLLECTOR, DIE, #1
2. COLLECTOR, #1
3. COLLECTOR, #2
4. COLLECTOR, #2
5. BASE, #2
6. EMITTER, #2
7. BASE, #1
8. EMITTER, #1

STYLE 3:
PIN 1. DRAIN, DIE #1
2. DRAIN, #1
3. DRAIN, #2
4. DRAIN, #2
5. GATE, #2
6. SOURCE, #2
7. GATE, #1
8. SOURCE, #1

STYLE 4:
PIN 1. ANODE
2. ANODE
3. ANODE
4. ANODE
5. ANODE
6. ANODE
7. ANODE
8. COMMON CATHODE

STYLE 5:
PIN 1. DRAIN
2. DRAIN
3. DRAIN
4. DRAIN
5. GATE
6. GATE
7. SOURCE
8. SOURCE

STYLE 6:
PIN 1. SOURCE
2. DRAIN
3. DRAIN
4. SOURCE
5. SOURCE
6. GATE
7. GATE
8. SOURCE

STYLE 7:
PIN 1. INPUT
2. EXTERNAL BYPASS
3. THIRD STAGE SOURCE
4. GROUND
5. DRAIN
6. GATE 3
7. SECOND STAGE Vd
8. FIRST STAGE Vd

STYLE 8:
PIN 1. COLLECTOR, DIE #1
2. BASE, #1
3. BASE, #2
4. COLLECTOR, #2
5. COLLECTOR, #2
6. EMITTER, #2
7. EMITTER, #1
8. COLLECTOR, #1

STYLE 9:
PIN 1. EMITTER, COMMON
2. COLLECTOR, DIE #1
3. COLLECTOR, DIE #2
4. EMITTER, COMMON
5. EMITTER, COMMON
6. BASE, DIE #2
7. BASE, DIE #1
8. EMITTER, COMMON

STYLE 10:
PIN 1. GROUND
2. BIAS 1
3. OUTPUT
4. GROUND
5. GROUND
6. BIAS 2
7. INPUT
8. GROUND

STYLE 11:
PIN 1. SOURCE 1
2. GATE 1
3. SOURCE 2
4. GATE 2
5. DRAIN 2
6. DRAIN 2
7. DRAIN 1
8. DRAIN 1

STYLE 12:
PIN 1. SOURCE
2. SOURCE
3. SOURCE
4. GATE
5. DRAIN
6. DRAIN
7. DRAIN
8. DRAIN

STYLE 13:
PIN 1. N.C.
2. SOURCE
3. SOURCE
4. GATE
5. DRAIN
6. DRAIN
7. DRAIN
8. DRAIN

STYLE 14:
PIN 1. N−SOURCE
2. N−GATE
3. P−SOURCE
4. P−GATE
5. P−DRAIN
6. P−DRAIN
7. N−DRAIN
8. N−DRAIN

STYLE 15:
PIN 1. ANODE 1
2. ANODE 1
3. ANODE 1
4. ANODE 1
5. CATHODE, COMMON
6. CATHODE, COMMON
7. CATHODE, COMMON
8. CATHODE, COMMON

STYLE 16:
PIN 1. EMITTER, DIE #1
2. BASE, DIE #1
3. EMITTER, DIE #2
4. BASE, DIE #2
5. COLLECTOR, DIE #2
6. COLLECTOR, DIE #2
7. COLLECTOR, DIE #1
8. COLLECTOR, DIE #1

STYLE 17:
PIN 1. VCC
2. V2OUT
3. V1OUT
4. TXE
5. RXE
6. VEE
7. GND
8. ACC

STYLE 18:
PIN 1. ANODE
2. ANODE
3. SOURCE
4. GATE
5. DRAIN
6. DRAIN
7. CATHODE
8. CATHODE

STYLE 19:
PIN 1. SOURCE 1
2. GATE 1
3. SOURCE 2
4. GATE 2
5. DRAIN 2
6. MIRROR 2
7. DRAIN 1
8. MIRROR 1

STYLE 20:
PIN 1. SOURCE (N)
2. GATE (N)
3. SOURCE (P)
4. GATE (P)
5. DRAIN
6. DRAIN
7. DRAIN
8. DRAIN

STYLE 21:
PIN 1. CATHODE 1
2. CATHODE 2
3. CATHODE 3
4. CATHODE 4
5. CATHODE 5
6. COMMON ANODE
7. COMMON ANODE
8. CATHODE 6

STYLE 22:
PIN 1. I/O LINE 1
2. COMMON CATHODE/VCC
3. COMMON CATHODE/VCC
4. I/O LINE 3
5. COMMON ANODE/GND
6. I/O LINE 4
7. I/O LINE 5
8. COMMON ANODE/GND

STYLE 23:
PIN 1. LINE 1 IN
2. COMMON ANODE/GND
3. COMMON ANODE/GND
4. LINE 2 IN
5. LINE 2 OUT
6. COMMON ANODE/GND
7. COMMON ANODE/GND
8. LINE 1 OUT

STYLE 24:
PIN 1. BASE
2. EMITTER
3. COLLECTOR/ANODE
4. COLLECTOR/ANODE
5. CATHODE
6. CATHODE
7. COLLECTOR/ANODE
8. COLLECTOR/ANODE

STYLE 25:
PIN 1. VIN
2. N/C
3. REXT
4. GND
5. IOUT
6. IOUT
7. IOUT
8. IOUT

STYLE 26:
PIN 1. GND
2. dv/dt
3. ENABLE
4. ILIMIT
5. SOURCE
6. SOURCE
7. SOURCE
8. VCC

STYLE 27:
PIN 1. ILIMIT
2. OVLO
3. UVLO
4. INPUT+
5. SOURCE
6. SOURCE
7. SOURCE
8. DRAIN

STYLE 28:
PIN 1. SW_TO_GND
2. DASIC_OFF
3. DASIC_SW_DET
4. GND
5. V_MON
6. VBULK
7. VBULK
8. VIN

STYLE 29:
PIN 1. BASE, DIE #1
2. EMITTER, #1
3. BASE, #2
4. EMITTER, #2
5. COLLECTOR, #2
6. COLLECTOR, #2
7. COLLECTOR, #1
8. COLLECTOR, #1

STYLE 30:
PIN 1. DRAIN 1
2. DRAIN 1
3. GATE 2
4. SOURCE 2
5. SOURCE 1/DRAIN 2
6. SOURCE 1/DRAIN 2
7. SOURCE 1/DRAIN 2
8. GATE 1

| | | | |
|---|---|---|---|
| **DOCUMENT NUMBER:** | **98ASB42564B** | Electronic versions are uncontrolled except when accessed directly from the Document Repository. Printed versions are uncontrolled except when stamped "CONTROLLED COPY" in red. | |
| **DESCRIPTION:** | **SOIC−8 NB** | | **PAGE 2 OF 2** |

**onsemi** and ONSEMI. are trademarks of Semiconductor Components Industries, LLC dba **onsemi** or its subsidiaries in the United States and/or other countries. **onsemi** reserves the right to make changes without further notice to any products herein. **onsemi** makes no warranty, representation or guarantee regarding the suitability of its products for any particular purpose, nor does **onsemi** assume any liability arising out of the application or use of any product or circuit, and specifically disclaims any and all liability, including without limitation special, consequential or incidental damages. **onsemi** does not convey any license under its patent rights nor the rights of others.

© Semiconductor Components Industries, LLC, 2019

**onsemi**, , and other names, marks, and brands are registered and/or common law trademarks of Semiconductor Components Industries, LLC dba "**onsemi**" or its affiliates and/or subsidiaries in the United States and/or other countries. **onsemi** owns the rights to a number of patents, trademarks, copyrights, trade secrets, and other intellectual property. A listing of **onsemi**'s product/patent coverage may be accessed at www.onsemi.com/site/pdf/Patent−Marking.pdf. **onsemi** reserves the right to make changes at any time to any products or information herein, without notice. The information herein is provided "as−is" and **onsemi** makes no warranty, representation or guarantee regarding the accuracy of the information, product features, availability, functionality, or suitability of its products for any particular purpose, nor does **onsemi** assume any liability arising out of the application or use of any product or circuit, and specifically disclaims any and all liability, including without limitation special, consequential or incidental damages. Buyer is responsible for its products and applications using **onsemi** products, including compliance with all laws, regulations and safety requirements or standards, regardless of any support or applications information provided by **onsemi**. "Typical" parameters which may be provided in **onsemi** data sheets and/or specifications can and do vary in different applications and actual performance may vary over time. All operating parameters, including "Typicals" must be validated for each customer application by customer's technical experts. **onsemi** does not convey any license under any of its intellectual property rights nor the rights of others. **onsemi** products are not designed, intended, or authorized for use as a critical component in life support systems or any FDA Class 3 medical devices or medical devices with a same or similar classification in a foreign jurisdiction or any devices intended for implantation in the human body. Should Buyer purchase or use **onsemi** products for any such unintended or unauthorized application, Buyer shall indemnify and hold **onsemi** and its officers, employees, subsidiaries, affiliates, and distributors harmless against all claims, costs, damages, and expenses, and reasonable attorney fees arising out of, directly or indirectly, any claim of personal injury or death associated with such unintended or unauthorized use, even if such claim alleges that **onsemi** was negligent regarding the design or manufacture of the part. **onsemi** is an Equal Opportunity/Affirmative Action Employer. This literature is subject to all applicable copyright laws and is not for resale in any manner.

## ADDITIONAL INFORMATION

**TECHNICAL PUBLICATIONS**:
**Technical Library:** www.onsemi.com/design/resources/technical−documentation
**onsemi Website:** www.onsemi.com

**ONLINE SUPPORT**: www.onsemi.com/support
**For additional information, please contact your local Sales Representative at** www.onsemi.com/support/sales