MC10H601, MC10H601

9-Bit ECL to TTL Translator

ON Semiconductor®

http://onsemi.com

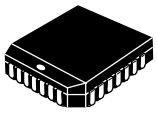

PLCC−28
FN SUFFIX
CASE 776

MARKING DIAGRAM*



xxx	= 10 or 100
A	= Assembly Location
WL	= Wafer Lot
YY	= Year
WW	= Work Week
G	= Pb−Free Package

*For additional marking information, refer to Application Note AND8002/D.

ORDERING INFORMATION

See detailed ordering and shipping information in the package dimensions section on page 4 of this data sheet.

Description

The MC10H/100H601 is a 9−bit, dual supply ECL to TTL translator. Devices in the ON Semiconductor 9−bit translator series utilize the 28−lead PLCC for optimal power pinning, signal flow−through and electrical performance.

The devices feature a 48 mA TTL output stage, and AC performance is specified into both a 50 pF and 200 pF load capacitance. For the 3−state output disable, both ECL and TTL control inputs are provided, allowing maximum design flexibility.

The 10H version is compatible with MECL 10H™ ECL logic levels. The 100H version is compatible with 100K levels.

Features

- 9−Bit Ideal for Byte−Parity Applications
- 3−State TTL Outputs
- Flow−Through Configuration
- Extra TTL and ECL Power Pins to Minimize Switching Noise
- ECL and TTL 3−State Control Inputs
- Dual Supply
- 4.8 ns Max Delay into 50 pF, 9.6 ns into 200 pF (all Outputs Switching)
- PNP TTL Inputs for Low Loading
- Pb−Free Packages are Available*

*For additional information on our Pb−Free strategy and soldering details, please download the ON Semiconductor Soldering and Mounting Techniques Reference Manual, SOLDERRM/D.

© Semiconductor Components Industries, LLC, 2006

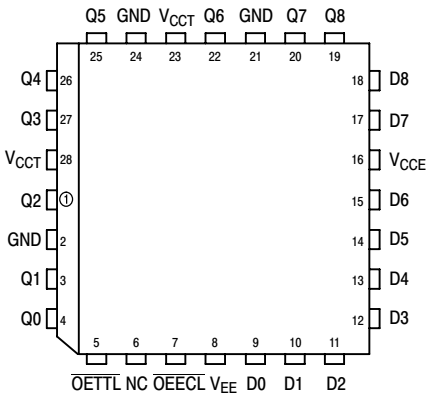

Figure 1. PLCC−28 Pinout (Top View)

Table 1. PIN NAMES

PIN	FUNCTION
GND	TTL Ground (0 V)
V_{CCE}	ECL V_{CC} (0 V)
V_{CCT}	Supply (+5.0 V)
V_{EE}	ECL Supply (−5.2 / −4.5 V)
D0 − D8	Data Inputs (ECL)
Q0 − Q8	Data Outputs (TTL)
$\overline{OEECL}$	3−State Control (ECL)
$\overline{OETTL}$	3−State Control (TTL)

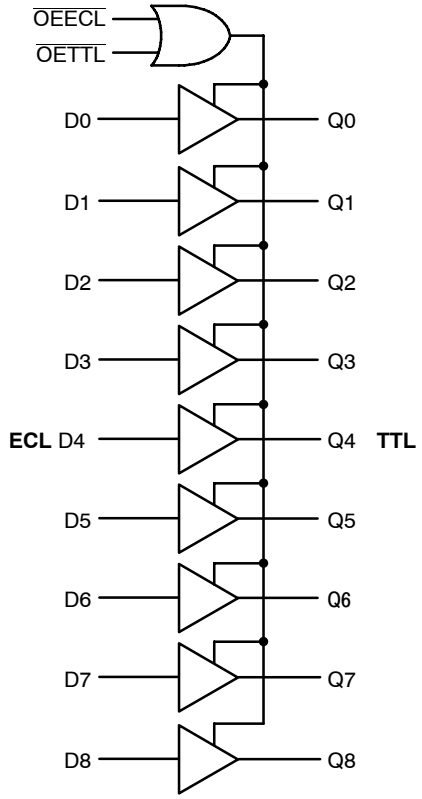

Figure 2. Logic Diagram

Table 2. TRUTH TABLE

$\overline{OEECL}$	$\overline{OETTL}$	D	Q
L	L	L	L
L	L	H	H
H	X	X	Z
X	H	X	Z

Table 3. 10H ECL DC CHARACTERISTICS: V_{CCT} = 5.0 V ± 10%; V_{EE} = −5.2 V ± 5%

Symbol	Parameter	0°C		25°C		85°C		Unit
		Min	Max	Min	Max	Min	Max	
I_{EE}	Power Supply Current		−51		−51		−51	mA
I_{INH} I_{INL}	Input HIGH Current Input LOW Current	 0.5	255	 0.5	175	 0.5	175	μA μA
V_{IH} V_{IL}	Input HIGH Voltage Input LOW Voltage	−1170 −1950	−840 −1480	−1130 −1950	−810 −1480	−1060 −1950	−720 −1445	mV

NOTE: Device will meet the specifications after thermal equilibrium has been established when mounted in a test socket or printed circuit board with maintained transverse airflow greater than 500 lfpm. Electrical parameters are guaranteed only over the declared operating temperature range. Functional operation of the device exceeding these conditions is not implied. Device specification limit values are applied individually under normal operating conditions and not valid simultaneously.

Table 4. 100H ECL DC CHARACTERISTICS: V_{CCT} = 5.0 V ± 10%; V_{EE} = −4.2 V to −5.5 V

Symbol	Parameter	0°C		25°C		85°C		Unit
		Min	Max	Min	Max	Min	Max	
I_{EE}	Power Supply Current		−51		−51		−53	mA
I_{INH} I_{INL}	Input HIGH Current Input LOW Current	 0.5	255	 0.5	175	 0.5	175	μA μA
V_{IH} V_{IL}	Input HIGH Voltage Input LOW Voltage	−1165 −1810	−880 −1475	−1165 −1810	−880 −1475	−1165 −1810	−880 −1475	mV

NOTE: Device will meet the specifications after thermal equilibrium has been established when mounted in a test socket or printed circuit board with maintained transverse airflow greater than 500 lfpm. Electrical parameters are guaranteed only over the declared operating temperature range. Functional operation of the device exceeding these conditions is not implied. Device specification limit values are applied individually under normal operating conditions and not valid simultaneously.

Table 5. TTL DC CHARACTERISTICS: V_{CCT} = 5.0 V ± 10%; V_{EE} = −5.2 V ± 5% (10H version);
V_{EE} = −4.2 V to −5.5 V (100H version)

Symbol	Parameter	Condition	0°C		25°C		85°C		Unit
			Min	Max	Min	Max	Min	Max	
I_{CCH}	Power Supply Current			110		110		110	mA
I_{CCL}				110		110		110	
I_{CCZ}	Power Supply Current			105		105		105	
I_{IH}	Input HIGH Current	V_{IN} = 2.7 V V_{IN} = 7.0 V		20 100		20 100		20 100	μA
I_{IL}	Input LOW Current	V_{IN} = 0.5 V		−0.6		−0.6		−0.6	mA
I_{OS}	Output Short Circuit Current	V_{OUT} = 0 V	−100	−225	−100	−225	−100	−225	mA
I_{OZH} I_{OZL}	Output Disable Current HIGH Output Disable Current LOW	V_{OUT} = 2.7 V V_{OUT} = 0.5 V	 −50	50	 −50	50	 −50	50	μA
V_{IHT} V_{ILT}	Input HIGH Voltage Input LOW Voltage		2.0	 0.8	2.0	 0.8	2.0	 0.8	V
V_{OHT}	Output HIGH Voltage	I_{OH} = −3.0 mA I_{OH} = −15 mA	2.5 2.0		2.5 2.0		2.5 2.0		V
V_{OLT}	Output LOW Voltage	I_{OL} = 48 mA		0.55		0.55		0.55	V
V_{IK}	Input Clamp Voltage	I_{IN} = −18 mA		−1.2		−1.2		−1.2	V

NOTE: Device will meet the specifications after thermal equilibrium has been established when mounted in a test socket or printed circuit board with maintained transverse airflow greater than 500 lfpm. Electrical parameters are guaranteed only over the declared operating temperature range. Functional operation of the device exceeding these conditions is not implied. Device specification limit values are applied individually under normal operating conditions and not valid simultaneously.

Table 6. AC CHARACTERISTICS: V_{CCT} = 5.0 V ± 10%; V_{EE} = −5.2 V ± 5% (10H version); V_{EE} = −4.2 V to −5.5 V (100H version)

Symbol	Parameter		Condition	0°C		25°C		85°C		Unit
				Min	Max	Min	Max	Min	Max	
t_{PLH} t_{PHL}	Propagation Delay to Output		C_L = 50 pF C_L = 200 pF	1.7 3.4	4.8 9.6	1.7 3.4	4.8 9.6	1.7 3.4	4.8 9.6	ns ns
t_{PLZ} t_{PHZ}	Output Disable Time	$\overline{OEECL}$	C_L = 50 pF C_L = 200 pF	3.7 5.4	6.5 13	3.7 5.4	6.5 13	3.7 5.4	6.5 13	ns ns
t_{PLZ} t_{PHZ}		$\overline{OETTL}$	C_L = 50 pF C_L = 200 pF	4.3 7.0	7.5 15	4.3 7.0	7.5 15	4.3 7.0	7.5 15	ns ns
t_{PZL} t_{PZH}	Output Enable Time	$\overline{OEECL}$	C_L = 50 pF C_L = 200 pF	3.5 5.0	6.0 12	3.5 5.0	6.0 12	3.5 5.0	6.0 12	ns ns
t_{PZL} t_{PZH}		$\overline{OETTL}$	C_L = 50 pF C_L = 200 pF	4.2 6.0	7.0 14	4.2 6.0	7.0 14	4.2 6.0	7.0 14	ns ns
t_R t_F	Output Rise/Fall Time 1.0 V − 2.0 V		C_L = 50 pF C_L = 200 pF		1.2 3.0		1.2 3.0		1.2 3.0	ns ns

NOTE: Device will meet the specifications after thermal equilibrium has been established when mounted in a test socket or printed circuit board with maintained transverse airflow greater than 500 lfpm. Electrical parameters are guaranteed only over the declared operating temperature range. Functional operation of the device exceeding these conditions is not implied. Device specification limit values are applied individually under normal operating conditions and not valid simultaneously.

ORDERING INFORMATION

Device	Package	Shipping†
MC10H601FN	PLCC−28	37 Units / Rail
MC10H601FNG	PLCC−28 (Pb−Free)	37 Units / Rail
MC10H601FNR2	PLCC−28	500 / Tape & Reel
MC10H601FNR2G	PLCC−28 (Pb−Free)	500 / Tape & Reel
MC100H601FN	PLCC−28	37 Units / Rail
MC100H601FNG	PLCC−28 (Pb−Free)	37 Units / Rail
MC100H601FNR2	PLCC−28	500 / Tape & Reel
MC100H601FNR2G	PLCC−28 (Pb−Free)	500 / Tape & Reel

†For information on tape and reel specifications, including part orientation and tape sizes, please refer to our Tape and Reel Packaging Specifications Brochure, BRD8011/D.

Resource Reference of Application Notes

AN1405/D – ECL Clock Distribution Techniques

AN1406/D – Designing with PECL (ECL at +5.0 V)

AN1503/D – ECLinPS™ I/O SPiCE Modeling Kit

AN1504/D – Metastability and the ECLinPS Family

AN1568/D – Interfacing Between LVDS and ECL

AN1672/D – The ECL Translator Guide

AND8001/D – Odd Number Counters Design

AND8002/D – Marking and Date Codes

AND8020/D – Termination of ECL Logic Devices

AND8066/D – Interfacing with ECLinPS

AND8090/D – AC Characteristics of ECL Devices

PACKAGE DIMENSIONS

PLCC−28
FN SUFFIX
PLASTIC PLCC PACKAGE
CASE 776−02
ISSUE E

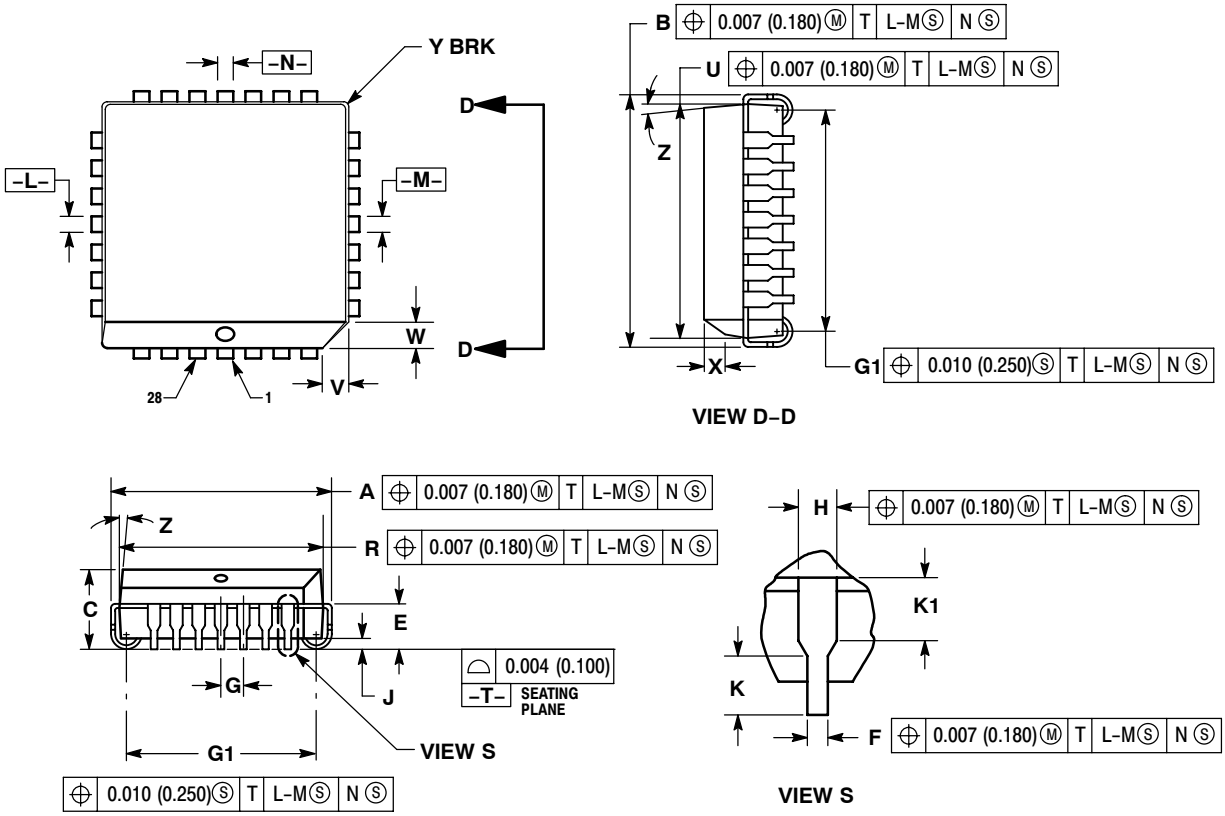

NOTES:
1. DATUMS −L−, −M−, AND −N− DETERMINED WHERE TOP OF LEAD SHOULDER EXITS PLASTIC BODY AT MOLD PARTING LINE.
2. DIMENSION G1, TRUE POSITION TO BE MEASURED AT DATUM −T−, SEATING PLANE.
3. DIMENSIONS R AND U DO NOT INCLUDE MOLD FLASH. ALLOWABLE MOLD FLASH IS 0.010 (0.250) PER SIDE.
4. DIMENSIONING AND TOLERANCING PER ANSI Y14.5M, 1982.
5. CONTROLLING DIMENSION: INCH.
6. THE PACKAGE TOP MAY BE SMALLER THAN THE PACKAGE BOTTOM BY UP TO 0.012 (0.300). DIMENSIONS R AND U ARE DETERMINED AT THE OUTERMOST EXTREMES OF THE PLASTIC BODY EXCLUSIVE OF MOLD FLASH, TIE BAR BURRS, GATE BURRS AND INTERLEAD FLASH, BUT INCLUDING ANY MISMATCH BETWEEN THE TOP AND BOTTOM OF THE PLASTIC BODY.
7. DIMENSION H DOES NOT INCLUDE DAMBAR PROTRUSION OR INTRUSION. THE DAMBAR PROTRUSION(S) SHALL NOT CAUSE THE H DIMENSION TO BE GREATER THAN 0.037 (0.940). THE DAMBAR INTRUSION(S) SHALL NOT CAUSE THE H DIMENSION TO BE SMALLER THAN 0.025 (0.635).

	INCHES		MILLIMETERS	
DIM	MIN	MAX	MIN	MAX
A	0.485	0.495	12.32	12.57
B	0.485	0.495	12.32	12.57
C	0.165	0.180	4.20	4.57
E	0.090	0.110	2.29	2.79
F	0.013	0.019	0.33	0.48
G	0.050 BSC		1.27 BSC	
H	0.026	0.032	0.66	0.81
J	0.020	---	0.51	---
K	0.025	---	0.64	---
R	0.450	0.456	11.43	11.58
U	0.450	0.456	11.43	11.58
V	0.042	0.048	1.07	1.21
W	0.042	0.048	1.07	1.21
X	0.042	0.056	1.07	1.42
Y	---	0.020	---	0.50
Z	2°	10°	2°	10°
G1	0.410	0.430	10.42	10.92
K1	0.040	---	1.02	---

ECLinPS is a trademark of Semiconductor Components Industries, LLC (SCILLC).
MECL 10H is a trademark of Motorola, Inc.

ON Semiconductor and ON are registered trademarks of Semiconductor Components Industries, LLC (SCILLC). SCILLC reserves the right to make changes without further notice to any products herein. SCILLC makes no warranty, representation or guarantee regarding the suitability of its products for any particular purpose, nor does SCILLC assume any liability arising out of the application or use of any product or circuit, and specifically disclaims any and all liability, including without limitation special, consequential or incidental damages. "Typical" parameters which may be provided in SCILLC data sheets and/or specifications can and do vary in different applications and actual performance may vary over time. All operating parameters, including "Typicals" must be validated for each customer application by customer's technical experts. SCILLC does not convey any license under its patent rights nor the rights of others. SCILLC products are not designed, intended, or authorized for use as components in systems intended for surgical implant into the body, or other applications intended to support or sustain life, or for any other application in which the failure of the SCILLC product could create a situation where personal injury or death may occur. Should Buyer purchase or use SCILLC products for any such unintended or unauthorized application, Buyer shall indemnify and hold SCILLC and its officers, employees, subsidiaries, affiliates, and distributors harmless against all claims, costs, damages, and expenses, and reasonable attorney fees arising out of, directly or indirectly, any claim of personal injury or death associated with such unintended or unauthorized use, even if such claim alleges that SCILLC was negligent regarding the design or manufacture of the part. SCILLC is an Equal Opportunity/Affirmative Action Employer. This literature is subject to all applicable copyright laws and is not for resale in any manner.

PUBLICATION ORDERING INFORMATION

LITERATURE FULFILLMENT:
Literature Distribution Center for ON Semiconductor
P.O. Box 5163, Denver, Colorado 80217 USA
Phone: 303−675−2175 or 800−344−3860 Toll Free USA/Canada
Fax: 303−675−2176 or 800−344−3867 Toll Free USA/Canada
Email: orderlit@onsemi.com

N. American Technical Support: 800−282−9855 Toll Free USA/Canada
Europe, Middle East and Africa Technical Support:
Phone: 421 33 790 2910
Japan Customer Focus Center
Phone: 81−3−5773−3850

ON Semiconductor Website: **www.onsemi.com**

Order Literature: http://www.onsemi.com/orderlit

For additional information, please contact your local Sales Representative

MC10H601/D