2.5 V/3.3 V ECL Differential Receiver/Driver

MC10LVEP16, MC100LVEP16

ON Semiconductor®

www.onsemi.com



SOIC−8 NB
D SUFFIX
CASE 751−07



TSSOP−8
DT SUFFIX
CASE 948R−02

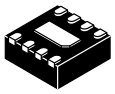

DFN8
MN SUFFIX
CASE 506AA

Description

The MC10/100LVEP16 is a world class differential receiver/driver. The device is functionally equivalent to the EL16, EP16 and LVEL16 devices. With output transition times significantly faster than the EL16 and LVEL16, the LVEP16 is ideally suited for interfacing with high frequency and low voltage (2.5 V) sources. Single-Ended CLK input operation is limited to a $V_{CC} \geq 3.0$ V in PECL mode, or $V_{EE} \leq -3.0$ V in NECL mode.

The V_{BB} pin, an internally generated Voltage supply, is available to this device only. For Single-Ended input conditions, the unused differential input is connected to V_{BB} as a switching reference voltage. V_{BB} may also rebias AC coupled inputs. When used, decouple V_{BB} and V_{CC} via a 0.01 μF capacitor and limit current sourcing or sinking to 0.5 mA. When not used, V_{BB} should be left open.

The 100 Series contains temperature compensation.

Features

- 240 ps Propagation Delay
- Maximum Frequency = > 4 GHz Typical
- PECL Mode Operating Range:
  V_{CC} = 2.375 V to 3.8 V with V_{EE} = 0 V
- NECL Mode Operating Range:
  V_{CC} = 0 V with V_{EE} = −2.375 V to −3.8 V
- V_{BB} Output
- Open Input Default State
- LVDS Input Compatible
- These Devices are Pb-Free, Halogen Free and are RoHS Compliant

MARKING DIAGRAMS*

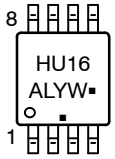

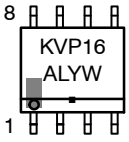

SOIC−8 NB

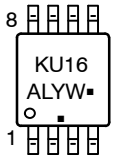

TSSOP−8

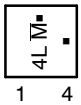

DFN8

H = MC10
K = MC100
4L = MC100
M = Date Code
A = Assembly Location
L = Wafer Lot
Y = Year
W = Work Week
▪ = Pb-Free Package
(Note: Microdot may be in either location)

*For additional marking information, refer to Application Note AND8002/D.

ORDERING INFORMATION

See detailed ordering and shipping information in the package dimensions section on page 7 of this data sheet.

© Semiconductor Components Industries, LLC, 2016

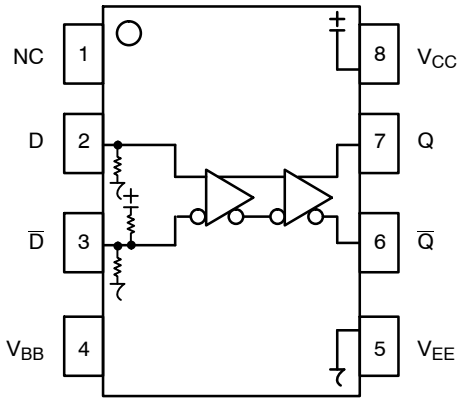

Figure 1. 8-Lead Pinout (Top View) **and Logic Diagram**

Table 1. PIN DESCRIPTION

Pin	Function
D*, $\overline{D}$**	ECL Data Inputs
Q, $\overline{Q}$	ECL Data Outputs
V_{BB}	Ref. Voltage Output
V_{CC}	Positive Supply
V_{EE}	Negative Supply
NC	No Connect
EP	(DFN8 only) Thermal exposed pad must be connected to a sufficient thermal conduit. Electrically connect to the most negative supply (GND) or leave unconnected, floating open.

* Pins will default LOW when left open.
**Pins will default to $V_{CC}/2$ when left open.

Table 2. ATTRIBUTES

Characteristics	Value
Internal Input Pulldown Resistor	75 kΩ
Internal Input Pullup Resistor	37.5 kΩ
ESD Protection Human Body Model Machine Model Charged Device Model	 > 4 kV > 200 V > 2 kV
Moisture Sensitivity, Indefinite Time Out of Drypack (Note 1)	Pb-Free Pkg
SOIC−8 NB TSSOP−8 DFN8	Level 1 Level 3 Level 1
Flammability Rating Oxygen Index: 28 to 34	 UL 94 V−0 @ 0.125 in
Transistor Count	167 Devices
Meets or exceeds JEDEC Spec EIA/JESD78 IC Latchup Test	

1. For additional information, see Application Note AND8003/D.

Table 3. MAXIMUM RATINGS

Symbol	Parameter	Condition 1	Condition 2	Rating	Unit
V_{CC}	PECL Mode Power Supply	V_{EE} = 0 V		6	V
V_{EE}	NECL Mode Power Supply	V_{CC} = 0 V		−6	V
V_I	PECL Mode Input Voltage NECL Mode Input Voltage	V_{EE} = 0 V V_{CC} = 0 V	$V_I \le V_{CC}$ $V_I \ge V_{EE}$	6 −6	V
I_{out}	Output Current	Continuous Surge		50 100	mA
I_{BB}	V_{BB} Sink/Source			±0.5	mA
T_A	Operating Temperature Range			−40 to +85	°C
T_{stg}	Storage Temperature Range			−65 to +150	°C
θ_{JA}	Thermal Resistance (Junction-to-Ambient)	0 lfpm 500 lfpm	SOIC−8 NB SOIC−8 NB	190 130	°C/W
θ_{JC}	Thermal Resistance (Junction-to-Case)	Standard Board	SOIC−8 NB	41 to 44	°C/W
θ_{JA}	Thermal Resistance (Junction-to-Ambient)	0 lfpm 500 lfpm	TSSOP−8 TSSOP−8	185 140	°C/W
θ_{JC}	Thermal Resistance (Junction-to-Case)	Standard Board	TSSOP−8	41 to 44	°C/W
θ_{JA}	Thermal Resistance (Junction-to-Ambient)	0 lfpm 500 lfpm	DFN8 DFN8	129 84	°C/W
θ_{JC}	Thermal Resistance (Junction-to-Case)	(Note 1)	DFN8	35 to 40	°C/W
T_{sol}	Wave Solder (Pb-Free)	< 2 to 3 sec @ 260°C		265	°C

Stresses exceeding those listed in the Maximum Ratings table may damage the device. If any of these limits are exceeded, device functionality should not be assumed, damage may occur and reliability may be affected.

1. JEDEC standard multilayer board − 2S2P (2 signal, 2 power).

Table 4. 10EP DC CHARACTERISTICS, PECL (V_{CC} = 2.5 V, V_{EE} = 0 V (Note 1))

Symbol	Characteristic	−40°C			25°C			85°C			Unit
		Min	Typ	Max	Min	Typ	Max	Min	Typ	Max	
I_{EE}	Power Supply Current	17	22	27	17	22	27	17	22	28	mA
V_{OH}	Output HIGH Voltage (Note 2)	1365	1490	1615	1430	1555	1680	1490	1615	1740	mV
V_{OL}	Output LOW Voltage (Note 2)	565	740	865	630	805	930	690	865	990	mV
V_{IHCMR}	Input HIGH Voltage Common Mode Range (Differential Configuration) (Notes 3, 4)	1.2		2.5	1.2		2.5	1.2		2.5	V
I_{IH}	Input HIGH Current			150			150			150	μA
I_{IL}	Input LOW Current D $\overline{D}$	 0.5 −150			 0.5 −150			 0.5 −150			μA

NOTE: Device will meet the specifications after thermal equilibrium has been established when mounted in a test socket or printed circuit board with maintained transverse airflow greater than 500 lfpm.

1. Input and output parameters vary 1:1 with V_{CC}. V_{EE} can vary +0.125 V to −1.3 V.
2. All loading with 50 Ω to V_{CC} − 2.0 V.
3. Do not use V_{BB} at V_{CC} < 3.0 V. Single ended input CLK pin operation is limited to $V_{CC} \ge 3.0$ V in PECL mode.
4. V_{IHCMR} min varies 1:1 with V_{EE}, V_{IHCMR} max varies 1:1 with V_{CC}. The V_{IHCMR} range is referenced to the most positive side of the differential input signal.

Table 5. 10EP DC CHARACTERISTICS, PECL (V_{CC} = 3.3 V, V_{EE} = 0 V (Note 1))

Symbol	Characteristic	−40°C			25°C			85°C			Unit
		Min	Typ	Max	Min	Typ	Max	Min	Typ	Max	
I_{EE}	Power Supply Current	17	22	27	17	22	27	17	22	28	mA
V_{OH}	Output HIGH Voltage (Note 2)	2165	2290	2415	2230	2355	2480	2290	2415	2540	mV
V_{OL}	Output LOW Voltage (Note 2)	1365	1540	1665	1430	1605	1730	1490	1665	1790	mV
V_{IH}	Input HIGH Voltage (Single Ended)	2090		2415	2155		2480	2215		2540	mV
V_{IL}	Input LOW Voltage (Single Ended)	1365		1690	1430		1755	1490		1815	mV
V_{BB}	Output Voltage Reference (Note 3)	1790	1890	1990	1855	1955	2055	1915	2015	2115	mV
V_{IHCMR}	Input HIGH Voltage Common Mode Range (Differential Configuration) (Note 4)	1.2		3.3	1.2		3.3	1.2		3.3	V
I_{IH}	Input HIGH Current			150			150			150	μA
I_{IL}	Input LOW Current D $\overline{D}$	 0.5 −150			 0.5 −150			 0.5 −150			μA

NOTE: Device will meet the specifications after thermal equilibrium has been established when mounted in a test socket or printed circuit board with maintained transverse airflow greater than 500 lfpm.

1. Input and output parameters vary 1:1 with V_{CC}. V_{EE} can vary +0.925 V to −0.5 V.
2. All loading with 50 Ω to V_{CC} − 2.0 V.
3. Single ended input CLK pin operation is limited to $V_{CC} \geq 3.0$ V in PECL mode.
4. V_{IHCMR} min varies 1:1 with V_{EE}, V_{IHCMR} max varies 1:1 with V_{CC}. The V_{IHCMR} range is referenced to the most positive side of the differential input signal.

Table 6. 10EP DC CHARACTERISTICS, NECL (V_{CC} = 0 V, V_{EE} = −3.8 V to −2.375 V (Note 1))

Symbol	Characteristic	−40°C			25°C			85°C			Unit
		Min	Typ	Max	Min	Typ	Max	Min	Typ	Max	
I_{EE}	Power Supply Current	17	22	27	17	22	27	17	22	28	mA
VOH	Output HIGH Voltage (Note 2)	−1135	−1010	−885	−1070	−945	−820	−1010	−885	−760	mV
V_{OL}	Output LOW Voltage (Note 2)	−1935	−1760	−1635	−1870	−1695	−1570	−1810	−1635	−1510	mV
V_{IH}	Input HIGH Voltage (Single Ended)	−1210		−885	−1145		−820	−1085		−760	mV
V_{IL}	Input LOW Voltage (Single Ended)	−1935		−1610	−1870		−1545	−1810		−1485	mV
V_{BB}	Output Voltage Reference (Note 3)	−1510	−1410	−1310	−1445	−1345	−1245	−1385	−1285	−1185	mV
V_{IHCMR}	Input HIGH Voltage Common Mode Range (Differential Configuration) (Note 4)	V_{EE}+1.2		0.0	V_{EE}+1.2		0.0	V_{EE}+1.2		0.0	V
I_{IH}	Input HIGH Current			150			150			150	μA
I_{IL}	Input LOW Current D $\overline{D}$	 0.5 −150			 0.5 −150			 0.5 −150			μA

NOTE: Device will meet the specifications after thermal equilibrium has been established when mounted in a test socket or printed circuit board with maintained transverse airflow greater than 500 lfpm.

1. Input and output parameters vary 1:1 with V_{CC}.
2. All loading with 50 Ω to V_{CC} − 2.0 V.
3. Single ended input CLK pin operation is limited to $V_{EE} \leq -3.0$ V in NECL mode.
4. V_{IHCMR} min varies 1:1 with V_{EE}, V_{IHCMR} max varies 1:1 with V_{CC}. The V_{IHCMR} range is referenced to the most positive side of the differential input signal.

Table 7. 100EP DC CHARACTERISTICS, PECL (V_{CC} = 2.5 V, V_{EE} = 0 V (Note 1))

Symbol	Characteristic	−40°C			25°C			85°C			Unit
		Min	Typ	Max	Min	Typ	Max	Min	Typ	Max	
I_{EE}	Power Supply Current	19	24	29	22	28	34	24	30	36	mA
V_{OH}	Output HIGH Voltage (Note 2)	1355	1480	1605	1355	1480	1605	1355	1480	1605	mV
V_{OL}	Output LOW Voltage (Note 2)	555	730	900	555	730	900	555	730	900	mV
V_{IHCMR}	Input HIGH Voltage Common Mode Range (Differential Configuration) (Notes 3, 4)	1.2		3.3	1.2		3.3	1.2		3.3	V
I_{IH}	Input HIGH Current			150			150			150	μA
I_{IL}	Input LOW Current D $\overline{D}$	0.5 −150			0.5 −150			0.5 −150			μA

NOTE: Device will meet the specifications after thermal equilibrium has been established when mounted in a test socket or printed circuit board with maintained transverse airflow greater than 500 lfpm.

1. Input and output parameters vary 1:1 with V_{CC}. V_{EE} can vary +0.125 V to −1.3 V.
2. All loading with 50 Ω to V_{CC} − 2.0 V.
3. Do not use V_{BB} at V_{CC} < 3.0 V. Single ended input CLK pin operation is limited to $V_{CC} \geq$ 3.0 V in PECL mode.
4. V_{IHCMR} min varies 1:1 with V_{EE}, V_{IHCMR} max varies 1:1 with V_{CC}. The V_{IHCMR} range is referenced to the most positive side of the differential input signal.

Table 8. 100EP DC CHARACTERISTICS, PECL (V_{CC} = 3.3 V, V_{EE} = 0 V (Note 1))

Symbol	Characteristic	−40°C			25°C			85°C			Unit
		Min	Typ	Max	Min	Typ	Max	Min	Typ	Max	
I_{EE}	Power Supply Current	19	24	29	22	28	34	24	30	36	mA
V_{OH}	Output HIGH Voltage (Note 2)	2155	2280	2405	2155	2280	2405	2155	2280	2405	mV
V_{OL}	Output LOW Voltage (Note 2)	1355	1530	1700	1355	1530	1700	1355	1530	1700	mV
V_{IH}	Input HIGH Voltage (Single Ended)	2135		2420	2135		2420	2135		2420	mV
V_{IL}	Input LOW Voltage (Single Ended)	1355		1700	1355		1700	1355		1700	mV
V_{BB}	Output Voltage Reference (Note 3)	1775	1875	1975	1775	1875	1975	1775	1875	1975	mV
V_{IHCMR}	Input HIGH Voltage Common Mode Range (Differential Configuration) (Note 4)	1.2		3.3	1.2		3.3	1.2		3.3	V
I_{IH}	Input HIGH Current			150			150			150	μA
I_{IL}	Input LOW Current D $\overline{D}$	0.5 −150			0.5 −150			0.5 −150			μA

NOTE: Device will meet the specifications after thermal equilibrium has been established when mounted in a test socket or printed circuit board with maintained transverse airflow greater than 500 lfpm.

1. Input and output parameters vary 1:1 with V_{CC}. V_{EE} can vary +0.925 V to −0.5 V.
2. All loading with 50 Ω to V_{CC} − 2.0 V.
3. Single ended input CLK pin operation is limited to $V_{CC} \geq$ 3.0 V in PECL mode.
4. V_{IHCMR} min varies 1:1 with V_{EE}, V_{IHCMR} max varies 1:1 with V_{CC}. The V_{IHCMR} range is referenced to the most positive side of the differential input signal.

Table 9. 100EP DC CHARACTERISTICS, NECL (V_{CC} = 0 V, V_{EE} = −3.8 V to −2.375 V (Note 1))

Symbol	Characteristic	−40°C			25°C			85°C			Unit
		Min	Typ	Max	Min	Typ	Max	Min	Typ	Max	
I_{EE}	Power Supply Current	19	24	29	22	28	34	24	30	36	mA
V_{OH}	Output HIGH Voltage (Note 2)	−1145	−1020	−895	−1145	−1020	−895	−1145	−1020	−895	mV
V_{OL}	Output LOW Voltage (Note 2)	−1945	−1770	−1600	−1945	−1770	−1600	−1945	−1770	−1600	mV
V_{IH}	Input HIGH Voltage (Single Ended)	−1165		−880	−1165		−880	−1165		−880	mV
V_{IL}	Input LOW Voltage (Single Ended)	−1945		−1600	−1945		−1600	−1945		−1600	mV
V_{BB}	Output Voltage Reference (Note 3)	−1525	−1425	−1325	−1525	−1425	−1325	−1525	−1425	−1325	mV
V_{IHCMR}	Input HIGH Voltage Common Mode Range (Differential Configuration) (Note 4)	V_{EE}+1.2		0.0	V_{EE}+1.2		0.0	V_{EE}+1.2		0.0	V
I_{IH}	Input HIGH Current			150			150			150	μA
I_{IL}	Input LOW Current D $\overline{D}$	 0.5 −150			 0.5 −150			 0.5 −150			μA

NOTE: Device will meet the specifications after thermal equilibrium has been established when mounted in a test socket or printed circuit board with maintained transverse airflow greater than 500 lfpm.

1. Input and output parameters vary 1:1 with V_{CC}.
2. All loading with 50 Ω to V_{CC} − 2.0 V.
3. Single ended input CLK pin operation is limited to $V_{EE} \le -3.0$ V in NECL mode.
4. V_{IHCMR} min varies 1:1 with V_{EE}, V_{IHCMR} max varies 1:1 with V_{CC}. The V_{IHCMR} range is referenced to the most positive side of the differential input signal.

Table 10. AC CHARACTERISTICS (V_{CC} = 0 V; V_{EE} = −3.8 V to −2.375 V or V_{CC} = 2.375 V to 3.8 V; V_{EE} = 0 V (Note 1))

Symbol	Characteristic	−40°C			25°C			85°C			Unit
		Min	Typ	Max	Min	Typ	Max	Min	Typ	Max	
f_{max}	Maximum Frequency (See Figure 2. F_{max}/JITTER)		> 4			> 4			> 4		GHz
t_{PLH}, t_{PHL}	Propagation Delay to Output Differential	150	220	300	170	240	320	190	260	330	ps
t_{SKEW}	Duty Cycle Skew (Note 2)		5.0	20		5.0	20		5.0	20	ps
t_{JITTER}	CLOCK Random Jitter (RMS) @ ≤ 1.0 GHz @ ≤ 1.5 GHz @ ≤ 2.0 GHz @ ≤ 2.5 GHz @ ≤ 3.0 GHz @ ≤ 3.5 GHz		 0.134 0.077 0.115 0.117 0.122 0.123	 0.2 0.2 0.2 0.2 0.2 0.2		 0.147 0.104 0.141 0.132 0.143 0.145	 0.3 0.3 0.3 0.3 0.3 0.3		 0.166 0.145 0.153 0.156 0.177 0.202	 0.3 0.3 0.3 0.3 0.3 0.3	ps
V_{PP}	Input Voltage Swing (Differential Configuration)	150	800	1200	150	800	1200	150	800	1200	mV
t_r t_f	Output Rise/Fall Times Q, $\overline{Q}$ (20% − 80%)	70	120	170	80	130	180	100	150	200	ps

NOTE: Device will meet the specifications after thermal equilibrium has been established when mounted in a test socket or printed circuit board with maintained transverse airflow greater than 500 lfpm.

1. Measured using a 750 mV source, 50% duty cycle clock source. All loading with 50 Ω to V_{CC} − 2.0 V.
2. Skew is measured between outputs under identical transitions. Duty cycle skew is defined only for differential operation when the delays are measured from the cross point of the inputs to the cross point of the outputs.

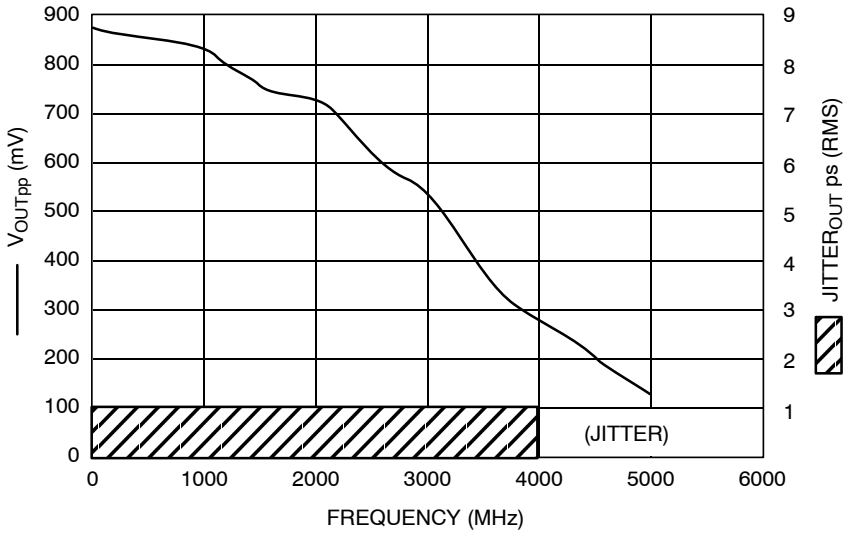

Figure 2. F_{max}/Jitter

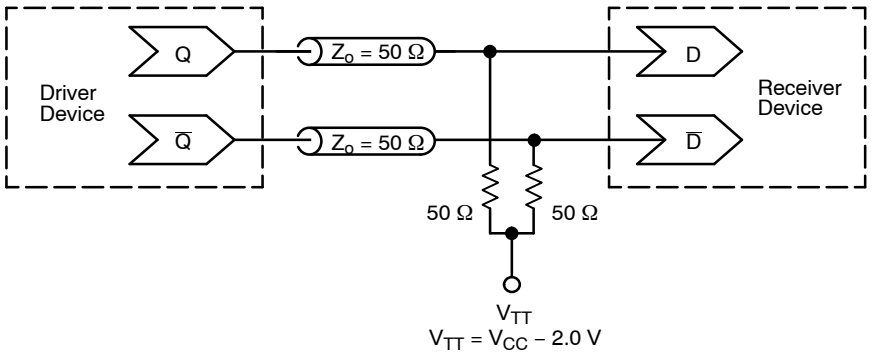

Figure 3. Typical Termination for Output Driver and Device Evaluation
(See Application Note AND8020/D – Termination of ECL Logic Devices)

ORDERING INFORMATION

Device	Package	Shipping†
MC10LVEP16DTR2G	TSSOP−8 (Pb-Free)	2500 / Tape & Reel
MC100LVEP16DG	SOIC−8 NB (Pb-Free)	98 Units / Tube
MC100LVEP16DR2G	SOIC−8 NB (Pb-Free)	2500 / Tape & Reel
MC100LVEP16DTG	TSSOP−8 (Pb-Free)	100 Units / Tube
MC100LVEP16DTR2G	TSSOP−8 (Pb-Free)	2500 / Tape & Reel
MC100LVEP16MNR4G	DFN8 (Pb-Free)	1000 / Tape & Reel

†For information on tape and reel specifications, including part orientation and tape sizes, please refer to our Tape and Reel Packaging Specifications Brochure, BRD8011/D.

Resource Reference of Application Notes

AN1405/D – ECL Clock Distribution Techniques

AN1406/D – Designing with PECL (ECL at +5.0 V)

AN1503/D – ECLinPS™ I/O SPiCE Modeling Kit

AN1504/D – Metastability and the ECLinPS Family

AN1568/D – Interfacing Between LVDS and ECL

AN1672/D – The ECL Translator Guide

AND8001/D – Odd Number Counters Design

AND8002/D – Marking and Date Codes

AND8020/D – Termination of ECL Logic Devices

AND8066/D – Interfacing with ECLinPS

AND8090/D – AC Characteristics of ECL Devices

ECLinPS is a trademark of Semiconductor Components Industries, LLC (SCILLC) or its subsidiaries in the United States and/or other countries.

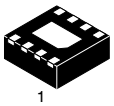

SCALE 4:1

DFN8 2x2, 0.5P
CASE 506AA
ISSUE F

DATE 04 MAY 2016

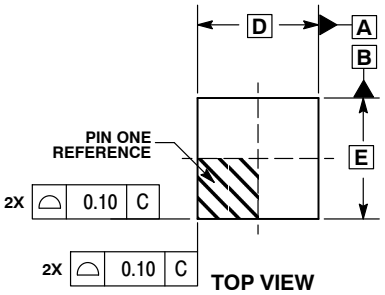

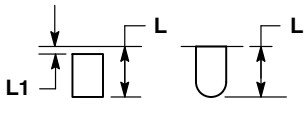

DETAIL A
OPTIONAL CONSTRUCTIONS

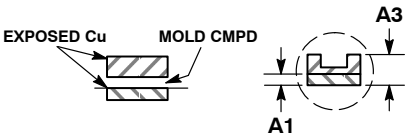

DETAIL B
ALTERNATE CONSTRUCTIONS

NOTES:
1. DIMENSIONING AND TOLERANCING PER ASME Y14.5M, 1994 .
2. CONTROLLING DIMENSION: MILLIMETERS.
3. DIMENSION b APPLIES TO PLATED TERMINAL AND IS MEASURED BETWEEN 0.15 AND 0.20 MM FROM TERMINAL TIP.
4. COPLANARITY APPLIES TO THE EXPOSED PAD AS WELL AS THE TERMINALS.

	MILLIMETERS	
DIM	MIN	MAX
A	0.80	1.00
A1	0.00	0.05
A3	0.20 REF	
b	0.20	0.30
D	2.00 BSC	
D2	1.10	1.30
E	2.00 BSC	
E2	0.70	0.90
e	0.50 BSC	
K	0.30 REF	
L	0.25	0.35
L1	---	0.10

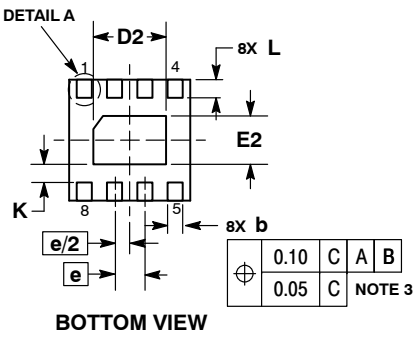

BOTTOM VIEW

RECOMMENDED SOLDERING FOOTPRINT*

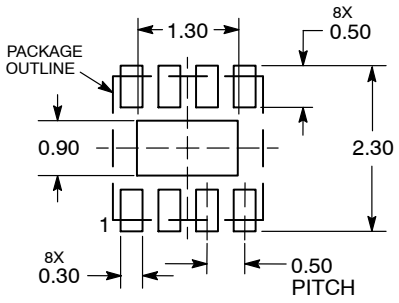

DIMENSIONS: MILLIMETERS

*For additional information on our Pb−Free strategy and soldering details, please download the **onsemi** Soldering and Mounting Techniques Reference Manual, SOLDERRM/D.

GENERIC MARKING DIAGRAM*

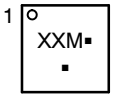

XX = Specific Device Code
M = Date Code
▪ = Pb−Free Device

*This information is generic. Please refer to device data sheet for actual part marking. Pb−Free indicator, “G” or microdot “▪”, may or may not be present. Some products may not follow the Generic Marking.

DOCUMENT NUMBER:	**98AON18658D**	Electronic versions are uncontrolled except when accessed directly from the Document Repository. Printed versions are uncontrolled except when stamped “CONTROLLED COPY” in red.	
DESCRIPTION:	**DFN8, 2.0X2.0, 0.5MM PITCH**		**PAGE 1 OF 1**

onsemi and onsemi are trademarks of Semiconductor Components Industries, LLC dba **onsemi** or its subsidiaries in the United States and/or other countries. **onsemi** reserves the right to make changes without further notice to any products herein. **onsemi** makes no warranty, representation or guarantee regarding the suitability of its products for any particular purpose, nor does **onsemi** assume any liability arising out of the application or use of any product or circuit, and specifically disclaims any and all liability, including without limitation special, consequential or incidental damages. **onsemi** does not convey any license under its patent rights nor the rights of others.

© Semiconductor Components Industries, LLC, 2016

TSSOP 8
CASE 948R–02
ISSUE A

DATE 04/07/2000

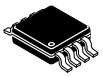

SCALE 2:1

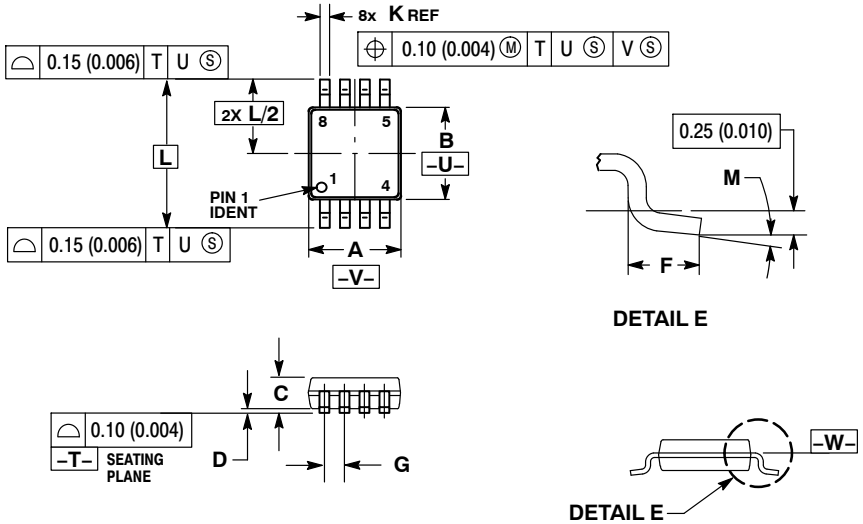

NOTES:
1. DIMENSIONING AND TOLERANCING PER ANSI Y14.5M, 1982.
2. CONTROLLING DIMENSION: MILLIMETER.
3. DIMENSION A DOES NOT INCLUDE MOLD FLASH. PROTRUSIONS OR GATE BURRS. MOLD FLASH OR GATE BURRS SHALL NOT EXCEED 0.15 (0.006) PER SIDE.
4. DIMENSION B DOES NOT INCLUDE INTERLEAD FLASH OR PROTRUSION. INTERLEAD FLASH OR PROTRUSION SHALL NOT EXCEED 0.25 (0.010) PER SIDE.
5. TERMINAL NUMBERS ARE SHOWN FOR REFERENCE ONLY.
6. DIMENSION A AND B ARE TO BE DETERMINED AT DATUM PLANE –W–.

	MILLIMETERS		INCHES	
DIM	MIN	MAX	MIN	MAX
A	2.90	3.10	0.114	0.122
B	2.90	3.10	0.114	0.122
C	0.80	1.10	0.031	0.043
D	0.05	0.15	0.002	0.006
F	0.40	0.70	0.016	0.028
G	0.65 BSC		0.026 BSC	
K	0.25	0.40	0.010	0.016
L	4.90 BSC		0.193 BSC	
M	0°	6°	0°	6°

ON Semiconductor and ON are trademarks of Semiconductor Components Industries, LLC dba ON Semiconductor or its subsidiaries in the United States and/or other countries. ON Semiconductor reserves the right to make changes without further notice to any products herein. ON Semiconductor makes no warranty, representation or guarantee regarding the suitability of its products for any particular purpose, nor does ON Semiconductor assume any liability arising out of the application or use of any product or circuit, and specifically disclaims any and all liability, including without limitation special, consequential or incidental damages. ON Semiconductor does not convey any license under its patent rights nor the rights of others.

© Semiconductor Components Industries, LLC, 2019

onsemi, , and other names, marks, and brands are registered and/or common law trademarks of Semiconductor Components Industries, LLC dba "**onsemi**" or its affiliates and/or subsidiaries in the United States and/or other countries. **onsemi** owns the rights to a number of patents, trademarks, copyrights, trade secrets, and other intellectual property. A listing of **onsemi**'s product/patent coverage may be accessed at www.onsemi.com/site/pdf/Patent−Marking.pdf. **onsemi** reserves the right to make changes at any time to any products or information herein, without notice. The information herein is provided "as−is" and **onsemi** makes no warranty, representation or guarantee regarding the accuracy of the information, product features, availability, functionality, or suitability of its products for any particular purpose, nor does **onsemi** assume any liability arising out of the application or use of any product or circuit, and specifically disclaims any and all liability, including without limitation special, consequential or incidental damages. Buyer is responsible for its products and applications using **onsemi** products, including compliance with all laws, regulations and safety requirements or standards, regardless of any support or applications information provided by **onsemi**. "Typical" parameters which may be provided in **onsemi** data sheets and/or specifications can and do vary in different applications and actual performance may vary over time. All operating parameters, including "Typicals" must be validated for each customer application by customer's technical experts. **onsemi** does not convey any license under any of its intellectual property rights nor the rights of others. **onsemi** products are not designed, intended, or authorized for use as a critical component in life support systems or any FDA Class 3 medical devices or medical devices with a same or similar classification in a foreign jurisdiction or any devices intended for implantation in the human body. Should Buyer purchase or use **onsemi** products for any such unintended or unauthorized application, Buyer shall indemnify and hold **onsemi** and its officers, employees, subsidiaries, affiliates, and distributors harmless against all claims, costs, damages, and expenses, and reasonable attorney fees arising out of, directly or indirectly, any claim of personal injury or death associated with such unintended or unauthorized use, even if such claim alleges that **onsemi** was negligent regarding the design or manufacture of the part. **onsemi** is an Equal Opportunity/Affirmative Action Employer. This literature is subject to all applicable copyright laws and is not for resale in any manner.

ADDITIONAL INFORMATION

TECHNICAL PUBLICATIONS:
Technical Library: www.onsemi.com/design/resources/technical−documentation
onsemi Website: www.onsemi.com

ONLINE SUPPORT: www.onsemi.com/support
For additional information, please contact your local Sales Representative at www.onsemi.com/support/sales