MC14012B

Dual 4-Input NAND Gates

The MC14012B dual 4−input NAND gates are constructed with P−Channel and N−Channel enhancement mode devices in a single monolithic structure (Complementary MOS). Their primary use is where low power dissipation and/or high noise immunity is desired.

Features

- Supply Voltage Range = 3.0 Vdc to 18 Vdc
- All Outputs Buffered
- Capable of Driving Two Low−Power TTL Loads or One Low−Power Schottky TTL Load Over the Rated Temperature Range
- Double Diode Protection on All Inputs
- Pin−for−Pin Replacements for Corresponding CD4000 Series B Suffix Devices
- NLV Prefix for Automotive and Other Applications Requiring Unique Site and Control Change Requirements; AEC−Q100 Qualified and PPAP Capable
- This Device is Pb−Free and is RoHS Compliant

MAXIMUM RATINGS (Voltages Referenced to V_{SS})

Symbol	Parameter	Value	Unit
V_{DD}	DC Supply Voltage Range	−0.5 to +18.0	V
V_{in}, V_{out}	Input or Output Voltage Range (DC or Transient)	−0.5 to V_{DD} + 0.5	V
I_{in}, I_{out}	Input or Output Current (DC or Transient) per Pin	±10	mA
P_D	Power Dissipation, per Package (Note 1)	500	mW
T_A	Ambient Temperature Range	−55 to +125	°C
T_{stg}	Storage Temperature Range	−65 to +150	°C
T_L	Lead Temperature (8−Second Soldering)	260	°C

Stresses exceeding those listed in the Maximum Ratings table may damage the device. If any of these limits are exceeded, device functionality should not be assumed, damage may occur and reliability may be affected.

1. Temperature Derating: “D/DW” Package: –7.0 mW/°C From 65°C To 125°C

This device contains protection circuitry to guard against damage due to high static voltages or electric fields. However, precautions must be taken to avoid applications of any voltage higher than maximum rated voltages to this high−impedance circuit. For proper operation, V_{in} and V_{out} should be constrained to the range $V_{SS} \le (V_{in}$ or $V_{out}) \le V_{DD}$.

Unused inputs must always be tied to an appropriate logic voltage level (e.g., either V_{SS} or V_{DD}). Unused outputs must be left open.

ON Semiconductor®

http://onsemi.com



SOIC−14
D SUFFIX
CASE 751A

MARKING DIAGRAM

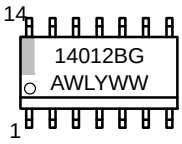

A = Assembly Location
WL, L = Wafer Lot
YY, Y = Year
WW, W = Work Week
G = Pb−Free Package

ORDERING INFORMATION

See detailed ordering and shipping information in the package dimensions section on page 2 of this data sheet.

© Semiconductor Components Industries, LLC, 2014

MC14012B
Dual 4−Input NAND Gate

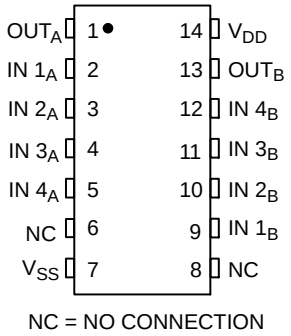

NC = NO CONNECTION

Figure 1. Pin Assignment

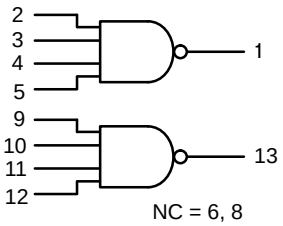

V_{DD} = PIN 14
V_{SS} = PIN 7

Figure 2. Logic Diagram

ORDERING INFORMATION

Device	Package	Shipping†
MC14012BDG	SOIC−14 (Pb−Free)	55 Units / Rail
NLV14012BDG*	SOIC−14 (Pb−Free)	55 Units / Rail
MC14012BDR2G	SOIC−14 (Pb−Free)	2500 Units / Tape & Reel
NLV14012BDR2G*	SOIC−14 (Pb−Free)	2500 Units / Tape & Reel

†For information on tape and reel specifications, including part orientation and tape sizes, please refer to our Tape and Reel Packaging Specifications Brochure, BRD8011/D.
*NLV Prefix for Automotive and Other Applications Requiring Unique Site and Control Change Requirements; AEC−Q100 Qualified and PPAP Capable.

ELECTRICAL CHARACTERISTICS (Voltages Referenced to V_{SS})

Characteristic	Symbol	V_{DD} Vdc	−55°C Min	−55°C Max	25°C Min	25°C Typ (Note 2)	25°C Max	125°C Min	125°C Max	Unit
Output Voltage “0” Level	V_{OL}	5.0	−	0.05	−	0	0.05	−	0.05	Vdc
V_{in} = V_{DD} or 0		10	−	0.05	−	0	0.05	−	0.05	
		15	−	0.05	−	0	0.05	−	0.05	
“1” Level	V_{OH}	5.0	4.95	−	4.95	5.0	−	4.95	−	Vdc
V_{in} = 0 or V_{DD}		10	9.95	−	9.95	10	−	9.95	−	
		15	14.95	−	14.95	15	−	14.95	−	
Input Voltage “0” Level	V_{IL}									Vdc
(V_O = 4.5 or 0.5 Vdc)		5.0	−	1.5	−	2.25	1.5	−	1.5	
(V_O = 9.0 or 1.0 Vdc)		10	−	3.0	−	4.50	3.0	−	3.0	
(V_O = 13.5 or 1.5 Vdc)		15	−	4.0	−	6.75	4.0	−	4.0	
“1” Level	V_{IH}									Vdc
(V_O = 0.5 or 4.5 Vdc)		5.0	3.5	−	3.5	2.75	−	3.5	−	
(V_O = 1.0 or 9.0 Vdc)		10	7.0	−	7.0	5.50	−	7.0	−	
(V_O = 1.5 or 13.5 Vdc)		15	11	−	11	8.25	−	11	−	
Output Drive Current	I_{OH}									mAdc
(V_{OH} = 2.5 Vdc) Source		5.0	–3.0	−	–2.4	–4.2	−	–1.7	−	
(V_{OH} = 4.6 Vdc)		5.0	–0.64	−	–0.51	–0.88	−	–0.36	−	
(V_{OH} = 9.5 Vdc)		10	–1.6	−	–1.3	–2.25	−	–0.9	−	
(V_{OH} = 13.5 Vdc)		15	–4.2	−	–3.4	–8.8	−	–2.4	−	
(V_{OL} = 0.4 Vdc) Sink	I_{OL}	5.0	0.64	−	0.51	0.88	−	0.36	−	mAdc
(V_{OL} = 0.5 Vdc)		10	1.6	−	1.3	2.25	−	0.9	−	
(V_{OL} = 1.5 Vdc)		15	4.2	−	3.4	8.8	−	2.4	−	
Input Current	I_{in}	15	−	±0.1	−	±0.00001	±0.1	−	±1.0	μAdc
Input Capacitance (V_{in} = 0)	C_{in}	−	−	−	−	5.0	7.5	−	−	pF
Quiescent Current (Per Package)	I_{DD}	5.0	−	0.25	−	0.0005	0.25	−	7.5	μAdc
		10	−	0.5	−	0.0010	0.5	−	15	
		15	−	1.0	−	0.0015	1.0	−	30	
Total Supply Current (Notes 3, 4) (Dynamic plus Quiescent, Per Gate, C_L = 50 pF)	I_T	5.0	I_T = (0.3 μA/kHz) f + I_{DD}/N							μAdc
		10	I_T = (0.6 μA/kHz) f + I_{DD}/N							
		15	I_T = (0.9 μA/kHz) f + I_{DD}/N							

Product parametric performance is indicated in the Electrical Characteristics for the listed test conditions, unless otherwise noted. Product performance may not be indicated by the Electrical Characteristics if operated under different conditions.

2. Data labelled “Typ” is not to be used for design purposes but is intended as an indication of the IC’s potential performance.
3. The formulas given are for the typical characteristics only at 25°C.
4. To calculate total supply current at loads other than 50 pF:

$$I_T(C_L) = I_T(50\ pF) + (C_L - 50)\ Vfk$$

where: I_T is in μA (per package), C_L in pF, V = (V_{DD} − V_{SS}) in volts, f in kHz is input frequency, and k = 0.001 x the number of exercised gates per package.

SWITCHING CHARACTERISTICS (Note 5) (C_L = 50 pF, T_A = 25°C)

Characteristic	Symbol	V_{DD} Vdc	Min	Typ (Note 6)	Max	Unit
Output Rise Time	t_{TLH}					ns
t_{TLH} = (1.35 ns/pF) C_L + 33 ns		5.0	–	100	200	
t_{TLH} = (0.60 ns/pF) C_L + 20 ns		10	–	50	100	
t_{TLH} = (0.40 ns/PF) C_L + 20 ns		15	–	40	80	
Output Fall Time	t_{THL}					ns
t_{THL} = (1.35 ns/pF) C_L + 33 ns		5.0	–	100	200	
t_{THL} = (0.60 ns/pF) C_L + 20 ns		10	–	50	100	
t_{THL} = (0.40 ns/pF) C_L + 20 ns		15	–	40	80	
Propagation Delay Time	t_{PLH}, t_{PHL}					ns
t_{PLH}, t_{PHL} = (0.90 ns/pF) C_L + 115 ns		5.0	–	160	300	
t_{PLH}, t_{PHL} = (0.36 ns/pF) C_L + 47 ns		10	–	65	130	
t_{PLH}, t_{PHL} = (0.26 ns/pF) C_L + 37 ns		15	–	50	100	

5. The formulas given are for the typical characteristics only at 25°C.
6. Data labelled “Typ” is not to be used for design purposes but is intended as an indication of the IC’s potential performance.

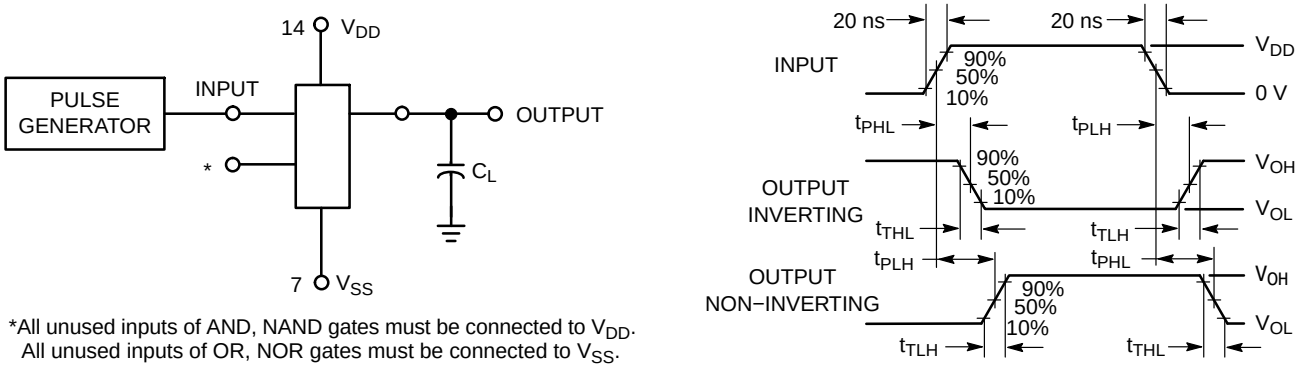

*All unused inputs of AND, NAND gates must be connected to V_{DD}.
All unused inputs of OR, NOR gates must be connected to V_{SS}.

Figure 3. Switching Time Test Circuit and Waveforms

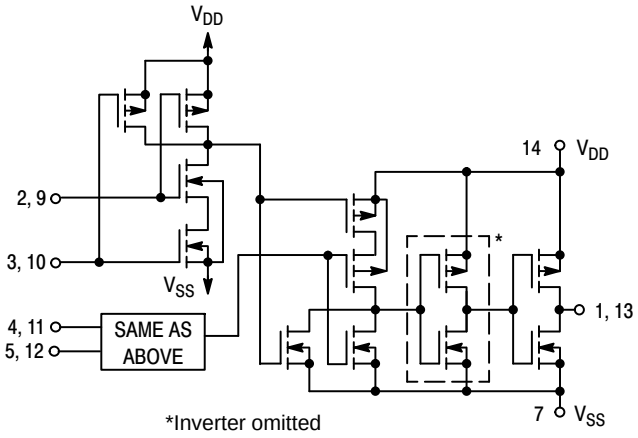

Figure 4. Circuit Schematic − One of Two Gates Shown

TYPICAL B−SERIES GATE CHARACTERISTICS

N−CHANNEL DRAIN CURRENT (SINK)

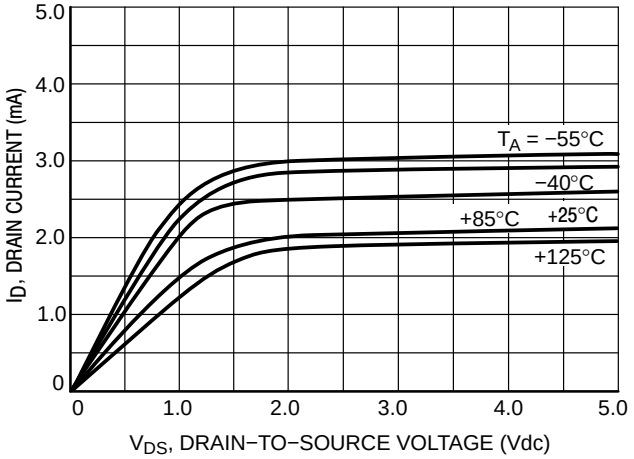

Figure 5. V_{GS} = 5.0 Vdc

P−CHANNEL DRAIN CURRENT (SOURCE)

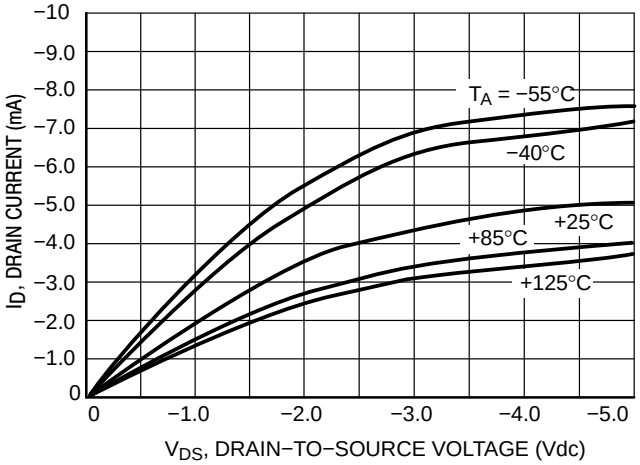

Figure 6. V_{GS} = − 5.0 Vdc

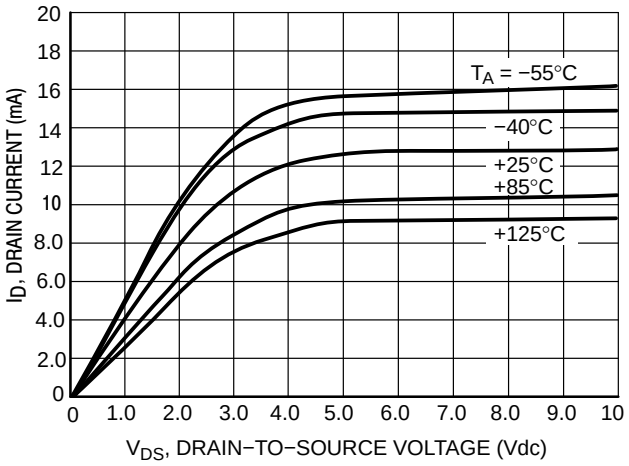

Figure 7. V_{GS} = 10 Vdc

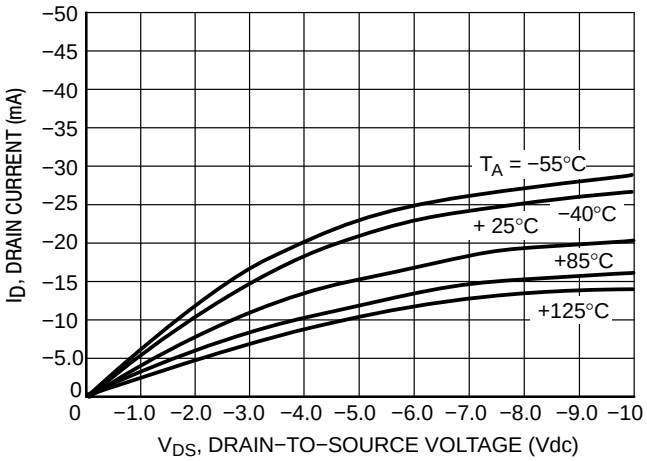

Figure 8. V_{GS} = − 10 Vdc

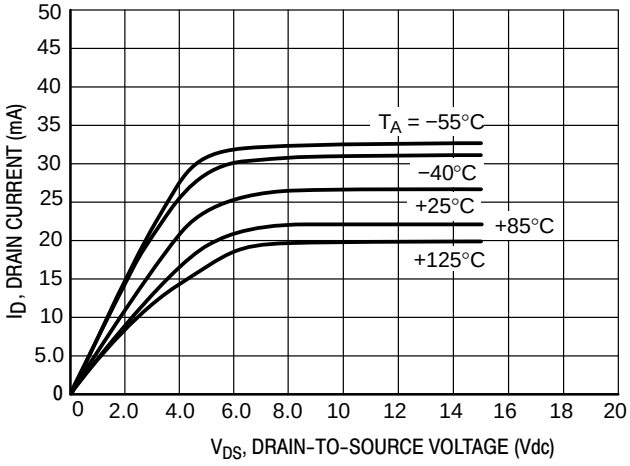

Figure 9. V_{GS} = 15 Vdc

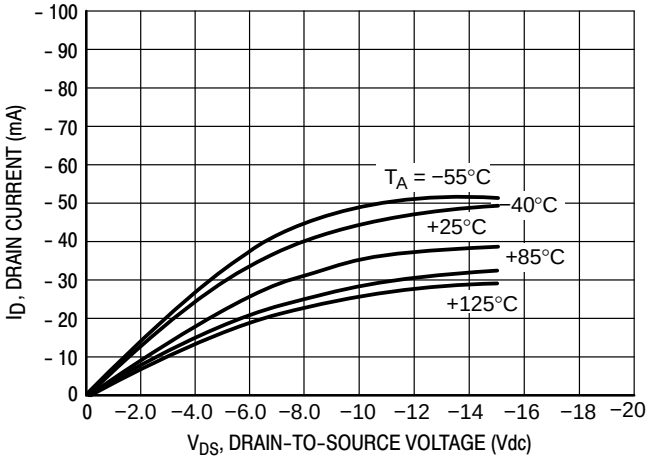

Figure 10. V_{GS} = − 15 Vdc

These typical curves are not guarantees, but are design aids.
Caution: The maximum rating for output current is 10 mA per pin.

VOLTAGE TRANSFER CHARACTERISTICS

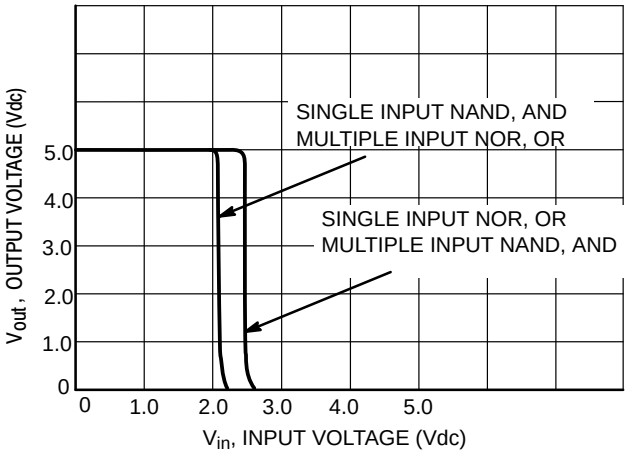

Figure 11. V_{DD} = 5.0 Vdc

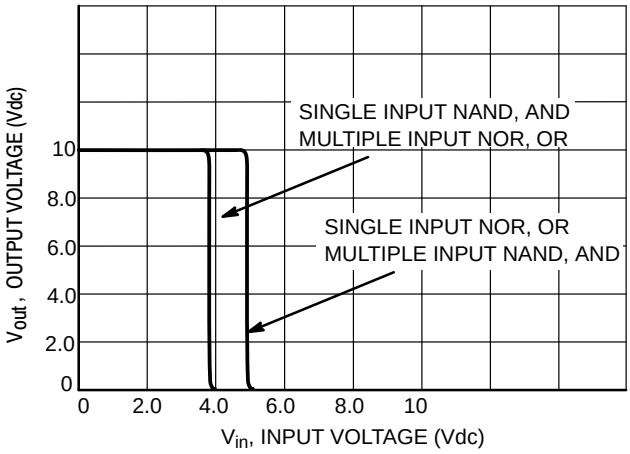

Figure 12. V_{DD} = 10 Vdc

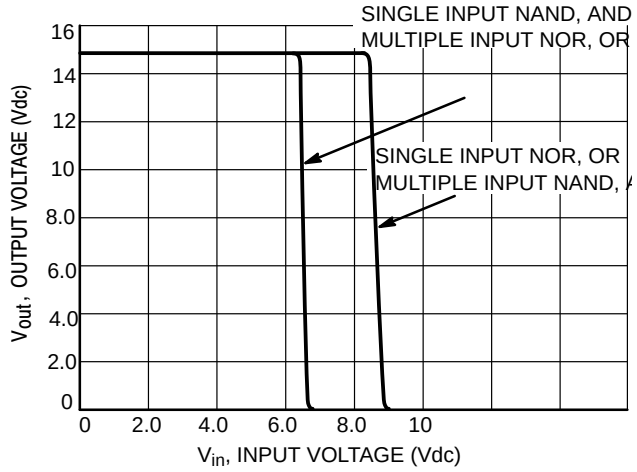

Figure 13. V_{DD} = 15 Vdc

DC NOISE MARGIN

The DC noise margin is defined as the input voltage range from an ideal “1” or “0” input level which does not produce output state change(s). The typical and guaranteed limit values of the input values V_{IL} and V_{IH} for the output(s) to be at a fixed voltage V_O are given in the Electrical Characteristics table. V_{IL} and V_{IH} are presented graphically in Figure 11.

Guaranteed minimum noise margins for both the “1” and “0” levels =

1.0 V with a 5.0 V supply
2.0 V with a 10.0 V supply
2.5 V with a 15.0 V supply

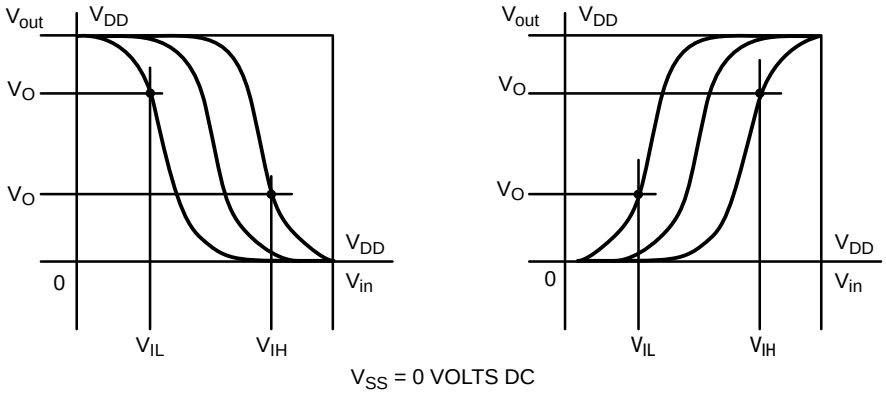

(a) Inverting Function **(b) Non−Inverting Function**

Figure 14. DC Noise Immunity

MECHANICAL CASE OUTLINE
PACKAGE DIMENSIONS

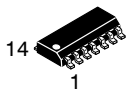

SCALE 1:1

SOIC−14 NB
CASE 751A−03
ISSUE L

DATE 03 FEB 2016

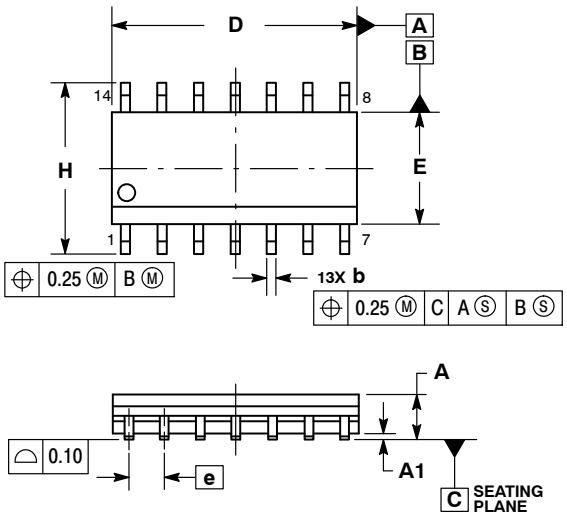

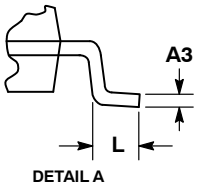

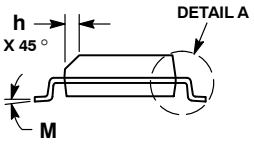

NOTES:
1. DIMENSIONING AND TOLERANCING PER ASME Y14.5M, 1994.
2. CONTROLLING DIMENSION: MILLIMETERS.
3. DIMENSION b DOES NOT INCLUDE DAMBAR PROTRUSION. ALLOWABLE PROTRUSION SHALL BE 0.13 TOTAL IN EXCESS OF AT MAXIMUM MATERIAL CONDITION.
4. DIMENSIONS D AND E DO NOT INCLUDE MOLD PROTRUSIONS.
5. MAXIMUM MOLD PROTRUSION 0.15 PER SIDE.

	MILLIMETERS		INCHES	
DIM	MIN	MAX	MIN	MAX
A	1.35	1.75	0.054	0.068
A1	0.10	0.25	0.004	0.010
A3	0.19	0.25	0.008	0.010
b	0.35	0.49	0.014	0.019
D	8.55	8.75	0.337	0.344
E	3.80	4.00	0.150	0.157
e	1.27 BSC		0.050 BSC	
H	5.80	6.20	0.228	0.244
h	0.25	0.50	0.010	0.019
L	0.40	1.25	0.016	0.049
M	0 °	7 °	0 °	7 °

SOLDERING FOOTPRINT*

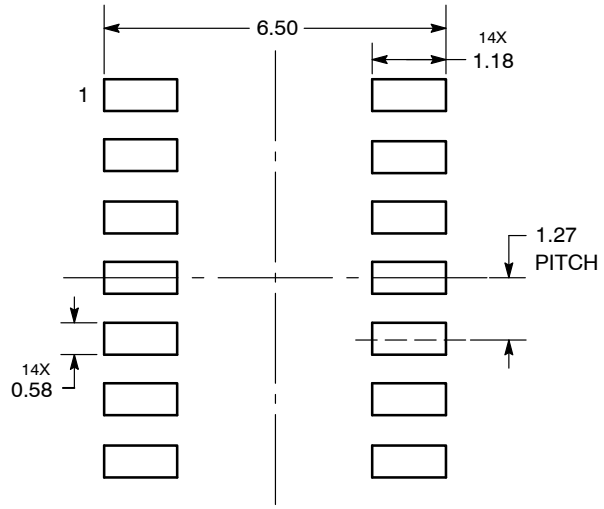

DIMENSIONS: MILLIMETERS

*For additional information on our Pb−Free strategy and soldering details, please download the ON Semiconductor Soldering and Mounting Techniques Reference Manual, SOLDERRM/D.

GENERIC MARKING DIAGRAM*

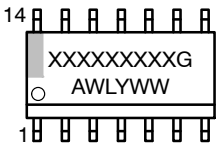

XXXXX = Specific Device Code
A = Assembly Location
WL = Wafer Lot
Y = Year
WW = Work Week
G = Pb−Free Package

*This information is generic. Please refer to device data sheet for actual part marking. Pb−Free indicator, “G” or microdot “▪”, may or may not be present. Some products may not follow the Generic Marking.

STYLES ON PAGE 2

DOCUMENT NUMBER:	**98ASB42565B**	Electronic versions are uncontrolled except when accessed directly from the Document Repository. Printed versions are uncontrolled except when stamped “CONTROLLED COPY” in red.	
DESCRIPTION:	**SOIC−14 NB**		**PAGE 1 OF 2**

onsemi and onsemi are trademarks of Semiconductor Components Industries, LLC dba **onsemi** or its subsidiaries in the United States and/or other countries. **onsemi** reserves the right to make changes without further notice to any products herein. **onsemi** makes no warranty, representation or guarantee regarding the suitability of its products for any particular purpose, nor does **onsemi** assume any liability arising out of the application or use of any product or circuit, and specifically disclaims any and all liability, including without limitation special, consequential or incidental damages. **onsemi** does not convey any license under its patent rights nor the rights of others.

© Semiconductor Components Industries, LLC, 2019

SOIC−14
CASE 751A−03
ISSUE L

DATE 03 FEB 2016

STYLE 1:
PIN 1. COMMON CATHODE
2. ANODE/CATHODE
3. ANODE/CATHODE
4. NO CONNECTION
5. ANODE/CATHODE
6. NO CONNECTION
7. ANODE/CATHODE
8. ANODE/CATHODE
9. ANODE/CATHODE
10. NO CONNECTION
11. ANODE/CATHODE
12. ANODE/CATHODE
13. NO CONNECTION
14. COMMON ANODE

STYLE 2:
CANCELLED

STYLE 3:
PIN 1. NO CONNECTION
2. ANODE
3. ANODE
4. NO CONNECTION
5. ANODE
6. NO CONNECTION
7. ANODE
8. ANODE
9. ANODE
10. NO CONNECTION
11. ANODE
12. ANODE
13. NO CONNECTION
14. COMMON CATHODE

STYLE 4:
PIN 1. NO CONNECTION
2. CATHODE
3. CATHODE
4. NO CONNECTION
5. CATHODE
6. NO CONNECTION
7. CATHODE
8. CATHODE
9. CATHODE
10. NO CONNECTION
11. CATHODE
12. CATHODE
13. NO CONNECTION
14. COMMON ANODE

STYLE 5:
PIN 1. COMMON CATHODE
2. ANODE/CATHODE
3. ANODE/CATHODE
4. ANODE/CATHODE
5. ANODE/CATHODE
6. NO CONNECTION
7. COMMON ANODE
8. COMMON CATHODE
9. ANODE/CATHODE
10. ANODE/CATHODE
11. ANODE/CATHODE
12. ANODE/CATHODE
13. NO CONNECTION
14. COMMON ANODE

STYLE 6:
PIN 1. CATHODE
2. CATHODE
3. CATHODE
4. CATHODE
5. CATHODE
6. CATHODE
7. CATHODE
8. ANODE
9. ANODE
10. ANODE
11. ANODE
12. ANODE
13. ANODE
14. ANODE

STYLE 7:
PIN 1. ANODE/CATHODE
2. COMMON ANODE
3. COMMON CATHODE
4. ANODE/CATHODE
5. ANODE/CATHODE
6. ANODE/CATHODE
7. ANODE/CATHODE
8. ANODE/CATHODE
9. ANODE/CATHODE
10. ANODE/CATHODE
11. COMMON CATHODE
12. COMMON ANODE
13. ANODE/CATHODE
14. ANODE/CATHODE

STYLE 8:
PIN 1. COMMON CATHODE
2. ANODE/CATHODE
3. ANODE/CATHODE
4. NO CONNECTION
5. ANODE/CATHODE
6. ANODE/CATHODE
7. COMMON ANODE
8. COMMON ANODE
9. ANODE/CATHODE
10. ANODE/CATHODE
11. NO CONNECTION
12. ANODE/CATHODE
13. ANODE/CATHODE
14. COMMON CATHODE

onsemi and ONSEMI. are trademarks of Semiconductor Components Industries, LLC dba **onsemi** or its subsidiaries in the United States and/or other countries. **onsemi** reserves the right to make changes without further notice to any products herein. **onsemi** makes no warranty, representation or guarantee regarding the suitability of its products for any particular purpose, nor does **onsemi** assume any liability arising out of the application or use of any product or circuit, and specifically disclaims any and all liability, including without limitation special, consequential or incidental damages. **onsemi** does not convey any license under its patent rights nor the rights of others.

© Semiconductor Components Industries, LLC, 2019

onsemi, , and other names, marks, and brands are registered and/or common law trademarks of Semiconductor Components Industries, LLC dba "**onsemi**" or its affiliates and/or subsidiaries in the United States and/or other countries. **onsemi** owns the rights to a number of patents, trademarks, copyrights, trade secrets, and other intellectual property. A listing of **onsemi**'s product/patent coverage may be accessed at www.onsemi.com/site/pdf/Patent−Marking.pdf. **onsemi** reserves the right to make changes at any time to any products or information herein, without notice. The information herein is provided "as−is" and **onsemi** makes no warranty, representation or guarantee regarding the accuracy of the information, product features, availability, functionality, or suitability of its products for any particular purpose, nor does **onsemi** assume any liability arising out of the application or use of any product or circuit, and specifically disclaims any and all liability, including without limitation special, consequential or incidental damages. Buyer is responsible for its products and applications using **onsemi** products, including compliance with all laws, regulations and safety requirements or standards, regardless of any support or applications information provided by **onsemi**. "Typical" parameters which may be provided in **onsemi** data sheets and/or specifications can and do vary in different applications and actual performance may vary over time. All operating parameters, including "Typicals" must be validated for each customer application by customer's technical experts. **onsemi** does not convey any license under any of its intellectual property rights nor the rights of others. **onsemi** products are not designed, intended, or authorized for use as a critical component in life support systems or any FDA Class 3 medical devices or medical devices with a same or similar classification in a foreign jurisdiction or any devices intended for implantation in the human body. Should Buyer purchase or use **onsemi** products for any such unintended or unauthorized application, Buyer shall indemnify and hold **onsemi** and its officers, employees, subsidiaries, affiliates, and distributors harmless against all claims, costs, damages, and expenses, and reasonable attorney fees arising out of, directly or indirectly, any claim of personal injury or death associated with such unintended or unauthorized use, even if such claim alleges that **onsemi** was negligent regarding the design or manufacture of the part. **onsemi** is an Equal Opportunity/Affirmative Action Employer. This literature is subject to all applicable copyright laws and is not for resale in any manner.

ADDITIONAL INFORMATION

TECHNICAL PUBLICATIONS:
Technical Library: www.onsemi.com/design/resources/technical−documentation
onsemi Website: www.onsemi.com

ONLINE SUPPORT: www.onsemi.com/support
For additional information, please contact your local Sales Representative at www.onsemi.com/support/sales