Hex Buffer

MC14049B, MC14050B

The MC14049B Hex Inverter/Buffer and MC14050B Noninverting Hex Buffer are constructed with MOS P−Channel and N−Channel enhancement mode devices in a single monolithic structure. These complementary MOS devices find primary use where low power dissipation and/or high noise immunity is desired. These devices provide logic level conversion using only one supply voltage, V_{DD}.

The input−signal high level (V_{IH}) can exceed the V_{DD} supply voltage for logic level conversions. Two TTL/DTL loads can be driven when the devices are used as a CMOS−to−TTL/DTL converter (V_{DD} = 5.0 V, $V_{OL} \le$ 0.4 V, $I_{OL} \ge$ 3.2 mA).

Note that pins 13 and 16 are not connected internally on these devices; consequently connections to these terminals will not affect circuit operation.

Features

- High Source and Sink Currents
- High−to−Low Level Converter
- Supply Voltage Range = 3.0 V to 18 V
- V_{IN} can exceed V_{DD}
- Meets JEDEC B Specifications
- Improved ESD Protection On All Inputs
- NLV Prefix for Automotive and Other Applications Requiring Unique Site and Control Change Requirements; AEC−Q100 Qualified and PPAP Capable
- These Devices are Pb−Free and are RoHS Compliant

MAXIMUM RATINGS (Voltages Referenced to V_{SS})

Symbol	Parameter	Value	Unit
V_{DD}	DC Supply Voltage Range	−0.5 to +18.0	V
V_{in}	Input Voltage Range (DC or Transient)	−0.5 to +18.0	V
V_{out}	Output Voltage Range (DC or Transient)	−0.5 to V_{DD} + 0.5	V
I_{in}	Input Current (DC or Transient) per Pin	±10	mA
I_{out}	Output Current (DC or Transient) per Pin	±45	mA
P_D	Power Dissipation, per Package (Note 1) (Plastic) (SOIC)	 825 740	mW
T_A	Ambient Temperature Range	−55 to +125	°C
T_{stg}	Storage Temperature Range	−65 to +150	°C
T_L	Lead Temperature (8−Second Soldering)	260	°C

Stresses exceeding those listed in the Maximum Ratings table may damage the device. If any of these limits are exceeded, device functionality should not be assumed, damage may occur and reliability may be affected.

1. Temperature Derating: See Figure 3.

This device contains protection circuitry to protect the inputs against damage due to high static voltages or electric fields referenced to the V_{SS} pin only. Extra precautions must be taken to avoid applications of any voltage higher than the maximum rated voltages to this high−impedance circuit. For proper operation, the ranges $V_{SS} \le V_{in} \le$ 18 V and $V_{SS} \le V_{out} \le V_{DD}$ are recommended.

Unused inputs must always be tied to an appropriate logic voltage level (e.g., either V_{SS} or V_{DD}). Unused outputs must be left open.

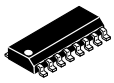

SOIC−16
D SUFFIX
CASE 751B



TSSOP−16
DT SUFFIX
CASE 948F

PIN ASSIGNMENT

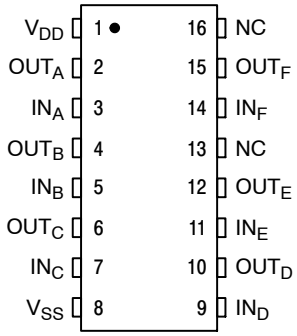

MARKING DIAGRAMS

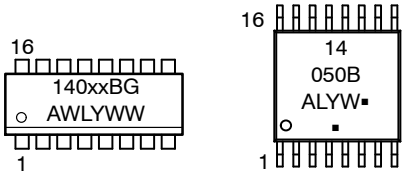

SOIC−16 TSSOP−16

xx	= Specific Device Code
A	= Assembly Location
WL, L	= Wafer Lot
YY, Y	= Year
WW, W	= Work Week
G or ▪	= Pb−Free Indicator

(Note: Microdot may be in either location)

ORDERING INFORMATION

See detailed ordering and shipping information in the package dimensions section on page 2 of this data sheet.

© Semiconductor Components Industries, LLC, 2014

LOGIC DIAGRAM

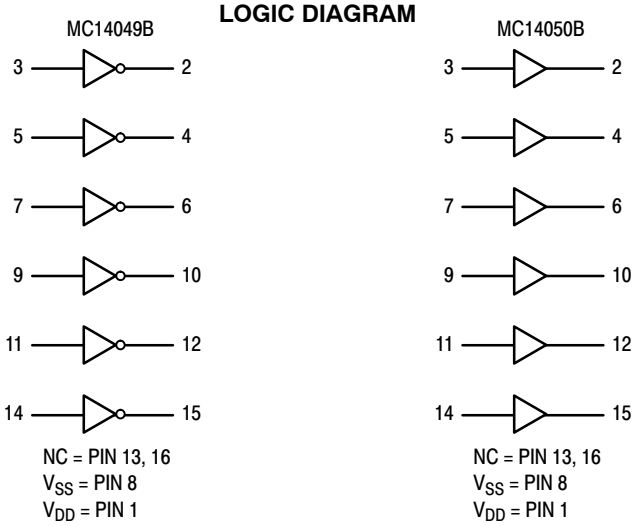

ORDERING INFORMATION

Device	Package	Shipping†
MC14049BDG	SOIC−16 (Pb−Free)	48 Units / Rail
MC14049BDR2G	SOIC−16 (Pb−Free)	2500 Units / Tape & Reel
NLV14049BDR2G*	SOIC−16 (Pb−Free)	2500 Units / Tape & Reel
MC14050BDG	SOIC−16 (Pb−Free)	48 Units / Rail
MC14050BDR2G	SOIC−16 (Pb−Free)	2500 Units / Tape & Reel
NLV14050BDR2G*	SOIC−16 (Pb−Free)	2500 Units / Tape & Reel
MC14050BDTR2G	TSSOP−16 (Pb−Free)	2500 Units / Tape & Reel

†For information on tape and reel specifications, including part orientation and tape sizes, please refer to our Tape and Reel Packaging Specifications Brochure, BRD8011/D.

*NLV Prefix for Automotive and Other Applications Requiring Unique Site and Control Change Requirements; AEC−Q100 Qualified and PPAP Capable.

ELECTRICAL CHARACTERISTICS (Voltages Referenced to V_{SS})

Characteristic	Symbol	V_{DD} Vdc	–55°C Min	–55°C Max	+25°C Min	+25°C Typ (Note 2)	+25°C Max	+125°C Min	+125°C Max	Unit
Output Voltage “0” Level	V_{OL}	5.0	–	0.05	–	0	0.05	–	0.05	Vdc
$V_{in} = V_{DD}$		10	–	0.05	–	0	0.05	–	0.05	
		15	–	0.05	–	0	0.05	–	0.05	
“1” Level	V_{OH}	5.0	4.95	–	4.95	5.0	–	4.95	–	Vdc
$V_{in} = 0$		10	9.95	–	9.95	10	–	9.95	–	
		15	14.95	–	14.95	15	–	14.95	–	
Input Voltage “0” Level	V_{IL}									Vdc
(V_O = 4.5 Vdc)		5.0	–	1.5	–	2.25	1.5	–	1.5	
(V_O = 9.0 Vdc)		10	–	3.0	–	4.50	3.0	–	3.0	
(V_O = 13.5 Vdc)		15	–	4.0	–	6.75	4.0	–	4.0	
“1” Level	V_{IH}									Vdc
(V_O = 0.5 Vdc)		5.0	3.5	–	3.5	2.75	–	3.5	–	
(V_O = 1.0 Vdc)		10	7.0	–	7.0	5.50	–	7.0	–	
(V_O = 1.5 Vdc)		15	11	–	11	8.25	–	11	–	
Output Drive Current	I_{OH}									mAdc
(V_{OH} = 2.5 Vdc) Source		5.0	–1.6	–	–1.25	–2.5	–	–1.0	–	
(V_{OH} = 9.5 Vdc)		10	–1.6	–	–1.30	–2.6	–	–1.0	–	
(V_{OH} = 13.5 Vdc)		15	–4.7	–	–3.75	–10	–	–3.0	–	
(V_{OL} = 0.4 Vdc) Sink	I_{OL}	5.0	3.75	–	3.2	6.0	–	2.6	–	mAdc
(V_{OL} = 0.5 Vdc)		10	10	–	8.0	16	–	6.6	–	
(V_{OL} = 1.5 Vdc)		15	30	–	24	40	–	19	–	
Input Current	I_{in}	15	–	±0.1	–	±0.00001	±0.1	–	±1.0	μAdc
Input Capacitance (V_{in} = 0)	C_{in}	–	–	–	–	10	20	–	–	pF
Quiescent Current (Per Package)	I_{DD}	5.0	–	1.0	–	0.002	1.0	–	30	μAdc
		10	–	2.0	–	0.004	2.0	–	60	
		15	–	4.0	–	0.006	4.0	–	120	
Total Supply Current (Notes 3 & 4) (Dynamic plus Quiescent, per package) (C_L = 50 pF on all outputs, all buffers switching	I_T	5.0	$I_T = (1.8\ \mu A/kHz)\ f + I_{DD}$							μAdc
		10	$I_T = (3.5\ \mu A/kHz)\ f + I_{DD}$							
		15	$I_T = (5.3\ \mu A/kHz)\ f + I_{DD}$							

Product parametric performance is indicated in the Electrical Characteristics for the listed test conditions, unless otherwise noted. Product performance may not be indicated by the Electrical Characteristics if operated under different conditions.

2. Data labelled “Typ” is not to be used for design purposes but is intended as an indication of the IC’s potential performance.
3. The formulas given are for the typical characteristics only at +25°C
4. To calculate total supply current at loads other than 50 pF:

$$I_T(C_L) = I_T(50\ pF) + (C_L - 50)\ Vfk$$

Where: I_T is in μA (per Package), C_L in pF, V = (V_{DD} – V_{SS}) in volts, f in kHz is input frequency and k = 0.002.

AC SWITCHING CHARACTERISTICS (Note 5) (C_L = 50 pF, T_A = + 25°C)

Characteristic	Symbol	V_{DD} Vdc	Min	Typ (Note 6)	Max	Unit
Output Rise Time	t_{TLH}					ns
t_{TLH} = (0.7 ns/pF) C_L + 65 ns		5.0	–	100	160	
t_{TLH} = (0.25 ns/pF) C_L + 37.5 ns		10	–	50	80	
t_{TLH} = (0.2 ns/pF) C_L + 30 ns		15	–	40	60	
Output Fall Time	t_{THL}					ns
t_{THL} = (0.2 ns/pF) C_L + 30 ns		5.0	–	40	60	
t_{THL} = (0.06 ns/pF) C_L + 17 ns		10	–	20	40	
t_{THL} = (0.04 ns/pF) C_L + 13 ns		15	–	15	30	
Propagation Delay Time	t_{PLH}					ns
t_{PLH} = (0.33 ns/pF) C_L + 63.5 ns		5.0	–	80	140	
t_{PLH} = (0.19 ns/pF) C_L + 30.5 ns		10	–	40	80	
t_{PLH} = (0.06 ns/pF) C_L + 27 ns		15	–	30	60	
Propagation Delay Time	t_{PHL}					ns
t_{PHL} = (0.2 ns/pF) C_L + 30 ns		5.0	–	40	80	
t_{PHL} = (0.1 ns/pF) C_L + 15 ns		10	–	20	40	
t_{PHL} = (0.05 ns/pF) C_L + 12.5 ns		15	–	15	30	

5. The formulas given are for the typical characteristics only at 25°C.
6. Data labeled “Typ” is not to be used for design purposes but is intended as an indication of the IC’s potential performance.

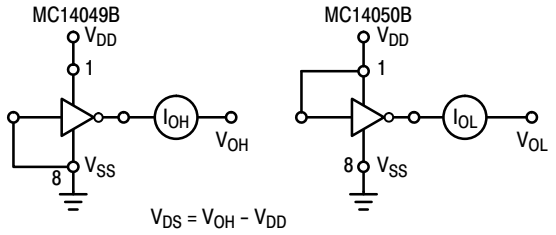

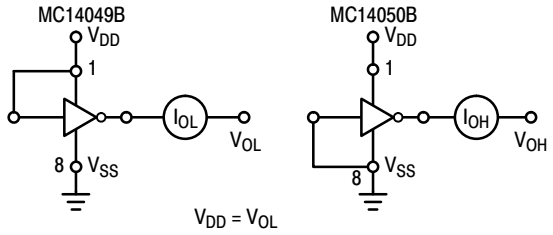

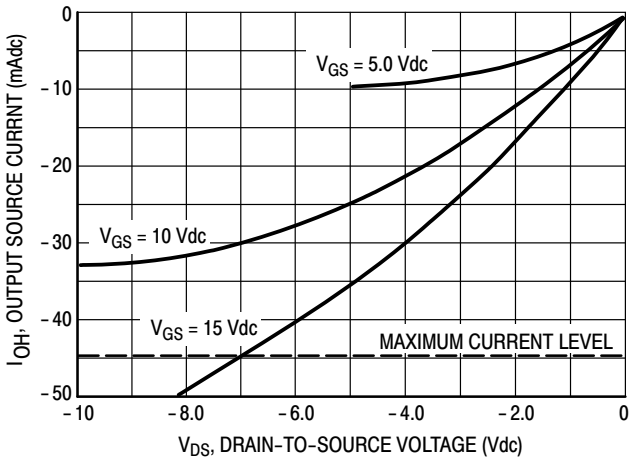

Figure 1. Typical Output Source Characteristics

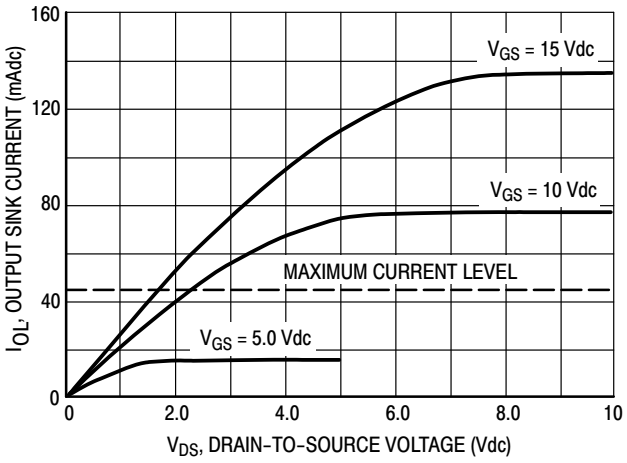

Figure 2. Typical Output Sink Characteristics

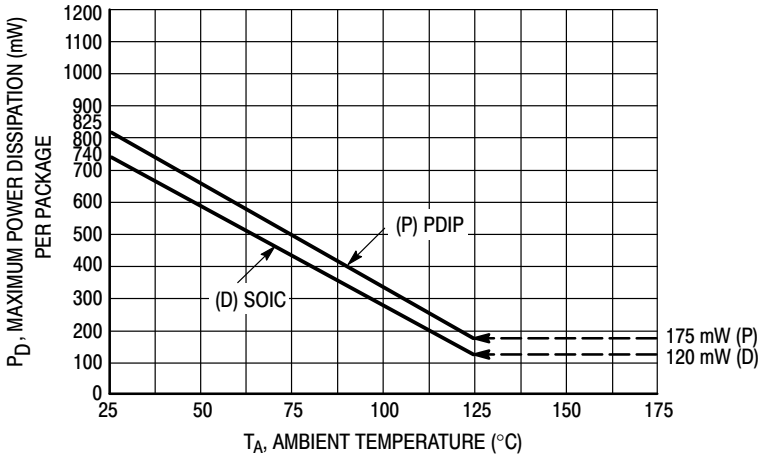

Figure 3. Ambient Temperature Power Derating

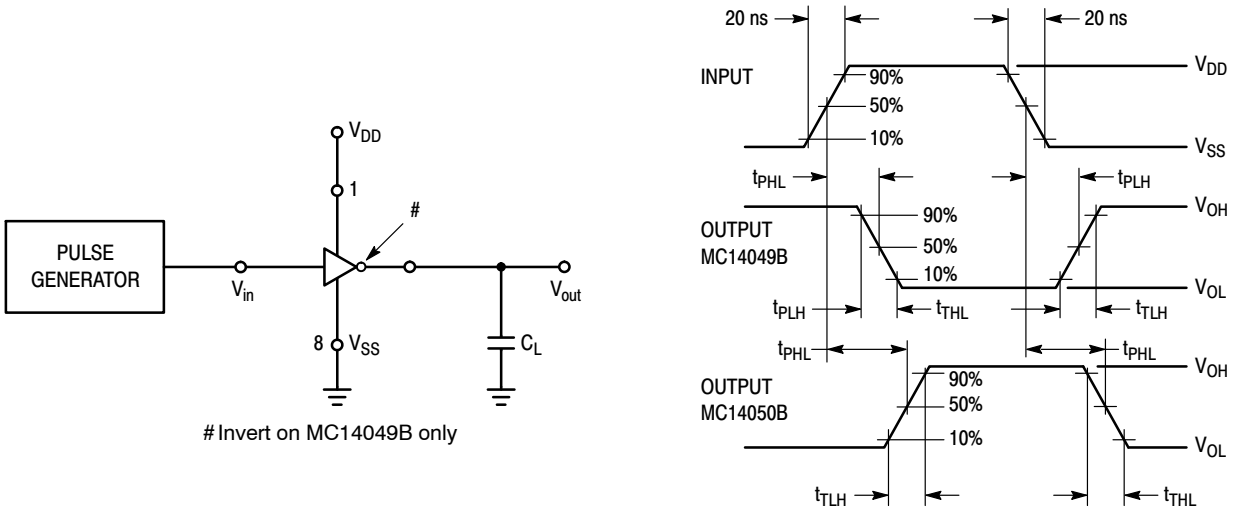

Figure 4. Switching Time Test Circuit and Waveforms

MECHANICAL CASE OUTLINE
PACKAGE DIMENSIONS

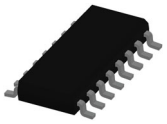

SOIC−16 9.90x3.90x1.50 1.27P
CASE 751B
ISSUE L

DATE 29 MAY 2024

NOTES:
1. DIMENSIONING AND TOLERANCING PER ASME Y14.5M, 2018.
2. DIMENSION IN MILLIMETERS. ANGLE IN DEGREES.
3. DIMENSIONS D AND E1 DO NOT INCLUDE MOLD PROTRUSION.
4. MAXIMUM MOLD PROTRUSION 0.15mm PER SIDE.
5. DIMENSION b DOES NOT INCLUDE DAMBAR PROTRUSION. ALLOWABLE DAMBAR PROTRUSION SHALL BE 0.127mm TOTAL IN EXCESS OF THE b DIMENSION AT MAXIMUM MATERIAL CONDITION.

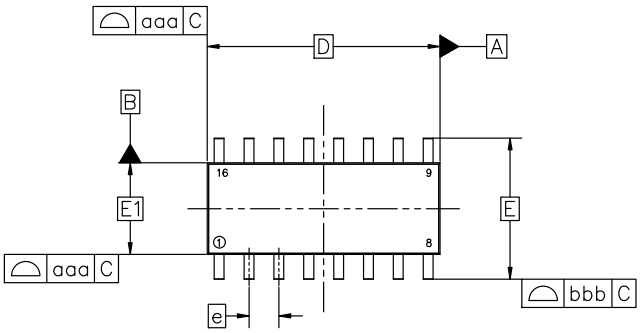

TOP VIEW

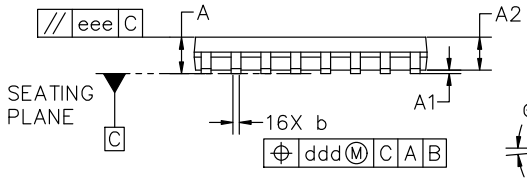

SIDE VIEW

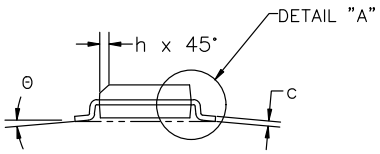

END VIEW

MILLIMETERS			
DIM	MIN	NOM	MAX
A	1.35	1.55	1.75
A1	0.00	0.05	0.10
A2	1.35	1.50	1.65
b	0.35	0.42	0.49
c	0.19	0.22	0.25
D	9.90 BSC		
E	6.00 BSC		
E1	3.90 BSC		
e	1.27 BSC		
h	0.25	−−−	0.50
L	0.40	0.83	1.25
L1	1.05 REF		
θ	0°	−−−	7°
TOLERANCE OF FORM AND POSITION			
aaa	0.10		
bbb	0.20		
ccc	0.10		
ddd	0.25		
eee	0.10		

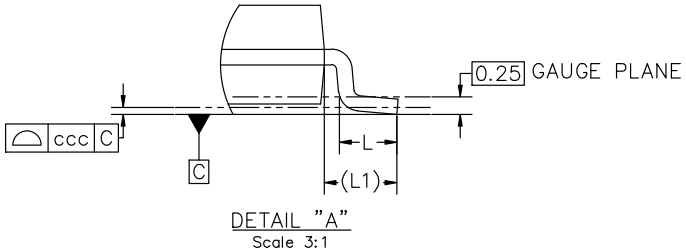

DETAIL "A"
Scale 3:1

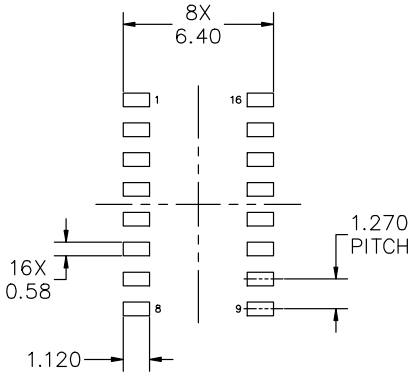

RECOMMENDED MOUNTING FOOTPRINT

*FOR ADDITIONAL INFORMATION ON OUR PB−FREE STRATEGY AND SOLDERING DETAILS, PLEASE DOWNLOAD THE onsemi SOLDERING AND MOUNTING TECHNIQUES REFERENCE MANUAL, SOLDERRM/D

DOCUMENT NUMBER:	98ASB42566B	Electronic versions are uncontrolled except when accessed directly from the Document Repository. Printed versions are uncontrolled except when stamped "CONTROLLED COPY" in red.
DESCRIPTION:	SOIC−16 9.90X3.90X1.50 1.27P	PAGE 1 OF 2

onsemi and onsemi are trademarks of Semiconductor Components Industries, LLC dba **onsemi** or its subsidiaries in the United States and/or other countries. **onsemi** reserves the right to make changes without further notice to any products herein. **onsemi** makes no warranty, representation or guarantee regarding the suitability of its products for any particular purpose, nor does **onsemi** assume any liability arising out of the application or use of any product or circuit, and specifically disclaims any and all liability, including without limitation special, consequential or incidental damages. **onsemi** does not convey any license under its patent rights nor the rights of others.

© Semiconductor Components Industries, LLC, 2019

SOIC−16 9.90x3.90x1.50 1.27P
CASE 751B
ISSUE L

DATE 29 MAY 2024

GENERIC
MARKING DIAGRAM*

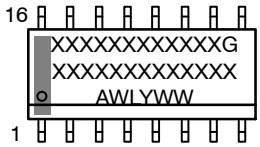

XXXXX = Specific Device Code
A = Assembly Location
WL = Wafer Lot
Y = Year
WW = Work Week
G = Pb−Free Package

*This information is generic. Please refer to device data sheet for actual part marking. Pb−Free indicator, "G" or microdot "▪", may or may not be present. Some products may not follow the Generic Marking.

STYLE 1:		STYLE 2:		STYLE 3:		STYLE 4:	
PIN 1.	COLLECTOR	PIN 1.	CATHODE	PIN 1.	COLLECTOR, DYE #1	PIN 1.	COLLECTOR, DYE #1
2.	BASE	2.	ANODE	2.	BASE, #1	2.	COLLECTOR, #1
3.	EMITTER	3.	NO CONNECTION	3.	EMITTER, #1	3.	COLLECTOR, #2
4.	NO CONNECTION	4.	CATHODE	4.	COLLECTOR, #1	4.	COLLECTOR, #2
5.	EMITTER	5.	CATHODE	5.	COLLECTOR, #2	5.	COLLECTOR, #3
6.	BASE	6.	NO CONNECTION	6.	BASE, #2	6.	COLLECTOR, #3
7.	COLLECTOR	7.	ANODE	7.	EMITTER, #2	7.	COLLECTOR, #4
8.	COLLECTOR	8.	CATHODE	8.	COLLECTOR, #2	8.	COLLECTOR, #4
9.	BASE	9.	CATHODE	9.	COLLECTOR, #3	9.	BASE, #4
10.	EMITTER	10.	ANODE	10.	BASE, #3	10.	EMITTER, #4
11.	NO CONNECTION	11.	NO CONNECTION	11.	EMITTER, #3	11.	BASE, #3
12.	EMITTER	12.	CATHODE	12.	COLLECTOR, #3	12.	EMITTER, #3
13.	BASE	13.	CATHODE	13.	COLLECTOR, #4	13.	BASE, #2
14.	COLLECTOR	14.	NO CONNECTION	14.	BASE, #4	14.	EMITTER, #2
15.	EMITTER	15.	ANODE	15.	EMITTER, #4	15.	BASE, #1
16.	COLLECTOR	16.	CATHODE	16.	COLLECTOR, #4	16.	EMITTER, #1

STYLE 5:		STYLE 6:		STYLE 7:	
PIN 1.	DRAIN, DYE #1	PIN 1.	CATHODE	PIN 1.	SOURCE N-CH
2.	DRAIN, #1	2.	CATHODE	2.	COMMON DRAIN (OUTPUT)
3.	DRAIN, #2	3.	CATHODE	3.	COMMON DRAIN (OUTPUT)
4.	DRAIN, #2	4.	CATHODE	4.	GATE P-CH
5.	DRAIN, #3	5.	CATHODE	5.	COMMON DRAIN (OUTPUT)
6.	DRAIN, #3	6.	CATHODE	6.	COMMON DRAIN (OUTPUT)
7.	DRAIN, #4	7.	CATHODE	7.	COMMON DRAIN (OUTPUT)
8.	DRAIN, #4	8.	CATHODE	8.	SOURCE P-CH
9.	GATE, #4	9.	ANODE	9.	SOURCE P-CH
10.	SOURCE, #4	10.	ANODE	10.	COMMON DRAIN (OUTPUT)
11.	GATE, #3	11.	ANODE	11.	COMMON DRAIN (OUTPUT)
12.	SOURCE, #3	12.	ANODE	12.	COMMON DRAIN (OUTPUT)
13.	GATE, #2	13.	ANODE	13.	GATE N-CH
14.	SOURCE, #2	14.	ANODE	14.	COMMON DRAIN (OUTPUT)
15.	GATE, #1	15.	ANODE	15.	COMMON DRAIN (OUTPUT)
16.	SOURCE, #1	16.	ANODE	16.	SOURCE N-CH

onsemi and onsemi are trademarks of Semiconductor Components Industries, LLC dba **onsemi** or its subsidiaries in the United States and/or other countries. **onsemi** reserves the right to make changes without further notice to any products herein. **onsemi** makes no warranty, representation or guarantee regarding the suitability of its products for any particular purpose, nor does **onsemi** assume any liability arising out of the application or use of any product or circuit, and specifically disclaims any and all liability, including without limitation special, consequential or incidental damages. **onsemi** does not convey any license under its patent rights nor the rights of others.

© Semiconductor Components Industries, LLC, 2019

MECHANICAL CASE OUTLINE
PACKAGE DIMENSIONS

TSSOP−16 WB
CASE 948F
ISSUE B

DATE 19 OCT 2006

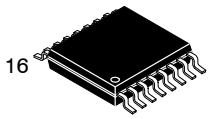

SCALE 2:1

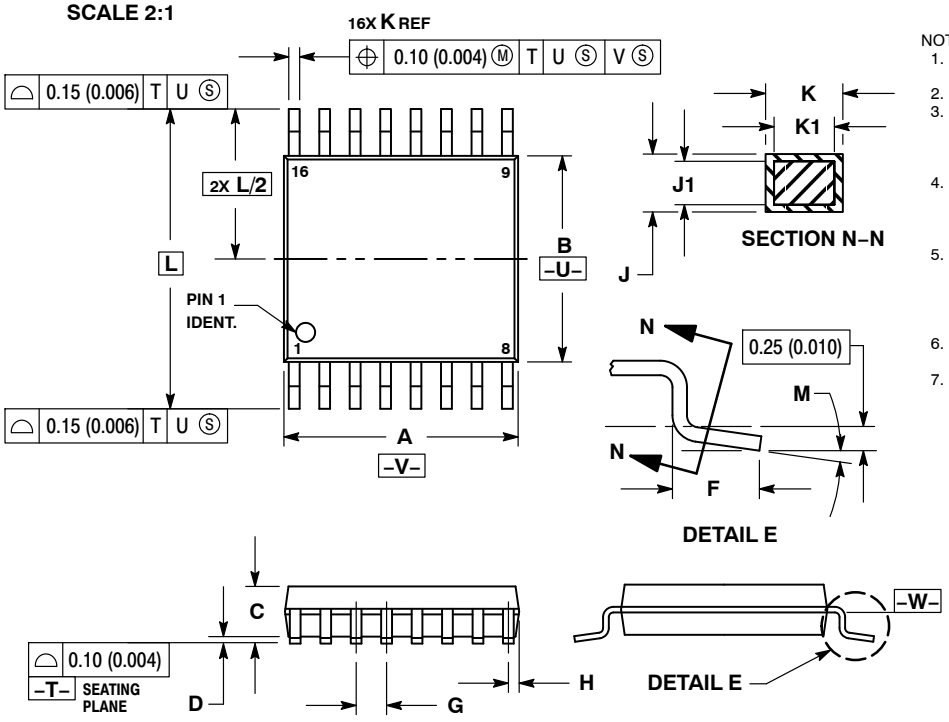

NOTES:
1. DIMENSIONING AND TOLERANCING PER ANSI Y14.5M, 1982.
2. CONTROLLING DIMENSION: MILLIMETER.
3. DIMENSION A DOES NOT INCLUDE MOLD FLASH. PROTRUSIONS OR GATE BURRS. MOLD FLASH OR GATE BURRS SHALL NOT EXCEED 0.15 (0.006) PER SIDE.
4. DIMENSION B DOES NOT INCLUDE INTERLEAD FLASH OR PROTRUSION. INTERLEAD FLASH OR PROTRUSION SHALL NOT EXCEED 0.25 (0.010) PER SIDE.
5. DIMENSION K DOES NOT INCLUDE DAMBAR PROTRUSION. ALLOWABLE DAMBAR PROTRUSION SHALL BE 0.08 (0.003) TOTAL IN EXCESS OF THE K DIMENSION AT MAXIMUM MATERIAL CONDITION.
6. TERMINAL NUMBERS ARE SHOWN FOR REFERENCE ONLY.
7. DIMENSION A AND B ARE TO BE DETERMINED AT DATUM PLANE −W−.

	MILLIMETERS		INCHES	
DIM	MIN	MAX	MIN	MAX
A	4.90	5.10	0.193	0.200
B	4.30	4.50	0.169	0.177
C	−−−	1.20	−−−	0.047
D	0.05	0.15	0.002	0.006
F	0.50	0.75	0.020	0.030
G	0.65 BSC		0.026 BSC	
H	0.18	0.28	0.007	0.011
J	0.09	0.20	0.004	0.008
J1	0.09	0.16	0.004	0.006
K	0.19	0.30	0.007	0.012
K1	0.19	0.25	0.007	0.010
L	6.40 BSC		0.252 BSC	
M	0 °	8 °	0 °	8 °

RECOMMENDED SOLDERING FOOTPRINT*

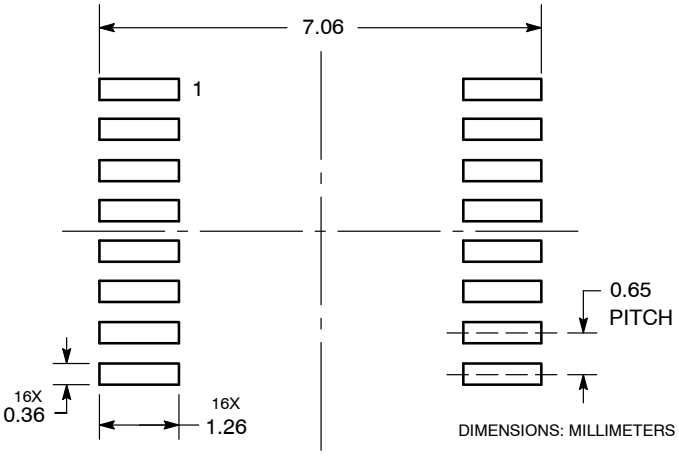

*For additional information on our Pb−Free strategy and soldering details, please download the **onsemi** Soldering and Mounting Techniques Reference Manual, SOLDERRM/D.

GENERIC MARKING DIAGRAM*

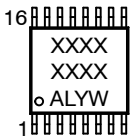

XXXX	= Specific Device Code
A	= Assembly Location
L	= Wafer Lot
Y	= Year
W	= Work Week
G or ▪	= Pb−Free Package

*This information is generic. Please refer to device data sheet for actual part marking. Pb−Free indicator, “G” or microdot “ ▪”, may or may not be present. Some products may not follow the Generic Marking.

DOCUMENT NUMBER:	**98ASH70247A**	Electronic versions are uncontrolled except when accessed directly from the Document Repository. Printed versions are uncontrolled except when stamped “CONTROLLED COPY” in red.	
DESCRIPTION:	**TSSOP−16**		**PAGE 1 OF 1**

onsemi and onsemi are trademarks of Semiconductor Components Industries, LLC dba **onsemi** or its subsidiaries in the United States and/or other countries. **onsemi** reserves the right to make changes without further notice to any products herein. **onsemi** makes no warranty, representation or guarantee regarding the suitability of its products for any particular purpose, nor does **onsemi** assume any liability arising out of the application or use of any product or circuit, and specifically disclaims any and all liability, including without limitation special, consequential or incidental damages. **onsemi** does not convey any license under its patent rights nor the rights of others.

© Semiconductor Components Industries, LLC, 2019

onsemi, , and other names, marks, and brands are registered and/or common law trademarks of Semiconductor Components Industries, LLC dba "**onsemi**" or its affiliates and/or subsidiaries in the United States and/or other countries. **onsemi** owns the rights to a number of patents, trademarks, copyrights, trade secrets, and other intellectual property. A listing of **onsemi**'s product/patent coverage may be accessed at www.onsemi.com/site/pdf/Patent−Marking.pdf. **onsemi** reserves the right to make changes at any time to any products or information herein, without notice. The information herein is provided "as−is" and **onsemi** makes no warranty, representation or guarantee regarding the accuracy of the information, product features, availability, functionality, or suitability of its products for any particular purpose, nor does **onsemi** assume any liability arising out of the application or use of any product or circuit, and specifically disclaims any and all liability, including without limitation special, consequential or incidental damages. Buyer is responsible for its products and applications using **onsemi** products, including compliance with all laws, regulations and safety requirements or standards, regardless of any support or applications information provided by **onsemi**. "Typical" parameters which may be provided in **onsemi** data sheets and/or specifications can and do vary in different applications and actual performance may vary over time. All operating parameters, including "Typicals" must be validated for each customer application by customer's technical experts. **onsemi** does not convey any license under any of its intellectual property rights nor the rights of others. **onsemi** products are not designed, intended, or authorized for use as a critical component in life support systems or any FDA Class 3 medical devices or medical devices with a same or similar classification in a foreign jurisdiction or any devices intended for implantation in the human body. Should Buyer purchase or use **onsemi** products for any such unintended or unauthorized application, Buyer shall indemnify and hold **onsemi** and its officers, employees, subsidiaries, affiliates, and distributors harmless against all claims, costs, damages, and expenses, and reasonable attorney fees arising out of, directly or indirectly, any claim of personal injury or death associated with such unintended or unauthorized use, even if such claim alleges that **onsemi** was negligent regarding the design or manufacture of the part. **onsemi** is an Equal Opportunity/Affirmative Action Employer. This literature is subject to all applicable copyright laws and is not for resale in any manner.

ADDITIONAL INFORMATION

TECHNICAL PUBLICATIONS:
Technical Library: www.onsemi.com/design/resources/technical−documentation
onsemi Website: www.onsemi.com

ONLINE SUPPORT: www.onsemi.com/support
For additional information, please contact your local Sales Representative at www.onsemi.com/support/sales