MC14175B

Quad Type D Flip−Flop

The MC14175B quad type D flip−flop is constructed with MOS P−channel and N−channel enhancement mode devices in a single monolithic structure. Each of the four flip−flops is positive−edge triggered by a common clock input (C). An active−low reset input (R) asynchronously resets all flip−flops. Each flip−flop has independent Data (D) inputs and complementary outputs (Q and Q). These devices may be used as shift register elements or as type T flip−flops for counter and toggle applications.

Features

- Complementary Outputs
- Static Operation
- All Inputs and Outputs Buffered
- Diode Protection on All Inputs
- Supply Voltage Range = 3.0 Vdc to 18 Vdc
- Output Compatible with Two Low−Power TTL Loads or One Low−Power Schottky TTL Load
- Functional Equivalent to TTL 74175
- These Devices are Pb−Free and are RoHS Compliant
- NLV Prefix for Automotive and Other Applications Requiring Unique Site and Control Change Requirements; AEC−Q100 Qualified and PPAP Capable*

MAXIMUM RATINGS (Voltages Referenced to V_{SS})

Parameter	Symbol	Value	Unit
DC Supply Voltage Range	V_{DD}	−0.5 to +18.0	V
Input or Output Voltage Range (DC or Transient)	V_{in}, V_{out}	−0.5 to V_{DD} + 0.5	V
Input or Output Current (DC or Transient) per Pin	I_{in}, I_{out}	±10	mA
Power Dissipation per Package (Note 1)	P_D	500	mW
Ambient Temperature Range	T_A	−55 to +125	°C
Storage Temperature Range		−65 to +150	°C
Lead Temperature (8−Second Soldering)		260	°C

Stresses exceeding those listed in the Maximum Ratings table may damage the device. If any of these limits are exceeded, device functionality should not be assumed, damage may occur and reliability may be affected.

1. Temperature Derating: “D/DW” Packages: –7.0 mW/°C From 65°C To 125°C

This device contains protection circuitry to guard against damage due to high static voltages or electric fields. However, precautions must be taken to avoid applications of any voltage higher than maximum rated voltages to this high−impedance circuit. For proper operation, V_{in} and V_{out} should be constrained to the range $V_{SS} \le (V_{in}$ or $V_{out}) \le V_{DD}$.

Unused inputs must always be tied to an appropriate logic voltage level (e.g., either V_{SS} or V_{DD}). Unused outputs must be left open.

ON Semiconductor®

http://onsemi.com



SOIC−16
D SUFFIX
CASE 751B

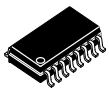

SOEIAJ−16
F SUFFIX
CASE 966

PIN ASSIGNMENT

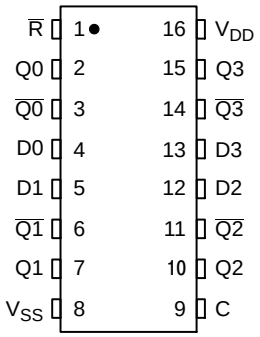

MARKING DIAGRAMS

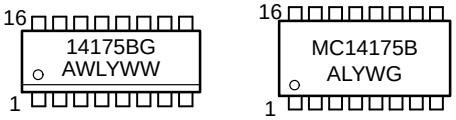

SOIC−16 **SOEIAJ−16**

A = Assembly Location
WL, L = Wafer Lot
YY, Y = Year
WW, W = Work Week
G = Pb−Free Package

ORDERING INFORMATION

Device	Package	Shipping†
MC14175BDG	SOIC−16 (Pb−Free)	48 Units/Rail
MC14175BDR2G	SOIC−16 (Pb−Free)	2500/Tape & Reel
NLV14175BDR2G*	SOIC−16 (Pb−Free)	2500/Tape & Reel
MC14175BFELG	SOEIAJ−16 (Pb−Free)	2000/Tape & Reel

†For information on tape and reel specifications, including part orientation and tape sizes, please refer to our Tape and Reel Packaging Specifications Brochure, BRD8011/D.

© Semiconductor Components Industries, LLC, 2014

TRUTH TABLE

Inputs			Outputs		
Clock	Data	$\overline{\text{Reset}}$	Q	$\overline{Q}$	
↑	0	1	0	1	
↑	1	1	1	0	
↓	X	1	Q	$\overline{Q}$	No Change
X	X	0	0	1	

X = Don't Care

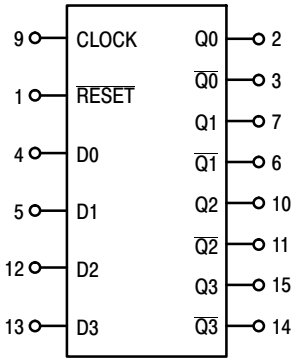

V_{DD} = PIN 16
V_{SS} = PIN 8

Figure 1. Block Diagram

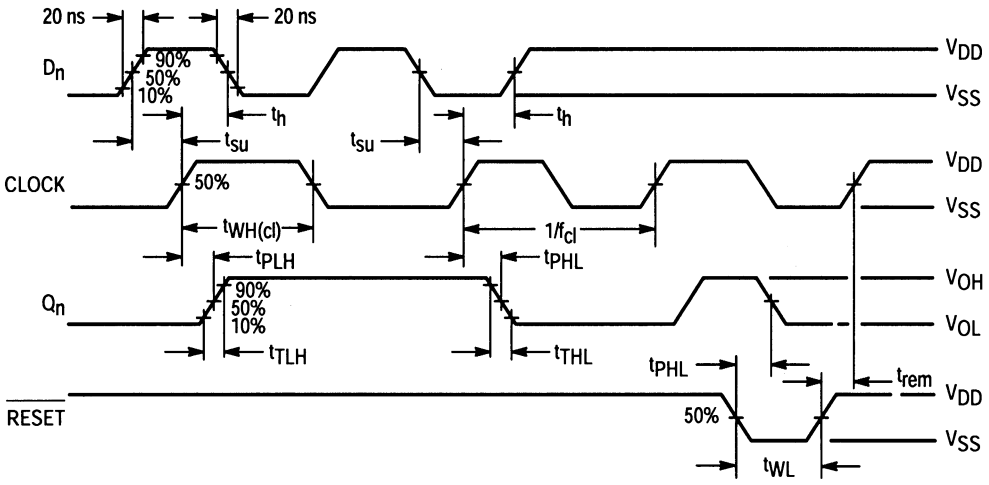

Figure 2. Timing Diagram

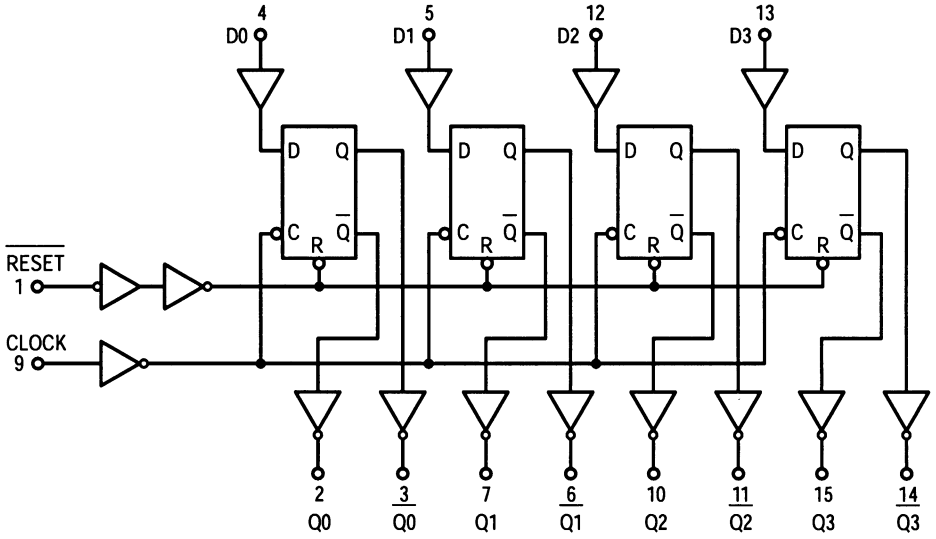

Figure 3. Functional Block Diagram

ELECTRICAL CHARACTERISTICS (Voltages Referenced to V_{SS})

Characteristic	Symbol	V_{DD} Vdc	−55°C Min	−55°C Max	25°C Min	25°C Typ (Note 2)	25°C Max	125°C Min	125°C Max	Unit
Output Voltage “0” Level V_{in} = V_{DD} or 0	V_{OL}	5.0 10 15	− − −	0.05 0.05 0.05	− − −	0 0 0	0.05 0.05 0.05	− − −	0.05 0.05 0.05	Vdc
“1” Level V_{in} = 0 or V_{DD}	V_{OH}	5.0 10 15	4.95 9.95 14.95	− − −	4.95 9.95 14.95	5.0 10 15	− − −	4.95 9.95 14.95	− − −	Vdc
Input Voltage “0” Level (V_O = 4.5 or 0.5 Vdc) (V_O = 9.0 or 1.0 Vdc) (V_O = 13.5 or 1.5 Vdc)	V_{IL}	5.0 10 15	− − −	1.5 3.0 4.0	− − −	2.25 4.50 6.75	1.5 3.0 4.0	− − −	1.5 3.0 4.0	Vdc
“1” Level (V_O = 0.5 or 4.5 Vdc) (V_O = 1.0 or 9.0 Vdc) (V_O = 1.5 or 13.5 Vdc)	V_{IH}	5.0 10 15	3.5 7.0 11	− − −	3.5 7.0 11	2.75 5.50 8.25	− − −	3.5 7.0 11	− − −	Vdc
Output Drive Current (V_{OH} = 2.5 Vdc) Source (V_{OH} = 4.6 Vdc) (V_{OH} = 9.5 Vdc) (V_{OH} = 13.5 Vdc)	I_{OH}	5.0 5.0 10 15	–3.0 –0.64 –1.6 –4.2	− − − −	–2.4 –0.51 –1.3 –3.4	–4.2 –0.88 –2.25 –8.8	− − − −	–1.7 –0.36 –0.9 –2.4	− − − −	mAdc
(V_{OL} = 0.4 Vdc) Sink (V_{OL} = 0.5 Vdc) (V_{OL} = 1.5 Vdc)	I_{OL}	5.0 10 15	0.64 1.6 4.2	− − −	0.51 1.3 3.4	0.88 2.25 8.8	− − −	0.36 0.9 2.4	− − −	mAdc
Input Current	I_{in}	15	−	±0.1	−	±0.00001	±0.1	−	±1.0	μAdc
Input Capacitance (V_{in} = 0)	C_{in}	−	−	−	−	5.0	7.5	−	−	pF
Quiescent Current (Per Package)	I_{DD}	5.0 10 15	− − −	5.0 10 20	− − −	0.005 0.010 0.015	5.0 10 20	− − −	150 300 600	μAdc
Total Supply Current (Notes 3 & 4) (Dynamic plus Quiescent, Per Package) (C_L = 50 pF on all outputs, all buffers switching)	I_T	5.0 10 15	I_T = (1.7 μA/kHz) f + I_{DD} I_T = (3.4 μA/kHz) f + I_{DD} I_T = (5.0 μA/kHz) f + I_{DD}							μAdc

Product parametric performance is indicated in the Electrical Characteristics for the listed test conditions, unless otherwise noted. Product performance may not be indicated by the Electrical Characteristics if operated under different conditions.

2. Data labelled “Typ” is not to be used for design purposes but is intended as an indication of the IC’s potential performance.
3. The formulas given are for the typical characteristics only at 25°C.
4. To calculate total supply current at loads other than 50 pF: $I_T(C_L) = I_T(50\ pF) + (C_L - 50)$ Vfk where: I_T is in μA (per package), C_L in pF, V = (V_{DD} – V_{SS}) in volts, f in kHz is input frequency, and k = 0.004.

SWITCHING CHARACTERISTICS (Note 5) (C_L = 50 pF, T_A = 25°C)

Characteristic	Symbol	V_{DD} Vdc	All Types			Unit
			Min	Typ (Note 6)	Max	
Output Rise and Fall Time	t_{TLH}, t_{THL}					ns
t_{TLH}, t_{THL} = (1.35 ns/pF) C_L + 32 ns		5.0	–	100	200	
t_{TLH}, t_{THL} = (0.6 ns/pF) C_L + 20 ns		10	–	50	100	
t_{TLH}, t_{THL} = (0.4 ns/pF) C_L + 20 ns		15	–	40	80	
Propagation Delay Time — Clock to Q, Q	t_{PLH}, t_{PHL}					ns
t_{PLH}, t_{PHL} = (0.9 ns/pF) C_L + 175 ns		5.0	–	220	400	
t_{PLH}, t_{PHL} = (0.36 ns/pF) C_L + 72 ns		10	–	90	160	
t_{PLH}, t_{PHL} = (0.26 ns/pF) C_L + 57 ns		15	–	70	120	
Propagation Delay Time — Reset to Q, Q	t_{PHL}, t_{PLH}					ns
t_{PHL} = (0.9 ns/pF) C_L + 280 ns		5.0	–	325	500	
t_{PHL} = (0.36 ns/pF) C_L + 112 ns		10	–	130	200	
t_{PHL} = (0.26 ns/pF) C_L + 87 ns		15	–	100	150	
Clock Pulse Width	t_{WH}	5.0	250	110	–	ns
		10	100	45	–	
		15	75	35	–	
$\overline{\text{Reset}}$ Pulse Width	t_{WL}	5.0	200	100	–	ns
		10	80	40	–	
		15	60	30	–	
Clock Pulse Frequency	f_{cl}	5.0	–	4.5	2.0	mHz
		10	–	11	5.0	
		15	–	14	6.5	
Clock Pulse Rise and Fall Time	t_{TLH}, t_{THL}	5.0	–	–	15	μs
		10	–	–	5.0	
		15	–	–	4.0	
Data Setup Time	t_{su}	5.0	120	60	–	ns
		10	50	25	–	
		15	40	20	–	
Data Hold Time	t_h	5.0	80	40	–	ns
		10	40	20	–	
		15	30	15	–	
$\overline{\text{Reset}}$ Removal Time	t_{rem}	5.0	250	125	–	ns
		10	100	50	–	
		15	80	40	–	

5. The formulas given are for the typical characteristics only at 25°C.
6. Data labelled “Typ” is not to be used for design purposes but is intended as an indication of the IC’s potential performance.

MECHANICAL CASE OUTLINE
PACKAGE DIMENSIONS

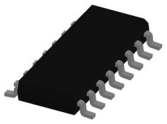

SOIC−16 9.90x3.90x1.50 1.27P
CASE 751B
ISSUE L

DATE 29 MAY 2024

NOTES:
1. DIMENSIONING AND TOLERANCING PER ASME Y14.5M, 2018.
2. DIMENSION IN MILLIMETERS. ANGLE IN DEGREES.
3. DIMENSIONS D AND E1 DO NOT INCLUDE MOLD PROTRUSION.
4. MAXIMUM MOLD PROTRUSION 0.15mm PER SIDE.
5. DIMENSION b DOES NOT INCLUDE DAMBAR PROTRUSION. ALLOWABLE DAMBAR PROTRUSION SHALL BE 0.127mm TOTAL IN EXCESS OF THE b DIMENSION AT MAXIMUM MATERIAL CONDITION.

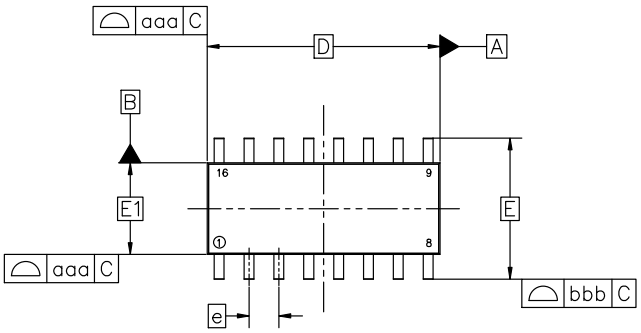

TOP VIEW

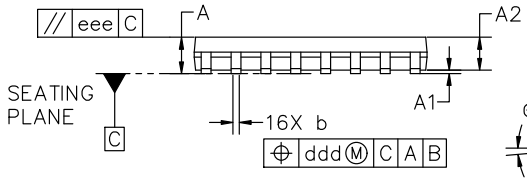

SIDE VIEW

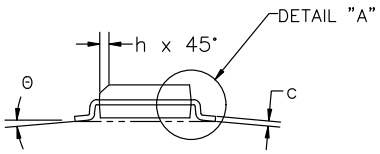

END VIEW

MILLIMETERS			
DIM	MIN	NOM	MAX
A	1.35	1.55	1.75
A1	0.00	0.05	0.10
A2	1.35	1.50	1.65
b	0.35	0.42	0.49
c	0.19	0.22	0.25
D	9.90 BSC		
E	6.00 BSC		
E1	3.90 BSC		
e	1.27 BSC		
h	0.25	−−−	0.50
L	0.40	0.83	1.25
L1	1.05 REF		
θ	0°	−−−	7°
TOLERANCE OF FORM AND POSITION			
aaa	0.10		
bbb	0.20		
ccc	0.10		
ddd	0.25		
eee	0.10		

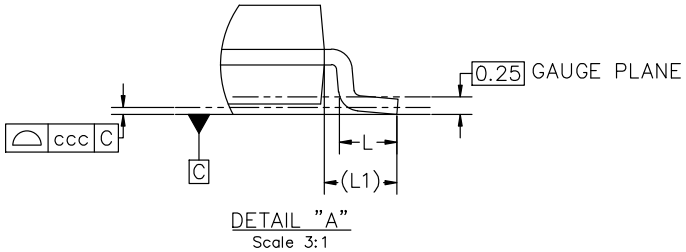

DETAIL "A"
Scale 3:1

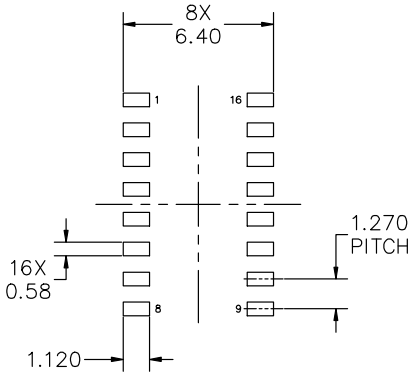

RECOMMENDED MOUNTING FOOTPRINT

*FOR ADDITIONAL INFORMATION ON OUR PB−FREE STRATEGY AND SOLDERING DETAILS, PLEASE DOWNLOAD THE onsemi SOLDERING AND MOUNTING TECHNIQUES REFERENCE MANUAL, SOLDERRM/D

DOCUMENT NUMBER:	98ASB42566B	Electronic versions are uncontrolled except when accessed directly from the Document Repository. Printed versions are uncontrolled except when stamped "CONTROLLED COPY" in red.
DESCRIPTION:	SOIC−16 9.90X3.90X1.50 1.27P	PAGE 1 OF 2

onsemi and onsemi are trademarks of Semiconductor Components Industries, LLC dba **onsemi** or its subsidiaries in the United States and/or other countries. **onsemi** reserves the right to make changes without further notice to any products herein. **onsemi** makes no warranty, representation or guarantee regarding the suitability of its products for any particular purpose, nor does **onsemi** assume any liability arising out of the application or use of any product or circuit, and specifically disclaims any and all liability, including without limitation special, consequential or incidental damages. **onsemi** does not convey any license under its patent rights nor the rights of others.

© Semiconductor Components Industries, LLC, 2019

SOIC−16 9.90x3.90x1.50 1.27P
CASE 751B
ISSUE L

DATE 29 MAY 2024

GENERIC
MARKING DIAGRAM*

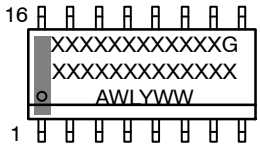

XXXXX = Specific Device Code
A = Assembly Location
WL = Wafer Lot
Y = Year
WW = Work Week
G = Pb−Free Package

*This information is generic. Please refer to device data sheet for actual part marking. Pb−Free indicator, "G" or microdot "▪", may or may not be present. Some products may not follow the Generic Marking.

STYLE 1:		STYLE 2:		STYLE 3:		STYLE 4:	
PIN 1.	COLLECTOR	PIN 1.	CATHODE	PIN 1.	COLLECTOR, DYE #1	PIN 1.	COLLECTOR, DYE #1
2.	BASE	2.	ANODE	2.	BASE, #1	2.	COLLECTOR, #1
3.	EMITTER	3.	NO CONNECTION	3.	EMITTER, #1	3.	COLLECTOR, #2
4.	NO CONNECTION	4.	CATHODE	4.	COLLECTOR, #1	4.	COLLECTOR, #2
5.	EMITTER	5.	CATHODE	5.	COLLECTOR, #2	5.	COLLECTOR, #3
6.	BASE	6.	NO CONNECTION	6.	BASE, #2	6.	COLLECTOR, #3
7.	COLLECTOR	7.	ANODE	7.	EMITTER, #2	7.	COLLECTOR, #4
8.	COLLECTOR	8.	CATHODE	8.	COLLECTOR, #2	8.	COLLECTOR, #4
9.	BASE	9.	CATHODE	9.	COLLECTOR, #3	9.	BASE, #4
10.	EMITTER	10.	ANODE	10.	BASE, #3	10.	EMITTER, #4
11.	NO CONNECTION	11.	NO CONNECTION	11.	EMITTER, #3	11.	BASE, #3
12.	EMITTER	12.	CATHODE	12.	COLLECTOR, #3	12.	EMITTER, #3
13.	BASE	13.	CATHODE	13.	COLLECTOR, #4	13.	BASE, #2
14.	COLLECTOR	14.	NO CONNECTION	14.	BASE, #4	14.	EMITTER, #2
15.	EMITTER	15.	ANODE	15.	EMITTER, #4	15.	BASE, #1
16.	COLLECTOR	16.	CATHODE	16.	COLLECTOR, #4	16.	EMITTER, #1

STYLE 5:		STYLE 6:		STYLE 7:	
PIN 1.	DRAIN, DYE #1	PIN 1.	CATHODE	PIN 1.	SOURCE N-CH
2.	DRAIN, #1	2.	CATHODE	2.	COMMON DRAIN (OUTPUT)
3.	DRAIN, #2	3.	CATHODE	3.	COMMON DRAIN (OUTPUT)
4.	DRAIN, #2	4.	CATHODE	4.	GATE P-CH
5.	DRAIN, #3	5.	CATHODE	5.	COMMON DRAIN (OUTPUT)
6.	DRAIN, #3	6.	CATHODE	6.	COMMON DRAIN (OUTPUT)
7.	DRAIN, #4	7.	CATHODE	7.	COMMON DRAIN (OUTPUT)
8.	DRAIN, #4	8.	CATHODE	8.	SOURCE P-CH
9.	GATE, #4	9.	ANODE	9.	SOURCE P-CH
10.	SOURCE, #4	10.	ANODE	10.	COMMON DRAIN (OUTPUT)
11.	GATE, #3	11.	ANODE	11.	COMMON DRAIN (OUTPUT)
12.	SOURCE, #3	12.	ANODE	12.	COMMON DRAIN (OUTPUT)
13.	GATE, #2	13.	ANODE	13.	GATE N-CH
14.	SOURCE, #2	14.	ANODE	14.	COMMON DRAIN (OUTPUT)
15.	GATE, #1	15.	ANODE	15.	COMMON DRAIN (OUTPUT)
16.	SOURCE, #1	16.	ANODE	16.	SOURCE N-CH

onsemi and onsemi are trademarks of Semiconductor Components Industries, LLC dba **onsemi** or its subsidiaries in the United States and/or other countries. **onsemi** reserves the right to make changes without further notice to any products herein. **onsemi** makes no warranty, representation or guarantee regarding the suitability of its products for any particular purpose, nor does **onsemi** assume any liability arising out of the application or use of any product or circuit, and specifically disclaims any and all liability, including without limitation special, consequential or incidental damages. **onsemi** does not convey any license under its patent rights nor the rights of others.

© Semiconductor Components Industries, LLC, 2019

onsemi, , and other names, marks, and brands are registered and/or common law trademarks of Semiconductor Components Industries, LLC dba "**onsemi**" or its affiliates and/or subsidiaries in the United States and/or other countries. **onsemi** owns the rights to a number of patents, trademarks, copyrights, trade secrets, and other intellectual property. A listing of **onsemi**'s product/patent coverage may be accessed at www.onsemi.com/site/pdf/Patent−Marking.pdf. **onsemi** reserves the right to make changes at any time to any products or information herein, without notice. The information herein is provided "as−is" and **onsemi** makes no warranty, representation or guarantee regarding the accuracy of the information, product features, availability, functionality, or suitability of its products for any particular purpose, nor does **onsemi** assume any liability arising out of the application or use of any product or circuit, and specifically disclaims any and all liability, including without limitation special, consequential or incidental damages. Buyer is responsible for its products and applications using **onsemi** products, including compliance with all laws, regulations and safety requirements or standards, regardless of any support or applications information provided by **onsemi**. "Typical" parameters which may be provided in **onsemi** data sheets and/or specifications can and do vary in different applications and actual performance may vary over time. All operating parameters, including "Typicals" must be validated for each customer application by customer's technical experts. **onsemi** does not convey any license under any of its intellectual property rights nor the rights of others. **onsemi** products are not designed, intended, or authorized for use as a critical component in life support systems or any FDA Class 3 medical devices or medical devices with a same or similar classification in a foreign jurisdiction or any devices intended for implantation in the human body. Should Buyer purchase or use **onsemi** products for any such unintended or unauthorized application, Buyer shall indemnify and hold **onsemi** and its officers, employees, subsidiaries, affiliates, and distributors harmless against all claims, costs, damages, and expenses, and reasonable attorney fees arising out of, directly or indirectly, any claim of personal injury or death associated with such unintended or unauthorized use, even if such claim alleges that **onsemi** was negligent regarding the design or manufacture of the part. **onsemi** is an Equal Opportunity/Affirmative Action Employer. This literature is subject to all applicable copyright laws and is not for resale in any manner.

ADDITIONAL INFORMATION

TECHNICAL PUBLICATIONS:
Technical Library: www.onsemi.com/design/resources/technical−documentation
onsemi Website: www.onsemi.com

ONLINE SUPPORT: www.onsemi.com/support
For additional information, please contact your local Sales Representative at www.onsemi.com/support/sales