Thank you for your interest in **onsemi** products.

Your technical document begins on the following pages.

Your Feedback is Important to Us!

Please take a moment to participate in our short survey.
At **onsemi**, we are dedicated to delivering technical content that best meets your needs.

Help Us Improve – Take the Survey

This survey is intended to collect your feedback, capture any issues you may encounter, and to provide improvements you would like to suggest.

We look forward to your feedback.

To learn more about **onsemi**, please visit our website at
www.onsemi.com

onsemi and onsemi and other names, marks, and brands are registered and/or common law trademarks of Semiconductor Components Industries, LLC dba "**onsemi**" or its affiliates and/or subsidiaries in the United States and/or other countries. **onsemi** owns the rights to a number of patents, trademarks, copyrights, trade secrets, and other intellectual property. A listing of **onsemi** product/patent coverage may be accessed at www.onsemi.com/site/pdf/Patent-Marking.pdf. **onsemi** reserves the right to make changes at any time to any products or information herein, without notice. The information herein is provided "as-is" and **onsemi** makes no warranty, representation or guarantee regarding the accuracy of the information, product features, availability, functionality, or suitability of its products for any particular purpose, nor does **onsemi** assume any liability arising out of the application or use of any product or circuit, and specifically disclaims any and all liability, including without limitation special, consequential or incidental damages. Buyer is responsible for its products and applications using **onsemi** products, including compliance with all laws, regulations and safety requirements or standards, regardless of any support or applications information provided by **onsemi**. "Typical" parameters which may be provided in **onsemi** data sheets and/or specifications can and do vary in different applications and actual performance may vary over time. All operating parameters, including "Typicals" must be validated for each customer application by customer's technical experts. **onsemi** does not convey any license under any of its intellectual property rights nor the rights of others. **onsemi** products are not designed, intended, or authorized for use as a critical component in life support systems or any FDA Class 3 medical devices or medical devices with a same or similar classification in a foreign jurisdiction or any devices intended for implantation in the human body. Should Buyer purchase or use **onsemi** products for any such unintended or unauthorized application, Buyer shall indemnify and hold **onsemi** and its officers, employees, subsidiaries, affiliates, and distributors harmless against all claims, costs, damages, and expenses, and reasonable attorney fees arising out of, directly or indirectly, any claim of personal injury or death associated with such unintended or unauthorized use, even if such claim alleges that **onsemi** was negligent regarding the design or manufacture of the part. **onsemi** is an Equal Opportunity/Affirmative Action Employer. This literature is subject to all applicable copyright laws and is not for resale in any manner. Other names and brands may be claimed as the property of others.

Brushless DC Motor Controller

MC33035, NCV33035

The MC33035 is a high performance second generation monolithic brushless DC motor controller containing all of the active functions required to implement a full featured open loop, three or four phase motor control system. This device consists of a rotor position decoder for proper commutation sequencing, temperature compensated reference capable of supplying sensor power, frequency programmable sawtooth oscillator, three open collector top drivers, and three high current totem pole bottom drivers ideally suited for driving power MOSFETs.

Also included are protective features consisting of undervoltage lockout, cycle−by−cycle current limiting with a selectable time delayed latched shutdown mode, internal thermal shutdown, and a unique fault output that can be interfaced into microprocessor controlled systems.

Typical motor control functions include open loop speed, forward or reverse direction, run enable, and dynamic braking. The MC33035 is designed to operate with electrical sensor phasings of 60°/300° or 120°/240°, and can also efficiently control brush DC motors.

Features

- 10 to 30 V Operation
- Undervoltage Lockout
- 6.25 V Reference Capable of Supplying Sensor Power
- Fully Accessible Error Amplifier for Closed Loop Servo Applications
- High Current Drivers Can Control External 3−Phase MOSFET Bridge
- Cycle−By−Cycle Current Limiting
- Pinned−Out Current Sense Reference
- Internal Thermal Shutdown
- Selectable 60°/300° or 120°/240° Sensor Phasings
- Can Efficiently Control Brush DC Motors with External MOSFET H−Bridge
- NCV Prefix for Automotive and Other Applications Requiring Unique Site and Control Change Requirements; AEC−Q100 Qualified and PPAP Capable
- Pb−Free Packages are Available

PDIP−24
P SUFFIX
CASE 724

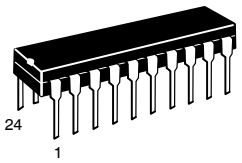

SOIC−24 WB
DW SUFFIX
CASE 751E

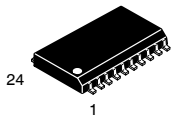

PIN CONNECTIONS

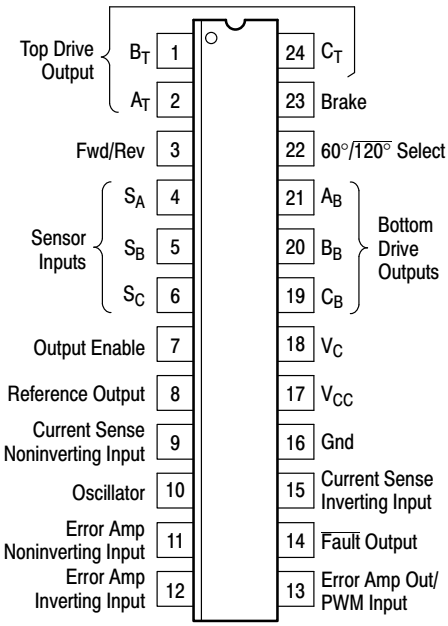

(Top View)

ORDERING INFORMATION

See detailed ordering and shipping information in the package dimensions section on page 28 of this data sheet.

DEVICE MARKING INFORMATION

See general marking information in the device marking section on page 28 of this data sheet.

© Semiconductor Components Industries, LLC, 2014

Representative Schematic Diagram

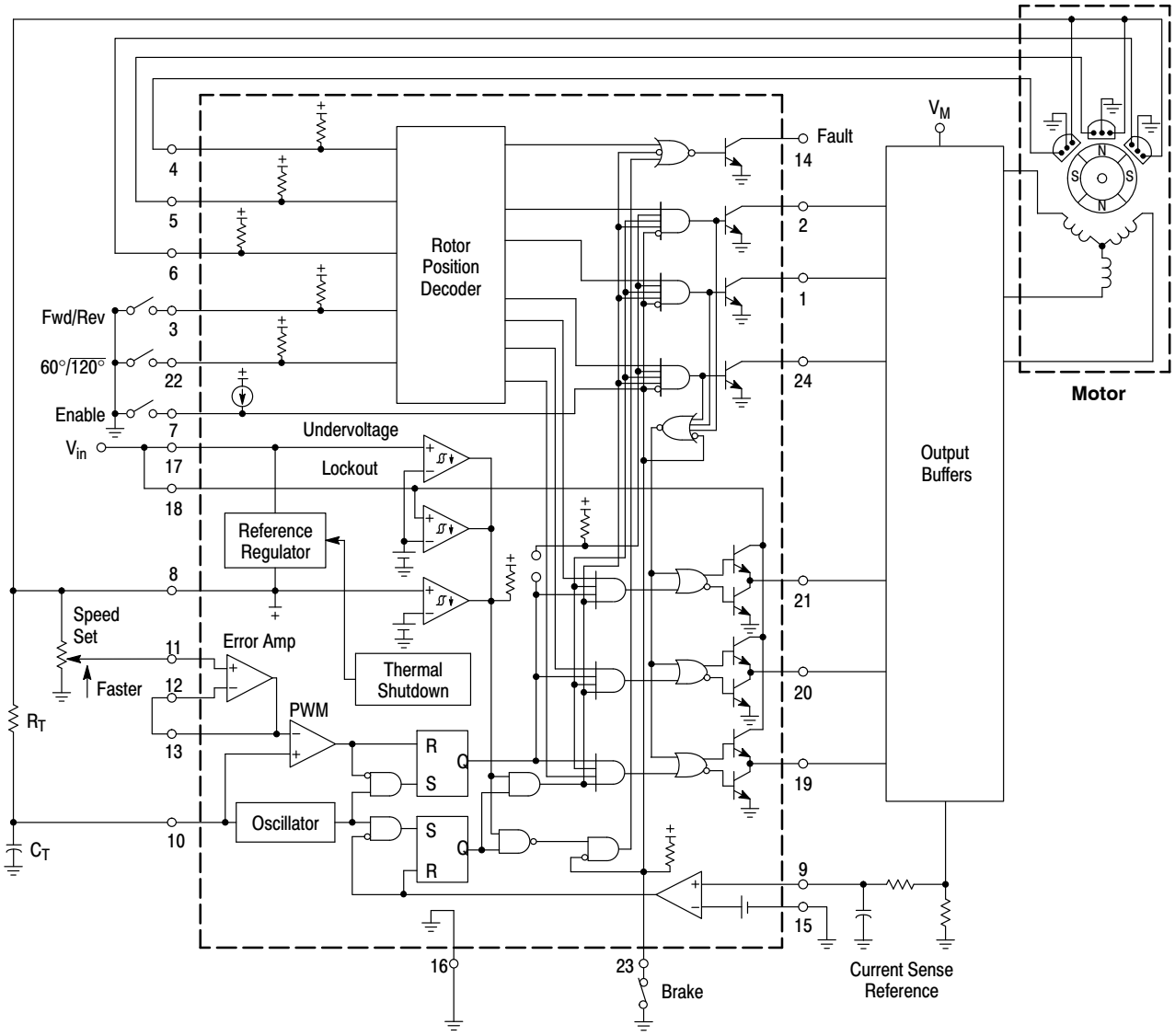

This device contains 285 active transistors.

MAXIMUM RATINGS

Rating		Symbol	Value	Unit
Power Supply Voltage		V_{CC}	40	V
Digital Inputs (Pins 3, 4, 5, 6, 22, 23)		–	V_{ref}	V
Oscillator Input Current (Source or Sink)		I_{OSC}	30	mA
Error Amp Input Voltage Range (Pins 11, 12, Note 1)		V_{IR}	−0.3 to V_{ref}	V
Error Amp Output Current (Source or Sink, Note 2)		I_{Out}	10	mA
Current Sense Input Voltage Range (Pins 9, 15)		V_{Sense}	−0.3 to 5.0	V
$\overline{\text{Fault}}$ Output Voltage		$V_{CE(\overline{Fault})}$	20	V
$\overline{\text{Fault}}$ Output Sink Current		$I_{Sink(\overline{Fault})}$	20	mA
Top Drive Voltage (Pins 1, 2, 24)		$V_{CE(top)}$	40	V
Top Drive Sink Current (Pins 1, 2, 24)		$I_{Sink(top)}$	50	mA
Bottom Drive Supply Voltage (Pin 18)		V_C	30	V
Bottom Drive Output Current (Source or Sink, Pins 19, 20, 21)		I_{DRV}	100	mA
Electrostatic Discharge Sensitivity (ESD) Human Body Model (HBM) Class 2, JESD22 A114−C Machine Model (MM) Class A, JESD22 A115−A Charged Device Model (CDM), JESD22 C101−C		 – – –	 2000 200 2000	 V V V
Power Dissipation and Thermal Characteristics P Suffix, Dual In Line, Case 724 Maximum Power Dissipation @ T_A = 85°C Thermal Resistance, Junction−to−Air DW Suffix, Surface Mount, Case 751E Maximum Power Dissipation @ T_A = 85°C Thermal Resistance, Junction−to−Air		 P_D $R_{\theta JA}$ P_D $R_{\theta JA}$	 867 75 650 100	 mW °C/W mW °C/W
Operating Junction Temperature		T_J	150	°C
Operating Ambient Temperature Range (Note 3)	MC33035 NCV33035	T_A	−40 to +85 −40 to +125	°C
Storage Temperature Range		T_{stg}	−65 to +150	°C

Stresses exceeding those listed in the Maximum Ratings table may damage the device. If any of these limits are exceeded, device functionality should not be assumed, damage may occur and reliability may be affected.

ELECTRICAL CHARACTERISTICS (V_{CC} = V_C = 20 V, R_T = 4.7 k, C_T = 10 nF, T_A = 25°C, unless otherwise noted.)

Characteristic	Symbol	Min	Typ	Max	Unit
REFERENCE SECTION					
Reference Output Voltage (I_{ref} = 1.0 mA) T_A = 25°C (Note 4)	V_{ref}	 5.9 5.82	 6.24 –	 6.5 6.57	V
Line Regulation (V_{CC} = 10 to 30 V, I_{ref} = 1.0 mA)	Reg_{line}	–	1.5	30	mV
Load Regulation (I_{ref} = 1.0 to 20 mA)	Reg_{load}	–	16	30	mV
Output Short Circuit Current (Note 5)	I_{SC}	40	75	–	mA
Reference Under Voltage Lockout Threshold	V_{th}	4.0	4.5	5.0	V
ERROR AMPLIFIER					
Input Offset Voltage (Note 4)	V_{IO}	–	0.4	10	mV
Input Offset Current (Note 4)	I_{IO}	–	8.0	500	nA
Input Bias Current (Note 4)	I_{IB}	–	–46	–1000	nA
Input Common Mode Voltage Range	V_{ICR}		(0 V to V_{ref})		V
Open Loop Voltage Gain (V_O = 3.0 V, R_L = 15 k)	A_{VOL}	70	80	–	dB
Input Common Mode Rejection Ratio	CMRR	55	86	–	dB
Power Supply Rejection Ratio (V_{CC} = V_C = 10 to 30 V)	PSRR	65	105	–	dB
Output Voltage Swing High State (R_L = 15 k to Gnd) Low State (R_L = 15 k to V_{ref})	 V_{OH} V_{OL}	 4.6 –	 5.3 0.5	 – 1.0	V
OSCILLATOR SECTION					
Oscillator Frequency	f_{OSC}	22	25	28	kHz
Frequency Change with Voltage (V_{CC} = 10 to 30 V)	$\Delta f_{OSC}/\Delta V$	–	0.01	5.0	%
Sawtooth Peak Voltage	$V_{OSC(P)}$	–	4.1	4.5	V
Sawtooth Valley Voltage	$V_{OSC(V)}$	1.2	1.5	–	V
LOGIC INPUTS					
Input Threshold Voltage (Pins 3, 4, 5, 6, 7, 22, 23) High State Low State	 V_{IH} V_{IL}	 3.0 –	 2.2 1.7	 – 0.8	V
Sensor Inputs (Pins 4, 5, 6) High State Input Current (V_{IH} = 5.0 V) Low State Input Current (V_{IL} = 0 V)	 I_{IH} I_{IL}	 –150 –600	 –70 –337	 –20 –150	μA
Forward/Reverse, 60°/$\overline{120°}$ Select (Pins 3, 22, 23) High State Input Current (V_{IH} = 5.0 V) Low State Input Current (V_{IL} = 0 V)	 I_{IH} I_{IL}	 –75 –300	 –36 –175	 –10 –75	μA
Output Enable High State Input Current (V_{IH} = 5.0 V) Low State Input Current (V_{IL} = 0 V)	 I_{IH} I_{IL}	 –60 –60	 –29 –29	 –10 –10	μA
CURRENT–LIMIT COMPARATOR					
Threshold Voltage	V_{th}	85	101	115	mV
Input Common Mode Voltage Range	V_{ICR}	–	3.0	–	V
Input Bias Current	I_{IB}	–	–0.9	–5.0	μA
OUTPUTS AND POWER SECTIONS					
Top Drive Output Sink Saturation (I_{sink} = 25 mA)	$V_{CE(sat)}$	–	0.5	1.5	V
Top Drive Output Off–State Leakage (V_{CE} = 30 V)	$I_{DRV(leak)}$	–	0.06	100	μA
Top Drive Output Switching Time (C_L = 47 pF, R_L = 1.0 k) Rise Time Fall Time	 t_r t_f	 – –	 107 26	 300 300	ns
Bottom Drive Output Voltage High State (V_{CC} = 20 V, V_C = 30 V, I_{source} = 50 mA) Low State (V_{CC} = 20 V, V_C = 30 V, I_{sink} = 50 mA)	 V_{OH} V_{OL}	 (V_{CC} –2.0) –	 (V_{CC} –1.1) 1.5	 – 2.0	V

ELECTRICAL CHARACTERISTICS (V_{CC} = V_C = 20 V, R_T = 4.7 k, C_T = 10 nF, T_A = 25°C, unless otherwise noted.)

Characteristic	Symbol	Min	Typ	Max	Unit
OUTPUTS AND POWER SECTIONS					
Bottom Drive Output Switching Time (C_L = 1000 pF)					ns
Rise Time	t_r	–	38	200	
Fall Time	t_f	–	30	200	
$\overline{\text{Fault}}$ Output Sink Saturation (I_{sink} = 16 mA)	$V_{CE(sat)}$	–	225	500	mV
$\overline{\text{Fault}}$ Output Off−State Leakage (V_{CE} = 20 V)	$I_{FLT(leak)}$	–	1.0	100	μA
Under Voltage Lockout					V
Drive Output Enabled (V_{CC} or V_C Increasing)	$V_{th(on)}$	8.2	8.9	10	
Hysteresis	V_H	0.1	0.2	0.3	
Power Supply Current					mA
Pin 17 (V_{CC} = V_C = 20 V)	I_{CC}	–	12	16	
Pin 17 (V_{CC} = 20 V, V_C = 30 V)		–	14	20	
Pin 18 (V_{CC} = V_C = 20 V)	I_C	–	3.5	6.0	
Pin 18 (V_{CC} = 20 V, V_C = 30 V)		–	5.0	10	

1. The input common mode voltage or input signal voltage should not be allowed to go negative by more than 0.3 V.
2. The compliance voltage must not exceed the range of − 0.3 to V_{ref}.
3. NCV33035: T_{low} = −40°C, T_{high} = 125°C. Guaranteed by design. NCV prefix is for automotive and other applications requiring site and change control.
4. MC33035: T_A = −40°C to +85°C; NCV33035: T_A = −40°C to +125°C.
5. Maximum package power dissipation limits must be observed.

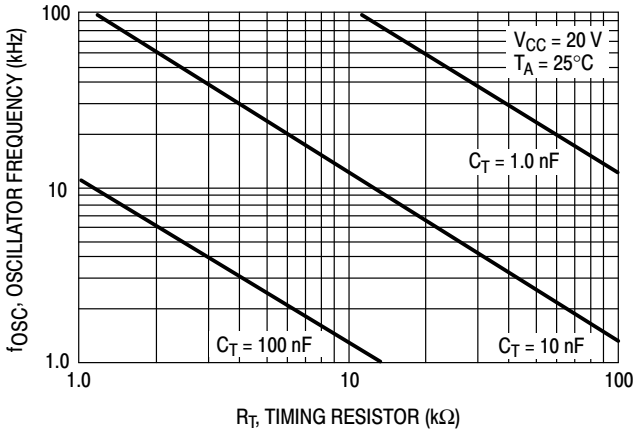

Figure 1. Oscillator Frequency versus Timing Resistor

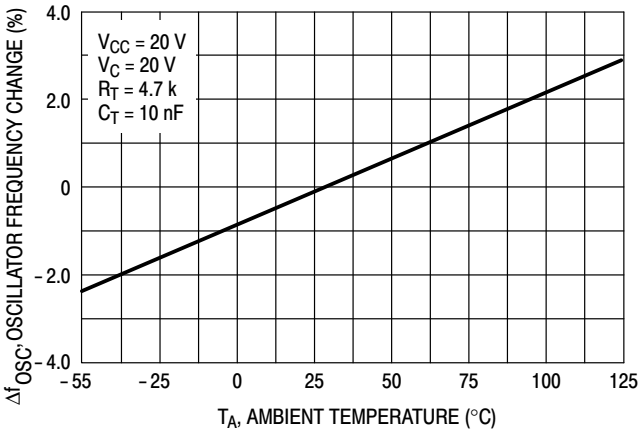

Figure 2. Oscillator Frequency Change versus Temperature

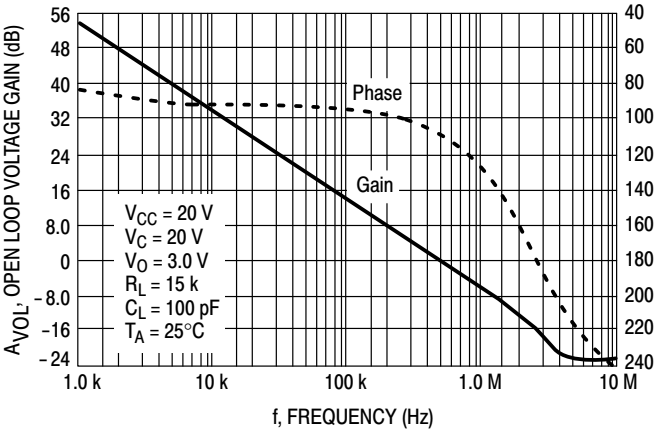

Figure 3. Error Amp Open Loop Gain and Phase versus Frequency

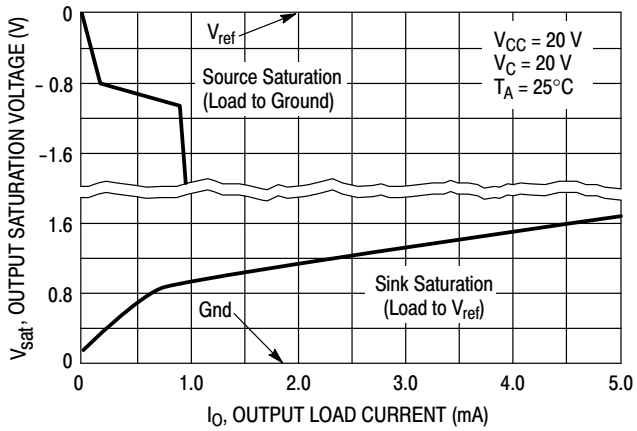

Figure 4. Error Amp Output Saturation Voltage versus Load Current

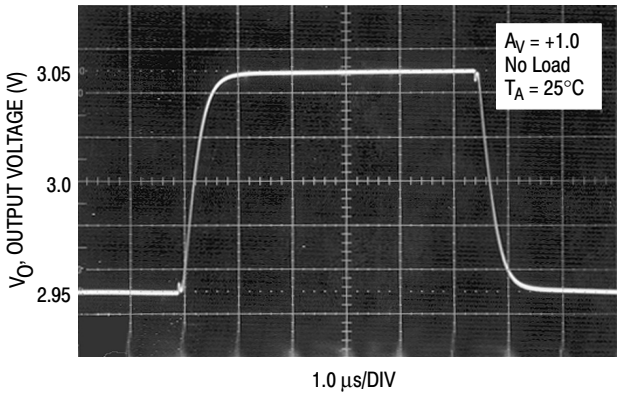

Figure 5. Error Amp Small−Signal Transient Response

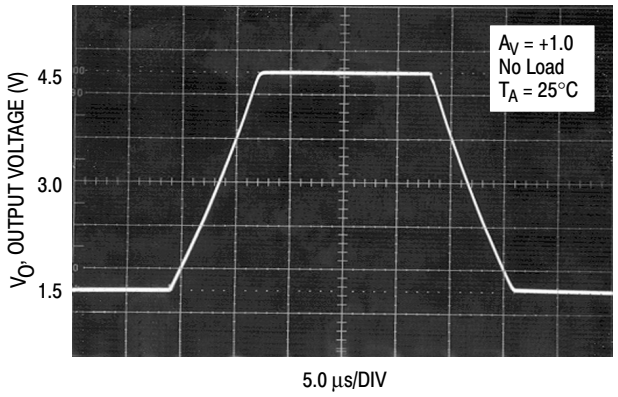

Figure 6. Error Amp Large−Signal Transient Response

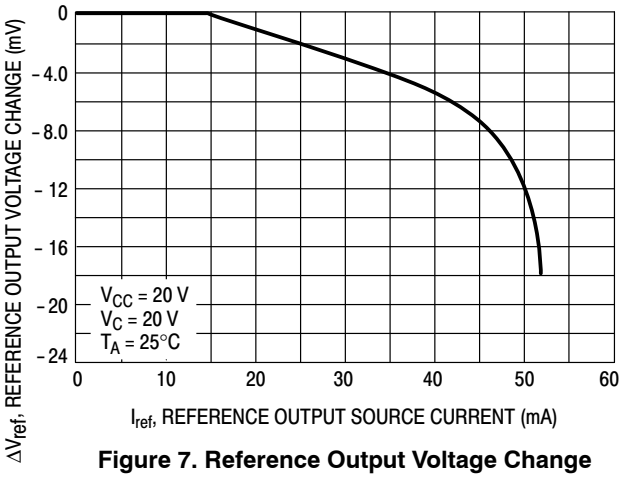

Figure 7. Reference Output Voltage Change versus Output Source Current

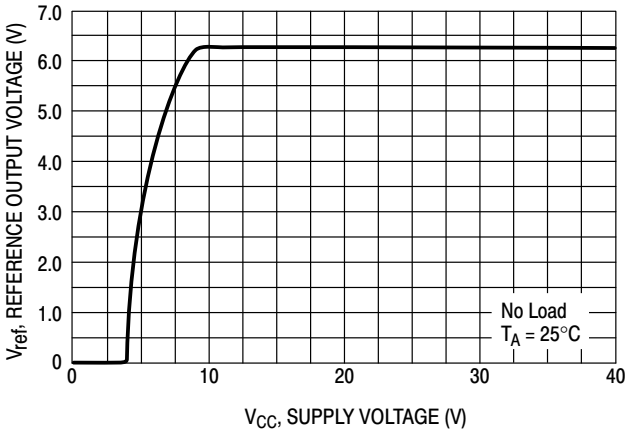

Figure 8. Reference Output Voltage versus Supply Voltage

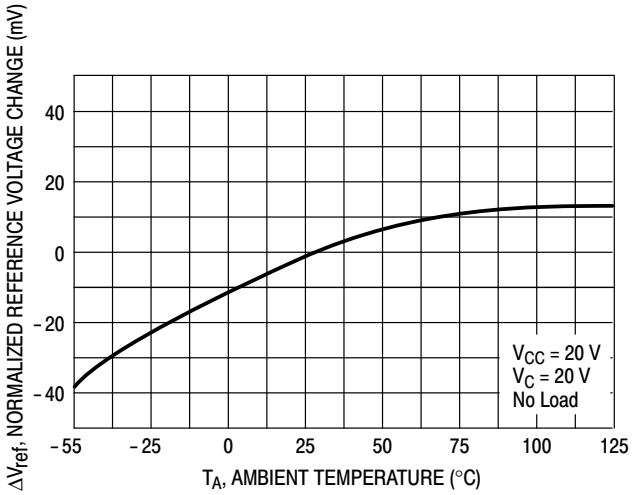

Figure 9. Reference Output Voltage versus Temperature

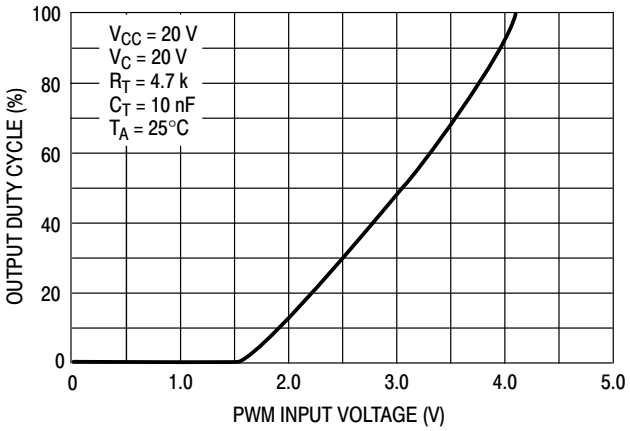

Figure 10. Output Duty Cycle versus PWM Input Voltage

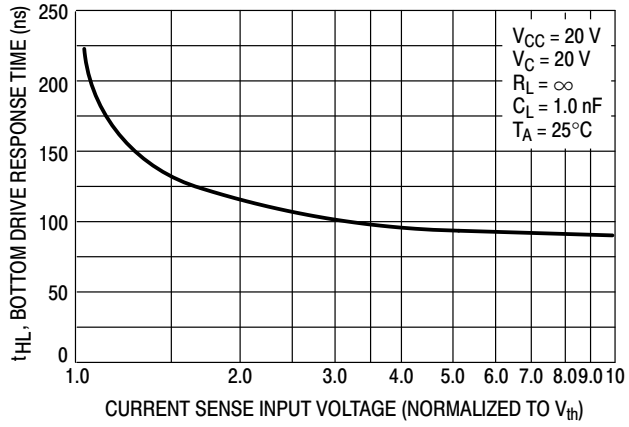

Figure 11. Bottom Drive Response Time versus Current Sense Input Voltage

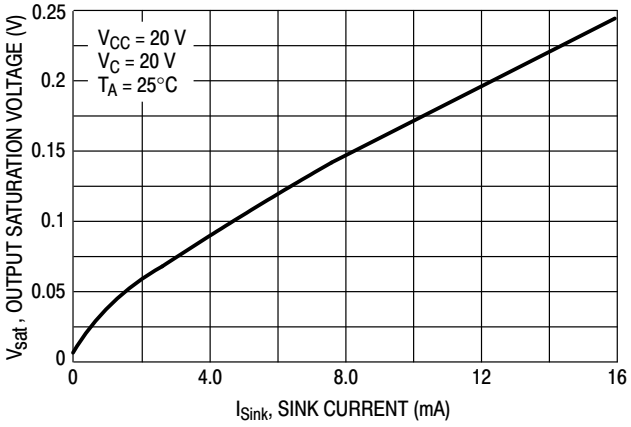

Figure 12. $\overline{\text{Fault}}$ Output Saturation versus Sink Current

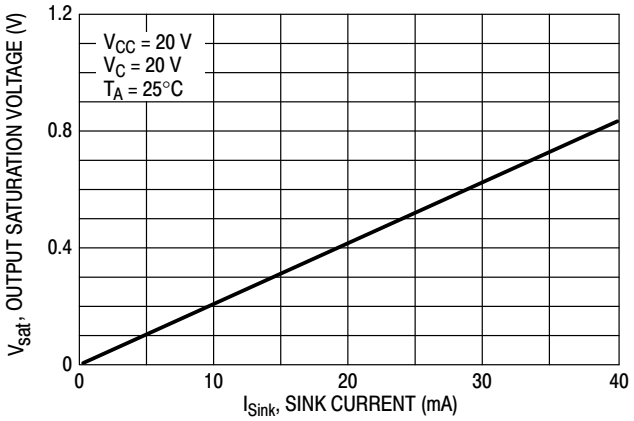

Figure 13. Top Drive Output Saturation Voltage versus Sink Current

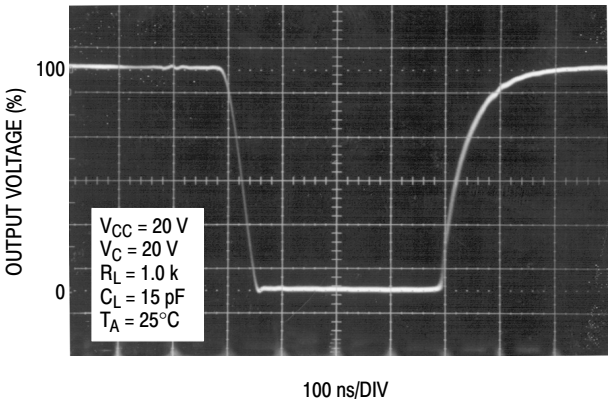

Figure 14. Top Drive Output Waveform

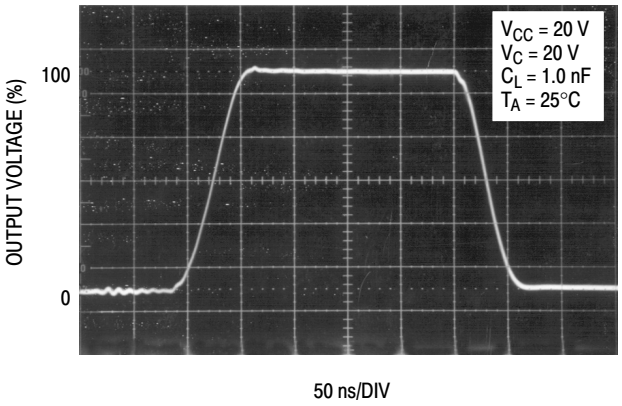

Figure 15. Bottom Drive Output Waveform

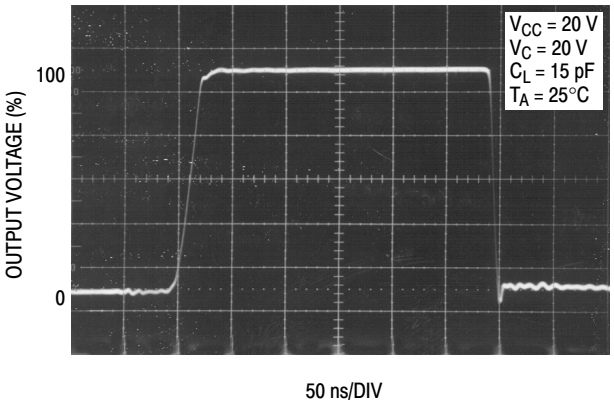

Figure 16. Bottom Drive Output Waveform

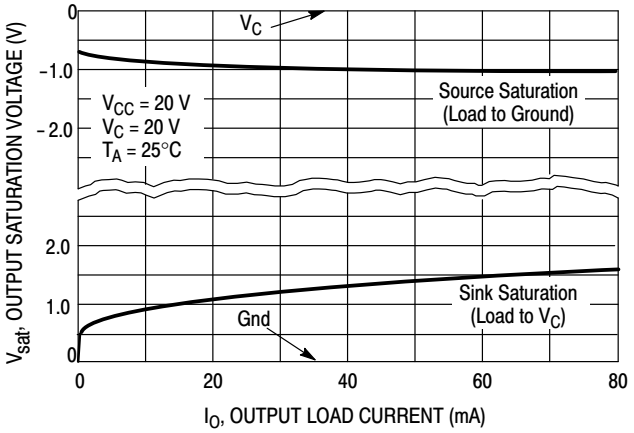

Figure 17. Bottom Drive Output Saturation Voltage versus Load Current

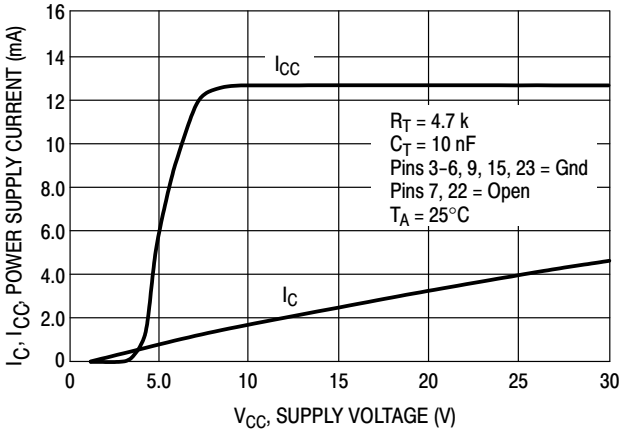

Figure 18. Power and Bottom Drive Supply Current versus Supply Voltage

PIN FUNCTION DESCRIPTION

Pin	Symbol	Description
1, 2, 24	B_T, A_T, C_T	These three open collector Top Drive outputs are designed to drive the external upper power switch transistors.
3	Fwd/Rev	The Forward/Reverse Input is used to change the direction of motor rotation.
4, 5, 6	S_A, S_B, S_C	These three Sensor Inputs control the commutation sequence.
7	Output Enable	A logic high at this input causes the motor to run, while a low causes it to coast.
8	Reference Output	This output provides charging current for the oscillator timing capacitor C_T and a reference for the error amplifier. It may also serve to furnish sensor power.
9	Current Sense Noninverting Input	A 100 mV signal, with respect to Pin 15, at this input terminates output switch conduction during a given oscillator cycle. This pin normally connects to the top side of the current sense resistor.
10	Oscillator	The Oscillator frequency is programmed by the values selected for the timing components, R_T and C_T.
11	Error Amp Noninverting Input	This input is normally connected to the speed set potentiometer.
12	Error Amp Inverting Input	This input is normally connected to the Error Amp Output in open loop applications.
13	Error Amp Out/PWM Input	This pin is available for compensation in closed loop applications.
14	$\overline{\text{Fault}}$ Output	This open collector output is active low during one or more of the following conditions: Invalid Sensor Input code, Enable Input at logic 0, Current Sense Input greater than 100 mV (Pin 9 with respect to Pin 15), Undervoltage Lockout activation, and Thermal Shutdown.
15	Current Sense Inverting Input	Reference pin for internal 100 mV threshold. This pin is normally connected to the bottom side of the current sense resistor.
16	Gnd	This pin supplies a ground for the control circuit and should be referenced back to the power source ground.
17	V_{CC}	This pin is the positive supply of the control IC. The controller is functional over a minimum V_{CC} range of 10 to 30 V.
18	V_C	The high state (V_{OH}) of the Bottom Drive Outputs is set by the voltage applied to this pin. The controller is operational over a minimum V_C range of 10 to 30 V.
19, 20, 21	C_B, B_B, A_B	These three totem pole Bottom Drive Outputs are designed for direct drive of the external bottom power switch transistors.
22	60°/$\overline{120°}$ Select	The electrical state of this pin configures the control circuit operation for either 60° (high state) or 120° (low state) sensor electrical phasing inputs.
23	Brake	A logic low state at this input allows the motor to run, while a high state does not allow motor operation and if operating causes rapid deceleration.

INTRODUCTION

The MC33035 is one of a series of high performance monolithic DC brushless motor controllers produced by Motorola. It contains all of the functions required to implement a full−featured, open loop, three or four phase motor control system. In addition, the controller can be made to operate DC brush motors. Constructed with Bipolar Analog technology, it offers a high degree of performance and ruggedness in hostile industrial environments. The MC33035 contains a rotor position decoder for proper commutation sequencing, a temperature compensated reference capable of supplying a sensor power, a frequency programmable sawtooth oscillator, a fully accessible error amplifier, a pulse width modulator comparator, three open collector top drive outputs, and three high current totem pole bottom driver outputs ideally suited for driving power MOSFETs.

Included in the MC33035 are protective features consisting of undervoltage lockout, cycle−by−cycle current limiting with a selectable time delayed latched shutdown mode, internal thermal shutdown, and a unique fault output that can easily be interfaced to a microprocessor controller.

Typical motor control functions include open loop speed control, forward or reverse rotation, run enable, and dynamic braking. In addition, the MC33035 has a 60°/$\overline{120°}$ select pin which configures the rotor position decoder for either 60° or 120° sensor electrical phasing inputs.

FUNCTIONAL DESCRIPTION

A representative internal block diagram is shown in Figure 19 with various applications shown in Figures 36, 38, 39, 43, 45, and 46. A discussion of the features and function of each of the internal blocks given below is referenced to Figures 19 and 36.

Rotor Position Decoder

An internal rotor position decoder monitors the three sensor inputs (Pins 4, 5, 6) to provide the proper sequencing of the top and bottom drive outputs. The sensor inputs are designed to interface directly with open collector type Hall Effect switches or opto slotted couplers. Internal pull−up resistors are included to minimize the required number of external components. The inputs are TTL compatible, with their thresholds typically at 2.2 V. The MC33035 series is designed to control three phase motors and operate with four of the most common conventions of sensor phasing. A 60°/$\overline{120°}$ Select (Pin 22) is conveniently provided and affords the MC33035 to configure itself to control motors having either 60°, 120°, 240° or 300° electrical sensor phasing. With three sensor inputs there are eight possible input code combinations, six of which are valid rotor positions. The remaining two codes are invalid and are usually caused by an open or shorted sensor line. With six valid input codes, the decoder can resolve the motor rotor position to within a window of 60 electrical degrees.

The Forward/Reverse input (Pin 3) is used to change the direction of motor rotation by reversing the voltage across the stator winding. When the input changes state, from high to low with a given sensor input code (for example 100), the enabled top and bottom drive outputs with the same alpha designation are exchanged (A_T to A_B, B_T to B_B, C_T to C_B). In effect, the commutation sequence is reversed and the motor changes directional rotation.

Motor on/off control is accomplished by the Output Enable (Pin 7). When left disconnected, an internal 25 μA current source enables sequencing of the top and bottom drive outputs. When grounded, the top drive outputs turn off and the bottom drives are forced low, causing the motor to coast and the $\overline{\text{Fault}}$ output to activate.

Dynamic motor braking allows an additional margin of safety to be designed into the final product. Braking is accomplished by placing the Brake Input (Pin 23) in a high state. This causes the top drive outputs to turn off and the bottom drives to turn on, shorting the motor−generated back EMF. The brake input has unconditional priority over all other inputs. The internal 40 kΩ pull−up resistor simplifies interfacing with the system safety−switch by insuring brake activation if opened or disconnected. The commutation logic truth table is shown in Figure 20. A four input NOR gate is used to monitor the brake input and the inputs to the three top drive output transistors. Its purpose is to disable braking until the top drive outputs attain a high state. This helps to prevent simultaneous conduction of the the top and bottom power switches. In half wave motor drive applications, the top drive outputs are not required and are normally left disconnected. Under these conditions braking will still be accomplished since the NOR gate senses the base voltage to the top drive output transistors.

Error Amplifier

A high performance, fully compensated error amplifier with access to both inputs and output (Pins 11, 12, 13) is provided to facilitate the implementation of closed loop motor speed control. The amplifier features a typical DC voltage gain of 80 dB, 0.6 MHz gain bandwidth, and a wide input common mode voltage range that extends from ground to V_{ref}. In most open loop speed control applications, the amplifier is configured as a unity gain voltage follower with the noninverting input connected to the speed set voltage source. Additional configurations are shown in Figures 31 through 35.

Oscillator

The frequency of the internal ramp oscillator is programmed by the values selected for timing components R_T and C_T. Capacitor C_T is charged from the Reference Output (Pin 8) through resistor R_T and discharged by an internal discharge transistor. The ramp peak and valley voltages are typically 4.1 V and 1.5 V respectively. To provide a good compromise between audible noise and output switching efficiency, an oscillator frequency in the range of 20 to 30 kHz is recommended. Refer to Figure 1 for component selection.

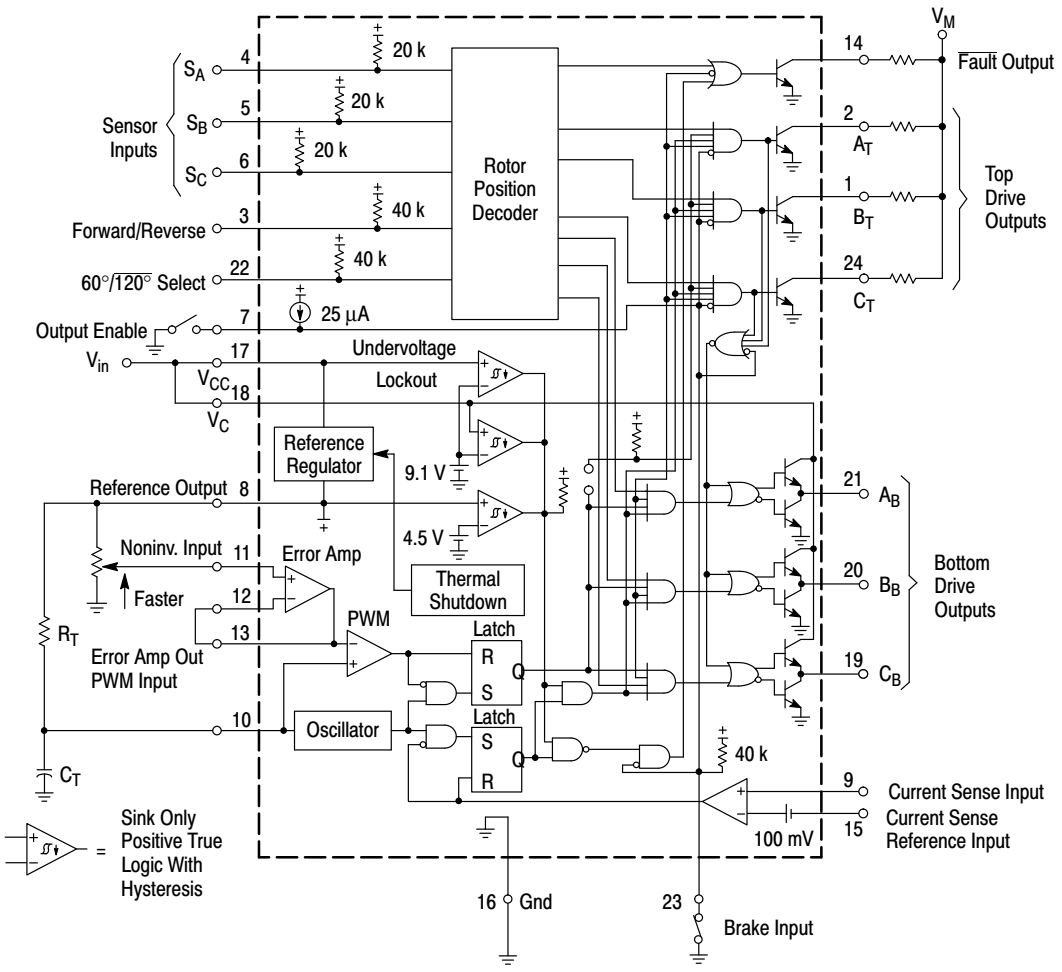

Figure 19. Representative Block Diagram

Inputs (Note 2)										Outputs (Note 3)							
Sensor Electrical Phasing (Note 4)										Top Drives			Bottom Drives				
60°			120°														
S_A	S_B	S_C	S_A	S_B	S_C	F/R	Enable	Brake	Current Sense	A_T	B_T	C_T	A_B	B_B	C_B	$\overline{Fault}$	
1	0	0	1	0	0	1	1	0	0	0	1	1	0	0	1	1	**(Note 5)** F/R = 1
1	1	0	1	1	0	1	1	0	0	1	0	1	0	0	1	1	
1	1	1	0	1	0	1	1	0	0	1	0	1	1	0	0	1	
0	1	1	0	1	1	1	1	0	0	1	1	0	1	0	0	1	
0	0	1	0	0	1	1	1	0	0	1	1	0	0	1	0	1	
0	0	0	1	0	1	1	1	0	0	0	1	1	0	1	0	1	
1	0	0	1	0	0	0	1	0	0	1	1	0	1	0	0	1	**(Note 5)** F/R = 0
1	1	0	1	1	0	0	1	0	0	1	1	0	0	1	0	1	
1	1	1	0	1	0	0	1	0	0	0	1	1	0	1	0	1	
0	1	1	0	1	1	0	1	0	0	0	1	1	0	0	1	1	
0	0	1	0	0	1	0	1	0	0	1	0	1	0	0	1	1	
0	0	0	1	0	1	0	1	0	0	1	0	1	1	0	0	1	
1	0	1	1	1	1	X	X	0	X	1	1	1	0	0	0	0	**(Note 6)** Brake = 0
0	1	0	0	0	0	X	X	0	X	1	1	1	0	0	0	0	
1	0	1	1	1	1	X	X	1	X	1	1	1	1	1	1	0	**(Note 7)** Brake = 1
0	1	0	0	0	0	X	X	1	X	1	1	1	1	1	1	0	
V	V	V	V	V	V	X	1	1	X	1	1	1	1	1	1	1	**(Note 8)**
V	V	V	V	V	V	X	0	1	X	1	1	1	1	1	1	0	**(Note 9)**
V	V	V	V	V	V	X	0	0	X	1	1	1	0	0	0	0	**(Note 10)**

V	V	V	V	V	V	X	1	0	1	1	1	1	0	0	0	0	**(Note 11)**

NOTES: 1. V = Any one of six valid sensor or drive combinations X = Don't care.
2. The digital inputs (Pins 3, 4, 5, 6, 7, 22, 23) are all TTL compatible. The current sense input (Pin 9) has a 100 mV threshold with respect to Pin 15. A logic 0 for this input is defined as < 85 mV, and a logic 1 is > 115 mV.
3. The fault and top drive outputs are open collector design and active in the low (0) state.
4. With 60°/$\overline{120°}$ select (Pin 22) in the high (1) state, configuration is for 60° sensor electrical phasing inputs. With Pin 22 in low (0) state, configuration is for 120° sensor electrical phasing inputs.
5. Valid 60° or 120° sensor combinations for corresponding valid top and bottom drive outputs.
6. Invalid sensor inputs with brake = 0; All top and bottom drives off, $\overline{\text{Fault}}$ low.
7. Invalid sensor inputs with brake = 1; All top drives off, all bottom drives on, $\overline{\text{Fault}}$ low.
8. Valid 60° or 120° sensor inputs with brake = 1; All top drives off, all bottom drives on, $\overline{\text{Fault}}$ high.
9. Valid sensor inputs with brake = 1 and enable = 0; All top drives off, all bottom drives on, $\overline{\text{Fault}}$ low.
10. Valid sensor inputs with brake = 0 and enable = 0; All top and bottom drives off, $\overline{\text{Fault}}$ low.
11. All bottom drives off, $\overline{\text{Fault}}$ low.

Figure 20. Three Phase, Six Step Commutation Truth Table (Note 1)

Pulse Width Modulator

The use of pulse width modulation provides an energy efficient method of controlling the motor speed by varying the average voltage applied to each stator winding during the commutation sequence. As C_T discharges, the oscillator sets both latches, allowing conduction of the top and bottom drive outputs. The PWM comparator resets the upper latch, terminating the bottom drive output conduction when the positive−going ramp of C_T becomes greater than the error amplifier output. The pulse width modulator timing diagram is shown in Figure 21. Pulse width modulation for speed control appears only at the bottom drive outputs.

Current Limit

Continuous operation of a motor that is severely over−loaded results in overheating and eventual failure. This destructive condition can best be prevented with the use of cycle−by−cycle current limiting. That is, each on−cycle is treated as a separate event. Cycle−by−cycle current limiting is accomplished by monitoring the stator current build−up each time an output switch conducts, and upon sensing an over current condition, immediately turning off the switch and holding it off for the remaining duration of oscillator ramp−up period. The stator current is converted to a voltage by inserting a ground−referenced sense resistor R_S (Figure 36) in series with the three bottom switch transistors (Q_4, Q_5, Q_6). The voltage developed across the sense resistor is monitored by the Current Sense Input (Pins 9 and 15), and compared to the internal 100 mV reference. The current sense comparator inputs have an input common mode range of approximately 3.0 V. If the 100 mV current sense threshold is exceeded, the comparator resets the lower sense latch and terminates output switch conduction. The value for the current sense resistor is:

$$R_S = \frac{0.1}{I_{stator(max)}}$$

The $\overline{\text{Fault}}$ output activates during an over current condition. The dual−latch PWM configuration ensures that only one single output conduction pulse occurs during any given oscillator cycle, whether terminated by the output of the error amp or the current limit comparator.

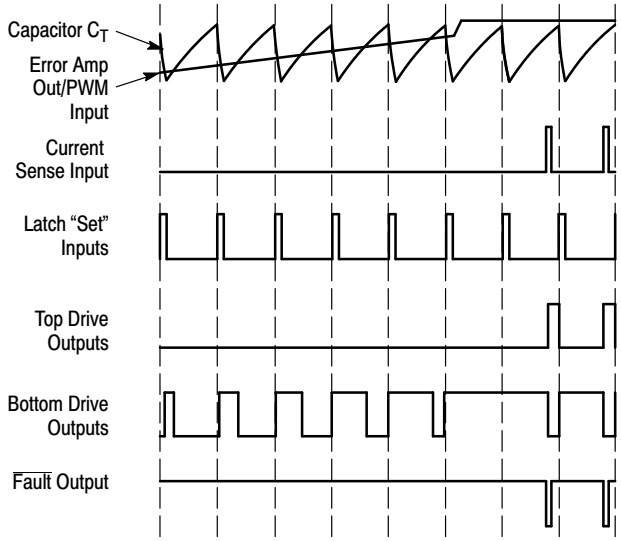

Figure 21. Pulse Width Modulator Timing Diagram

Reference

The on−chip 6.25 V regulator (Pin 8) provides charging current for the oscillator timing capacitor, a reference for the error amplifier, and can supply 20 mA of current suitable for directly powering sensors in low voltage applications. In higher voltage applications, it may become necessary to transfer the power dissipated by the regulator off the IC. This is easily accomplished with the addition of an external pass transistor as shown in Figure 22. A 6.25 V reference level was chosen to allow implementation of the simpler NPN circuit, where $V_{ref} - V_{BE}$ exceeds the minimum voltage required by Hall Effect sensors over temperature. With proper transistor selection and adequate heatsinking, up to one amp of load current can be obtained.

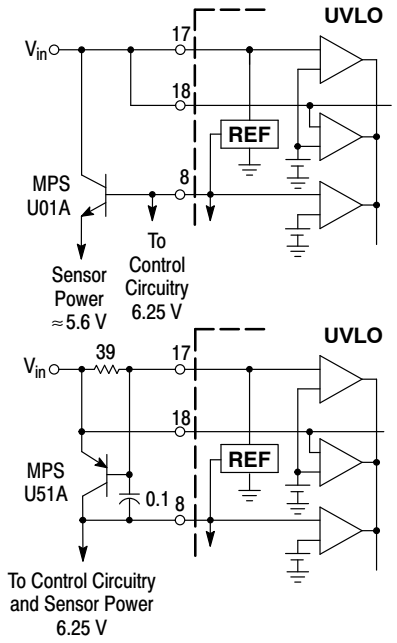

The NPN circuit is recommended for powering Hall or opto sensors, where the output voltage temperature coefficient is not critical. The PNP circuit is slightly more complex, but is also more accurate over temperature. Neither circuit has current limiting.

Figure 22. Reference Output Buffers

Undervoltage Lockout

A triple Undervoltage Lockout has been incorporated to prevent damage to the IC and the external power switch transistors. Under low power supply conditions, it guarantees that the IC and sensors are fully functional, and that there is sufficient bottom drive output voltage. The positive power supplies to the IC (V_{CC}) and the bottom drives (V_C) are each monitored by separate comparators that have their thresholds at 9.1 V. This level ensures sufficient gate drive necessary to attain low $R_{DS(on)}$ when driving standard power MOSFET devices. When directly powering the Hall sensors from the reference, improper sensor operation can result if the reference output voltage falls below 4.5 V. A third comparator is used to detect this condition. If one or more of the comparators detects an undervoltage condition, the $\overline{\text{Fault}}$ Output is activated, the top drives are turned off and the bottom drive outputs are held in a low state. Each of the comparators contain hysteresis to prevent oscillations when crossing their respective thresholds.

$\overline{\text{Fault}}$ Output

The open collector $\overline{\text{Fault}}$ Output (Pin 14) was designed to provide diagnostic information in the event of a system malfunction. It has a sink current capability of 16 mA and can directly drive a light emitting diode for visual indication. Additionally, it is easily interfaced with TTL/CMOS logic for use in a microprocessor controlled system. The $\overline{\text{Fault}}$ Output is active low when one or more of the following conditions occur:

1) Invalid Sensor Input code
2) Output Enable at logic [0]
3) Current Sense Input greater than 100 mV
4) Undervoltage Lockout, activation of one or more of the comparators
5) Thermal Shutdown, maximum junction temperature being exceeded

This unique output can also be used to distinguish between motor start−up or sustained operation in an overloaded condition. With the addition of an RC network between the $\overline{\text{Fault}}$ Output and the enable input, it is possible to create a time−delayed latched shutdown for overcurrent. The added circuitry shown in Figure 23 makes easy starting of motor systems which have high inertial loads by providing additional starting torque, while still preserving overcurrent protection. This task is accomplished by setting the current limit to a higher than nominal value for a predetermined time. During an excessively long overcurrent condition, capacitor C_{DLY} will charge, causing the enable input to cross its threshold to a low state. A latch is then formed by the positive feedback loop from the $\overline{\text{Fault}}$ Output to the Output Enable. Once set, by the Current Sense Input, it can only be reset by shorting C_{DLY} or cycling the power supplies.

Drive Outputs

The three top drive outputs (Pins 1, 2, 24) are open collector NPN transistors capable of sinking 50 mA with a minimum breakdown of 30 V. Interfacing into higher voltage applications is easily accomplished with the circuits shown in Figures 24 and 25.

The three totem pole bottom drive outputs (Pins 19, 20, 21) are particularly suited for direct drive of N−Channel MOSFETs or NPN bipolar transistors (Figures 26, 27, 28 and 29). Each output is capable of sourcing and sinking up to 100 mA. Power for the bottom drives is supplied from V_C (Pin 18). This separate supply input allows the designer added flexibility in tailoring the drive voltage, independent of V_{CC}. A zener clamp should be connected to this input when driving power MOSFETs in systems where V_{CC} is greater than 20 V so as to prevent rupture of the MOSFET gates.

The control circuitry ground (Pin 16) and current sense inverting input (Pin 15) must return on separate paths to the central input source ground.

Thermal Shutdown

Internal thermal shutdown circuitry is provided to protect the IC in the event the maximum junction temperature is exceeded. When activated, typically at 170°C, the IC acts as though the Output Enable was grounded.

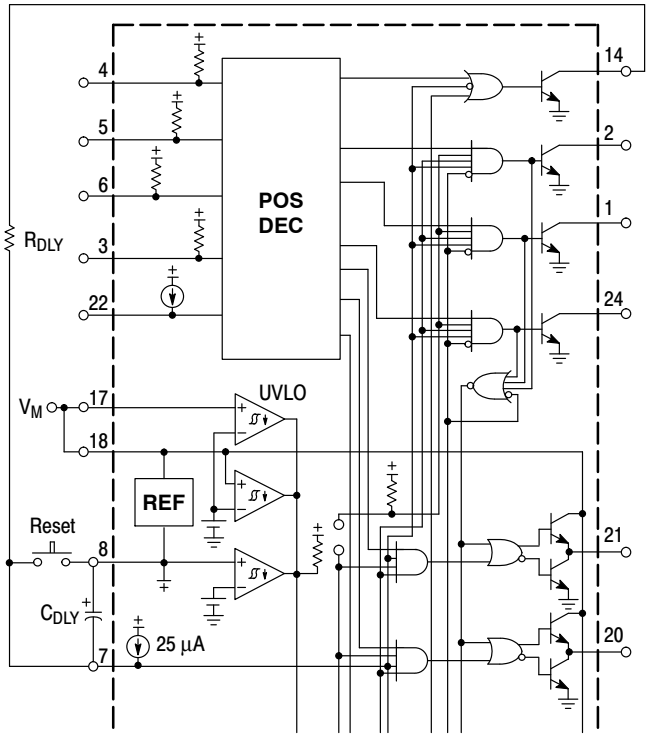

$$t_{DLY} \approx R_{DLY}\, C_{DLY}\, \ln\left(\frac{V_{ref} - (I_{IL}\ \text{enable}\ R_{DLY})}{V_{th}\ \text{enable} - (I_{IL}\ \text{enable}\ R_{DLY})}\right)$$

$$\approx R_{DLY}\, C_{DLY}\, \ln\left(\frac{6.25 - (20 \times 10^{-6}\, R_{DLY})}{1.4 - (20 \times 10^{-6}\, R_{DLY})}\right)$$

Figure 23. Timed Delayed Latched Over Current Shutdown

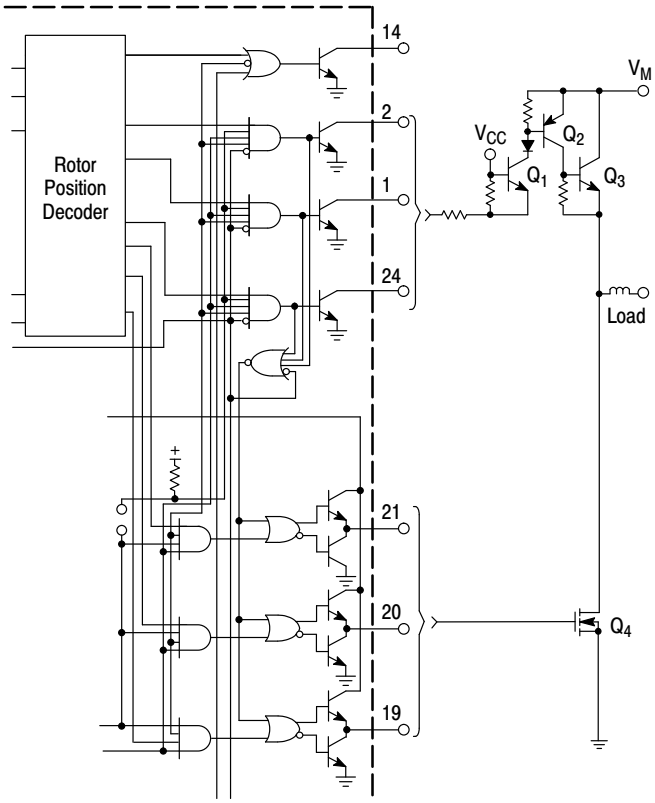

Transistor Q_1 is a common base stage used to level shift from V_{CC} to the high motor voltage, V_M. The collector diode is required if V_{CC} is present while V_M is low.

Figure 24. High Voltage Interface with NPN Power Transistors

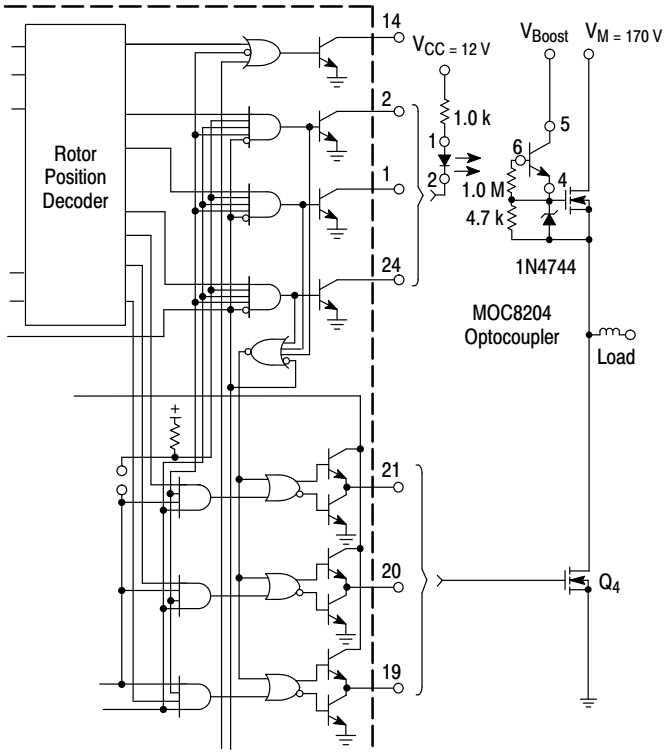

Figure 25. High Voltage Interface with N−Channel Power MOSFETs

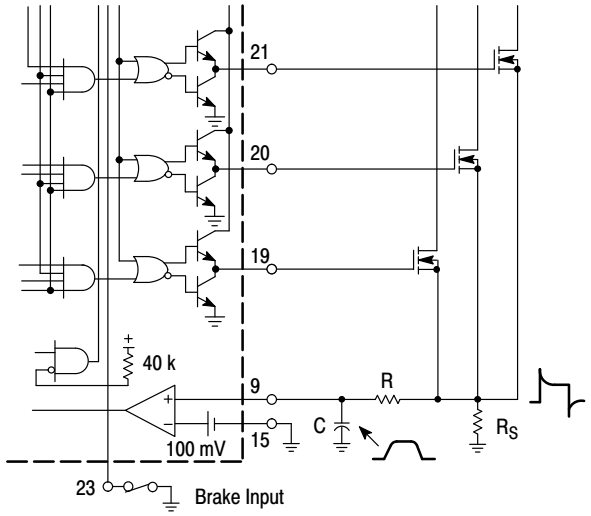

The addition of the RC filter will eliminate current−limit instability caused by the leading edge spike on the current waveform. Resistor R_S should be a low inductance type.

Figure 26. Current Waveform Spike Suppression

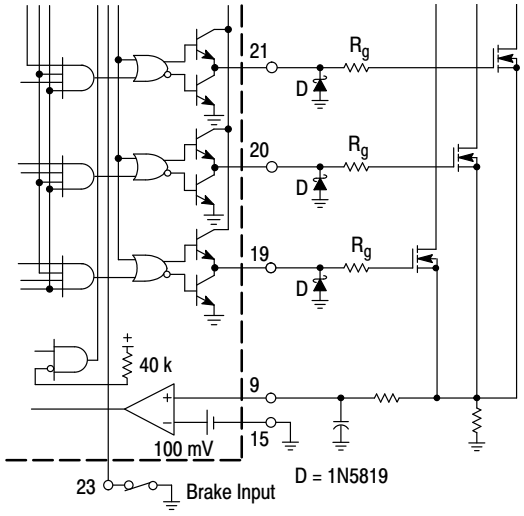

Series gate resistor R_g will dampen any high frequency oscillations caused by the MOSFET input capacitance and any series wiring induction in the gate−source circuit. Diode D is required if the negative current into the Bottom Drive Outputs exceeds 50 mA.

Figure 27. MOSFET Drive Precautions

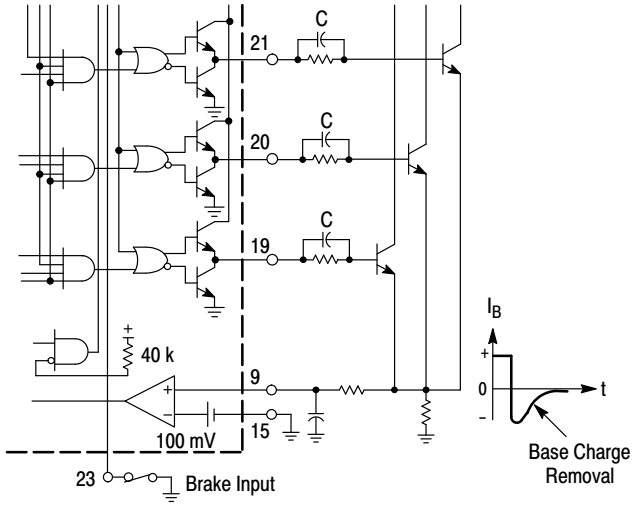

The totem−pole output can furnish negative base current for enhanced transistor turn−off, with the addition of capacitor C.

Figure 28. Bipolar Transistor Drive

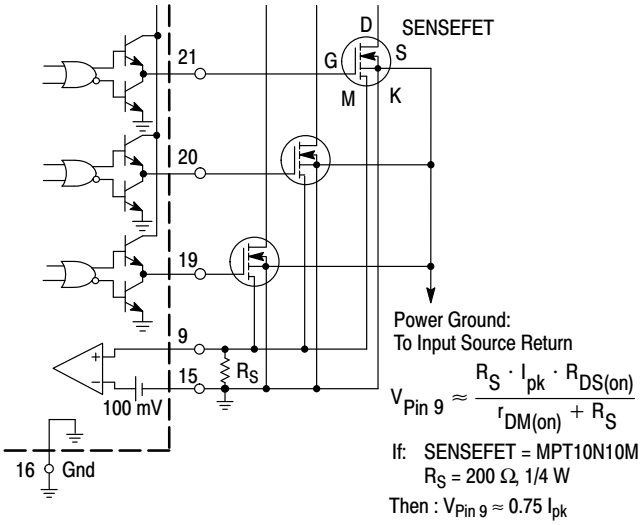

Control Circuitry Ground (Pin 16) and Current Sense Inverting Input (Pin 15) must return on separate paths to the Central Input Source Ground.

Virtually lossless current sensing can be achieved with the implementation of SENSEFET power switches.

Figure 29. Current Sensing Power MOSFETs

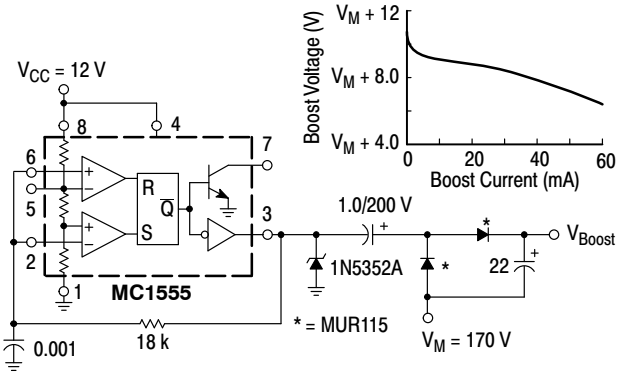

This circuit generates V_{Boost} for Figure 25.

Figure 30. High Voltage Boost Supply

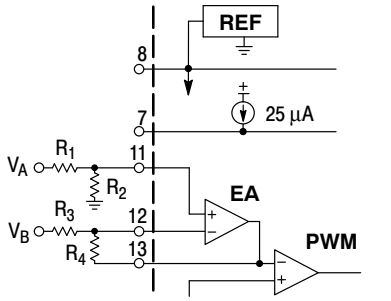

$$V_{Pin\ 13} = V_A\left(\frac{R_3 + R_4}{R_1 + R_2}\right)\frac{R_2}{R_3} - \left(\frac{R_4}{R_3}V_B\right)$$

Figure 31. Differential Input Speed Controller

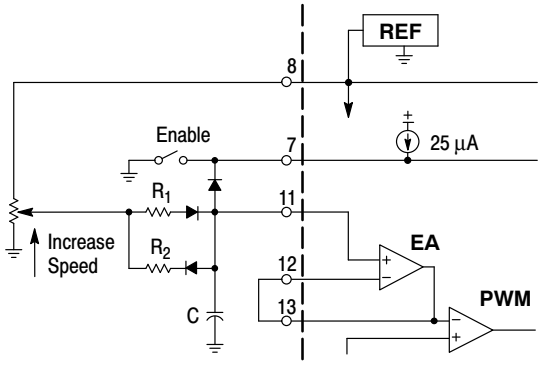

Resistor R_1 with capacitor C sets the acceleration time constant while R_2 controls the deceleration. The values of R_1 and R_2 should be at least ten times greater than the speed set potentiometer to minimize time constant variations with different speed settings.

Figure 32. Controlled Acceleration/Deceleration

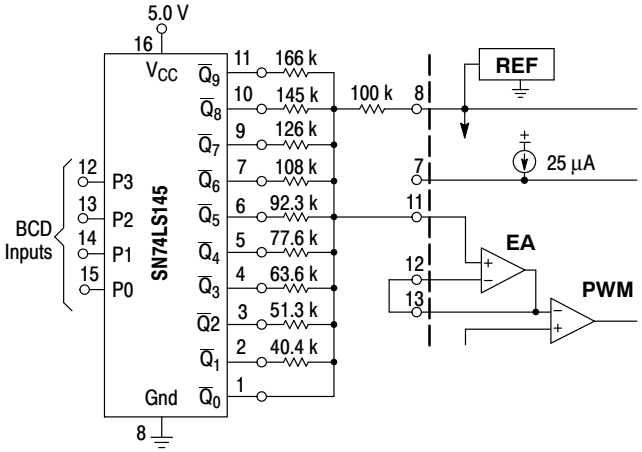

The SN74LS145 is an open collector BCD to One of Ten decoder. When connected as shown, input codes 0000 through 1001 steps the PWM in increments of approximately 10% from 0 to 90% on−time. Input codes 1010 through 1111 will produce 100% on−time or full motor speed.

Figure 33. Digital Speed Controller

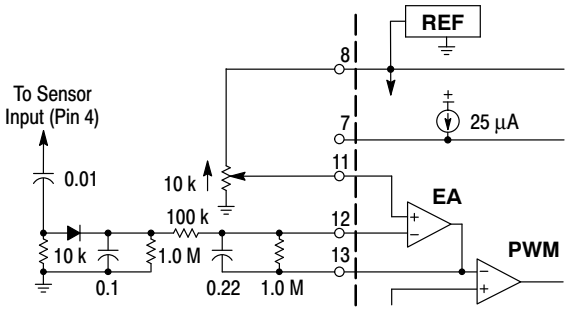

The rotor position sensors can be used as a tachometer. By differentiating the positive−going edges and then integrating them over time, a voltage proportional to speed can be generated. The error amp compares this voltage to that of the speed set to control the PWM.

Figure 34. Closed Loop Speed Control

$$V_{Pin\ 3} = V_{ref}\left(\frac{R_3 + R_4}{R_1 + R_2}\right)\frac{R_2}{R_3} - \left(\frac{R_4}{R_3}V_B\right)$$

$$V_B = \frac{V_{ref}}{\left(\frac{R_5}{R_6} + 1\right)}$$

$$R_3 >> R_5 \parallel R_6$$

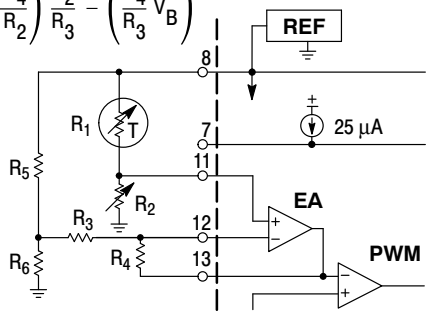

This circuit can control the speed of a cooling fan proportional to the difference between the sensor and set temperatures. The control loop is closed as the forced air cools the NTC thermistor. For controlled heating applications, exchange the positions of R_1 and R_2.

Figure 35. Closed Loop Temperature Control

SYSTEM APPLICATIONS

Three Phase Motor Commutation

The three phase application shown in Figure 36 is a full−featured open loop motor controller with full wave, six step drive. The upper power switch transistors are Darlingtons while the lower devices are power MOSFETs. Each of these devices contains an internal parasitic catch diode that is used to return the stator inductive energy back to the power supply. The outputs are capable of driving a delta or wye connected stator, and a grounded neutral wye if split supplies are used. At any given rotor position, only one top and one bottom power switch (of different totem poles) is enabled. This configuration switches both ends of the stator winding from supply to ground which causes the current flow to be bidirectional or full wave. A leading edge spike is usually present on the current waveform and can cause a current−limit instability. The spike can be eliminated by adding an RC filter in series with the Current Sense Input. Using a low inductance type resistor for R_S will also aid in spike reduction. Care must be taken in the selection of the bottom power switch transistors so that the current during braking does not exceed the device rating. During braking, the peak current generated is limited only by the series resistance of the conducting bottom switch and winding.

$$I_{peak} = \frac{V_M + EMF}{R_{switch} + R_{winding}}$$

If the motor is running at maximum speed with no load, the generated back EMF can be as high as the supply voltage, and at the onset of braking, the peak current may approach twice the motor stall current. Figure 37 shows the commutation waveforms over two electrical cycles. The first cycle (0° to 360°) depicts motor operation at full speed while the second cycle (360° to 720°) shows a reduced speed with about 50% pulse width modulation. The current waveforms reflect a constant torque load and are shown synchronous to the commutation frequency for clarity.

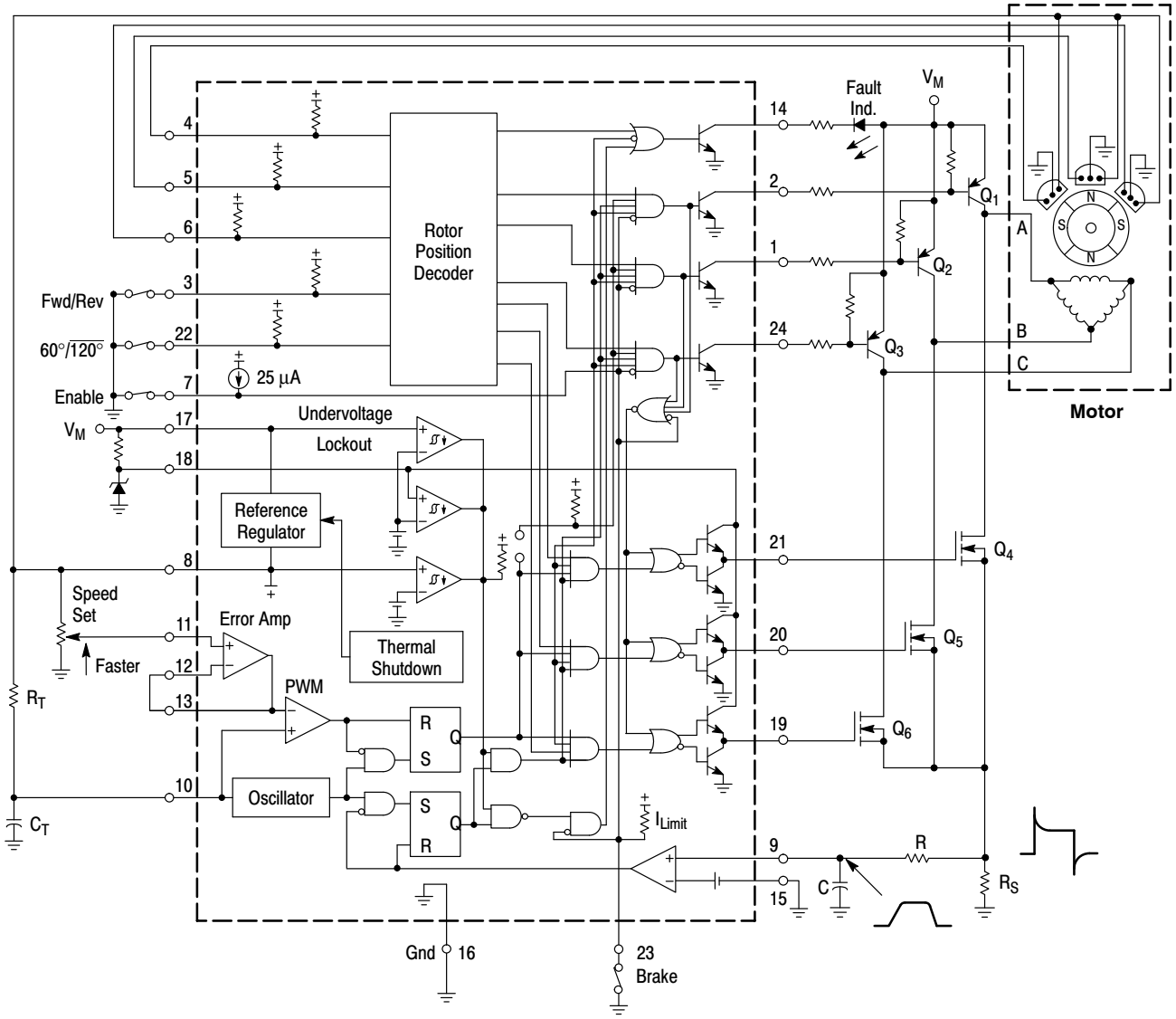

Figure 36. Three Phase, Six Step, Full Wave Motor Controller

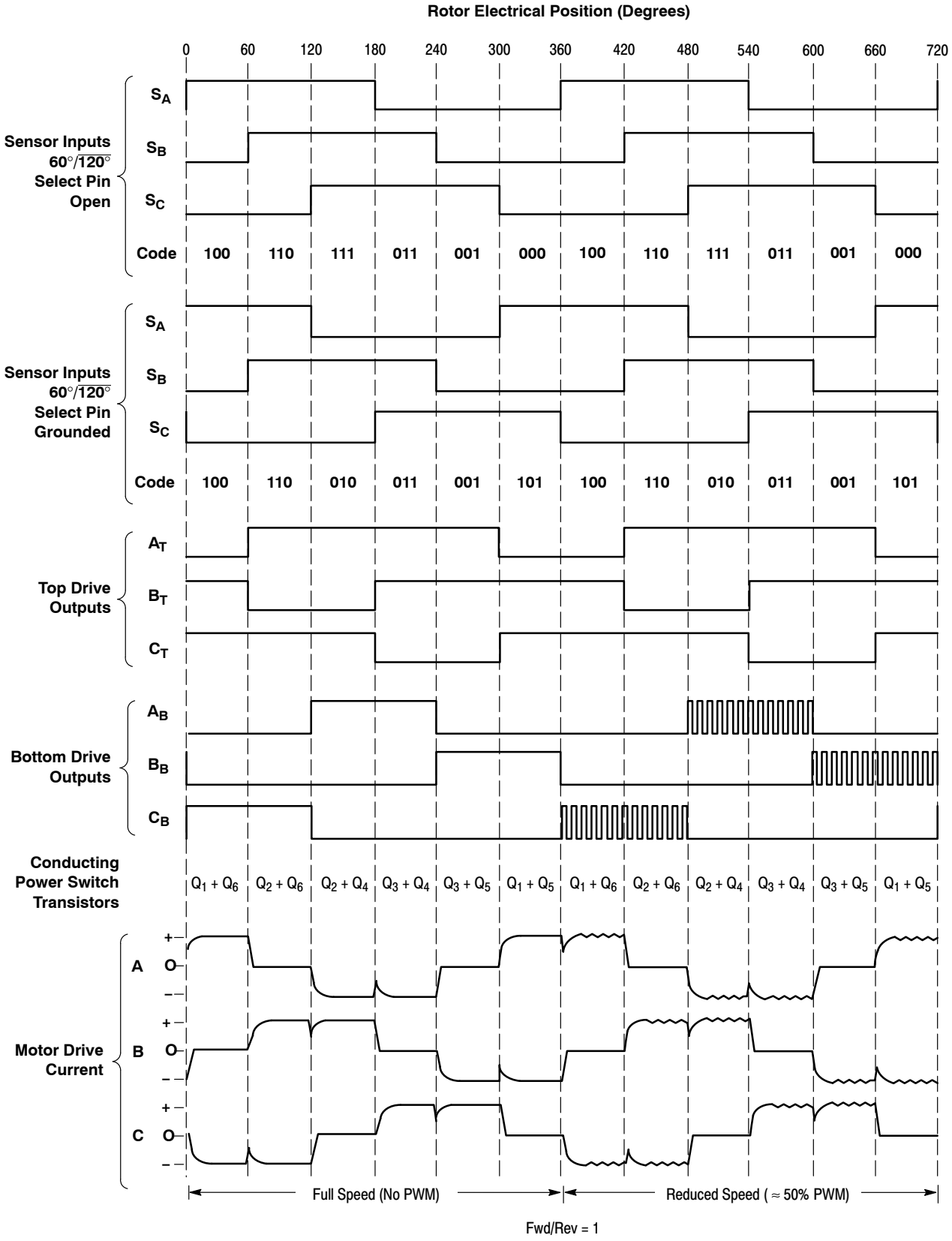

Figure 37. Three Phase, Six Step, Full Wave Commutation Waveforms

Figure 38 shows a three phase, three step, half wave motor controller. This configuration is ideally suited for automotive and other low voltage applications since there is only one power switch voltage drop in series with a given stator winding. Current flow is unidirectional or half wave because only one end of each winding is switched. Continuous braking with the typical half wave arrangement presents a motor overheating problem since stator current is limited only by the winding resistance. This is due to the lack of upper power switch transistors, as in the full wave circuit, used to disconnect the windings from the supply voltage V_M. A unique solution is to provide braking until the motor stops and then turn off the bottom drives. This can be accomplished by using the $\overline{\text{Fault}}$ Output in conjunction with the Output Enable as an over current timer. Components R_{DLY} and C_{DLY} are selected to give the motor sufficient time to stop before latching the Output Enable and the top drive AND gates low. When enabling the motor, the brake switch is closed and the PNP transistor (along with resistors R_1 and R_{DLY}) are used to reset the latch by discharging C_{DLY}. The stator flyback voltage is clamped by a single zener and three diodes.

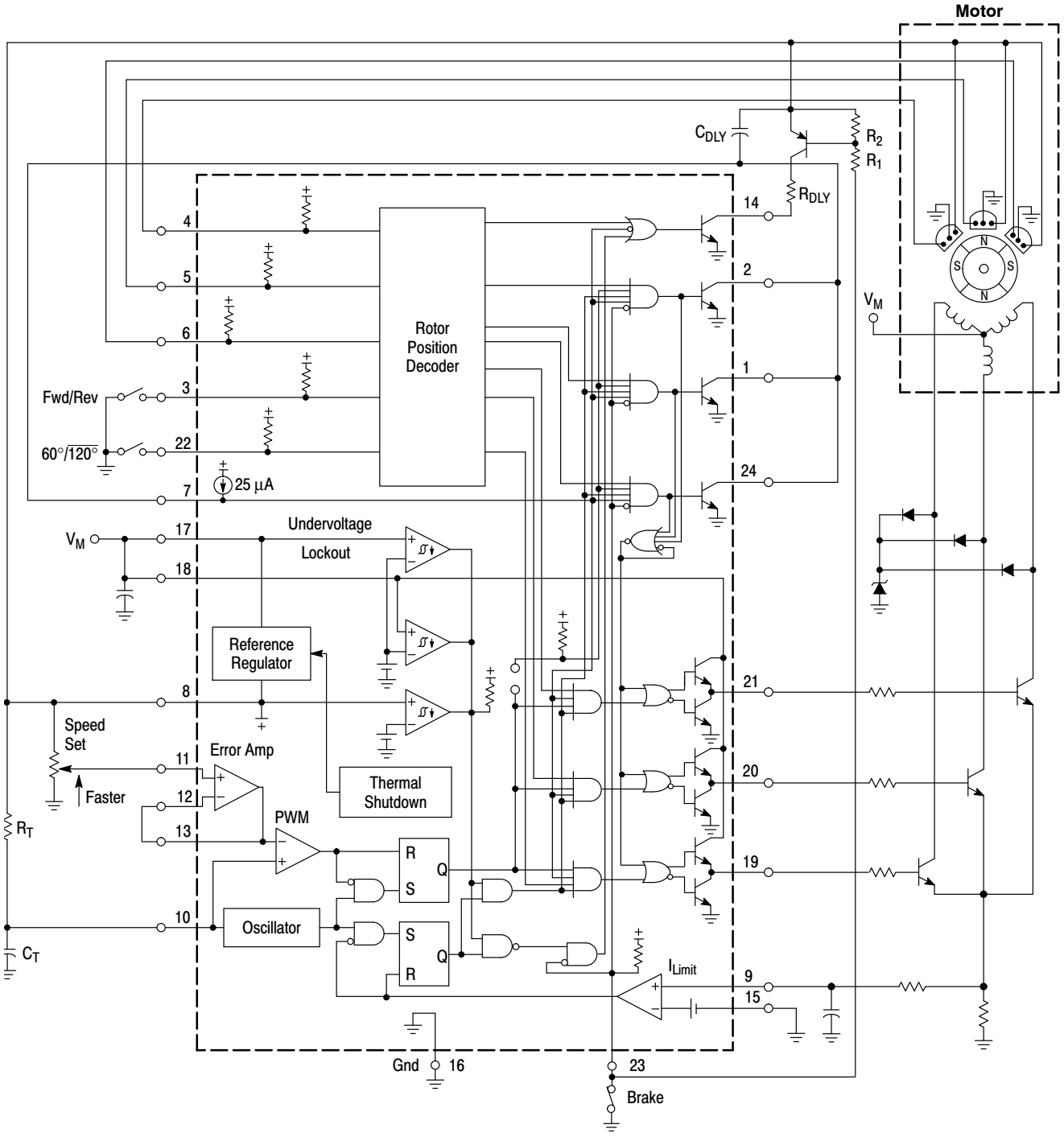

Figure 38. Three Phase, Three Step, Half Wave Motor Controller

Three Phase Closed Loop Controller

The MC33035, by itself, is only capable of open loop motor speed control. For closed loop motor speed control, the MC33035 requires an input voltage proportional to the motor speed. Traditionally, this has been accomplished by means of a tachometer to generate the motor speed feedback voltage. Figure 39 shows an application whereby an MC33039, powered from the 6.25 V reference (Pin 8) of the MC33035, is used to generate the required feedback voltage without the need of a costly tachometer. The same Hall sensor signals used by the MC33035 for rotor position decoding are utilized by the MC33039. Every positive or negative going transition of the Hall sensor signals on any of the sensor lines causes the MC33039 to produce an output pulse of defined amplitude and time duration, as determined by the external resistor R_1 and capacitor C_1. The output train of pulses at Pin 5 of the MC33039 are integrated by the error amplifier of the MC33035 configured as an integrator to produce a DC voltage level which is proportional to the motor speed. This speed proportional voltage establishes the PWM reference level at Pin 13 of the MC33035 motor controller and closes the feedback loop. The MC33035 outputs drive a TMOS power MOSFET 3−phase bridge. High currents can be expected during conditions of start−up, breaking, and change of direction of the motor.

The system shown in Figure 39 is designed for a motor having 120/240 degrees Hall sensor electrical phasing. The system can easily be modified to accommodate 60/300 degree Hall sensor electrical phasing by removing the jumper (J_2) at Pin 22 of the MC33035.

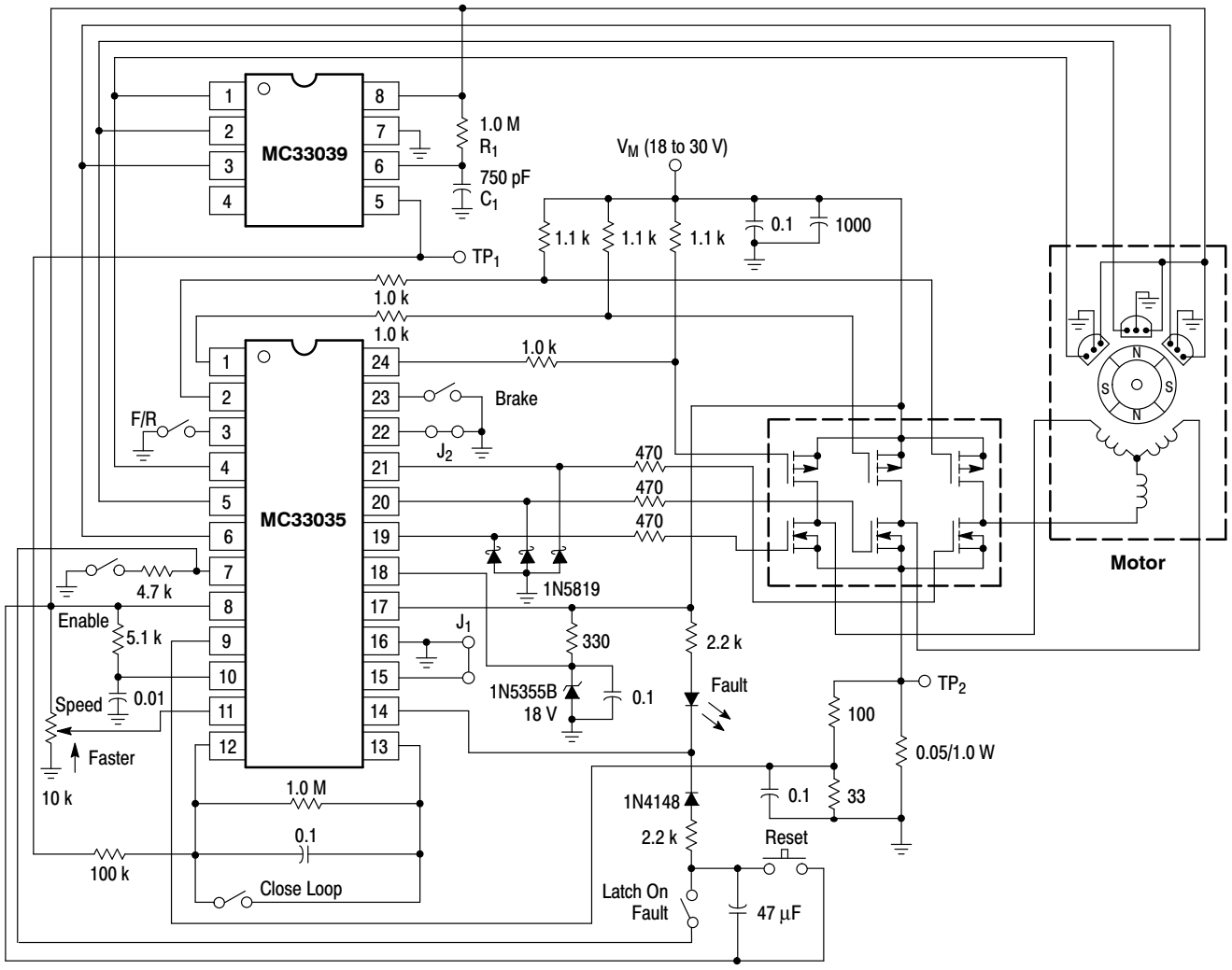

Figure 39. Closed Loop Brushless DC Motor Control Using The MC33035 and MC33039

Sensor Phasing Comparison

There are four conventions used to establish the relative phasing of the sensor signals in three phase motors. With six step drive, an input signal change must occur every 60 electrical degrees; however, the relative signal phasing is dependent upon the mechanical sensor placement. A comparison of the conventions in electrical degrees is shown in Figure 40. From the sensor phasing table in Figure 41, note that the order of input codes for 60° phasing is the reverse of 300°. This means the MC33035, when configured for 60° sensor electrical phasing, will operate a motor with either 60° or 300° sensor electrical phasing, but resulting in opposite directions of rotation. The same is true for the part when it is configured for 120° sensor electrical phasing; the motor will operate equally, but will result in opposite directions of rotation for 120° for 240° conventions.

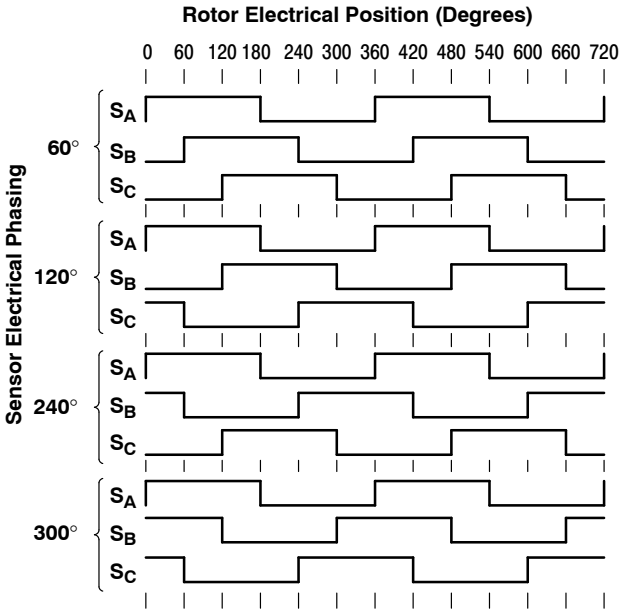

Figure 40. Sensor Phasing Comparison

Sensor Electrical Phasing (Degrees)												
60°			120°			240°			300°			
S_A	S_B	S_C	S_A	S_B	S_C	S_A	S_B	S_C	S_A	S_B	S_C	
1	**0**	**0**	1	0	1	1	1	0	1	**1**	1	
1	**1**	0	1	0	0	1	0	0	1	**1**	0	
1	**1**	1	1	1	0	1	0	1	**1**	**0**	**0**	
0	1	1	0	1	0	0	0	1	0	0	0	
0	0	1	0	1	1	0	1	1	0	0	1	
0	0	0	0	0	1	0	1	0	0	1	1	

Figure 41. Sensor Phasing Table

In this data sheet, the rotor position is always given in electrical degrees since the mechanical position is a function of the number of rotating magnetic poles. The relationship between the electrical and mechanical position is:

$$\text{Electrical Degrees} = \text{Mechanical Degrees}\left(\frac{\#\text{Rotor Poles}}{2}\right)$$

An increase in the number of magnetic poles causes more electrical revolutions for a given mechanical revolution. General purpose three phase motors typically contain a four pole rotor which yields two electrical revolutions for one mechanical.

Two and Four Phase Motor Commutation

The MC33035 is also capable of providing a four step output that can be used to drive two or four phase motors. The truth table in Figure 42 shows that by connecting sensor inputs S_B and S_C together, it is possible to truncate the number of drive output states from six to four. The output power switches are connected to B_T, C_T, B_B, and C_B. Figure 43 shows a four phase, four step, full wave motor control application. Power switch transistors Q_1 through Q_8 are Darlington type, each with an internal parasitic catch diode. With four step drive, only two rotor position sensors spaced at 90 electrical degrees are required. The commutation waveforms are shown in Figure 44.

Figure 45 shows a four phase, four step, half wave motor controller. It has the same features as the circuit in Figure 38, except for the deletion of speed control and braking.

MC33035 (60°/$\overline{120°}$ Select Pin Open)						
Inputs			Outputs			
Sensor Electrical Spacing* = 90°			Top Drives		Bottom Drives	
S_A	S_B	F/R	B_T	C_T	B_B	C_B
1	0	1	1	1	0	1
1	1	1	0	1	0	0
0	1	1	1	0	0	0
0	0	1	1	1	1	0
1	0	0	1	0	0	0
1	1	0	1	1	1	0
0	1	0	1	1	0	1
0	0	0	0	1	0	0

*With MC33035 sensor input S_B connected to S_C.

Figure 42. Two and Four Phase, Four Step, Commutation Truth Table

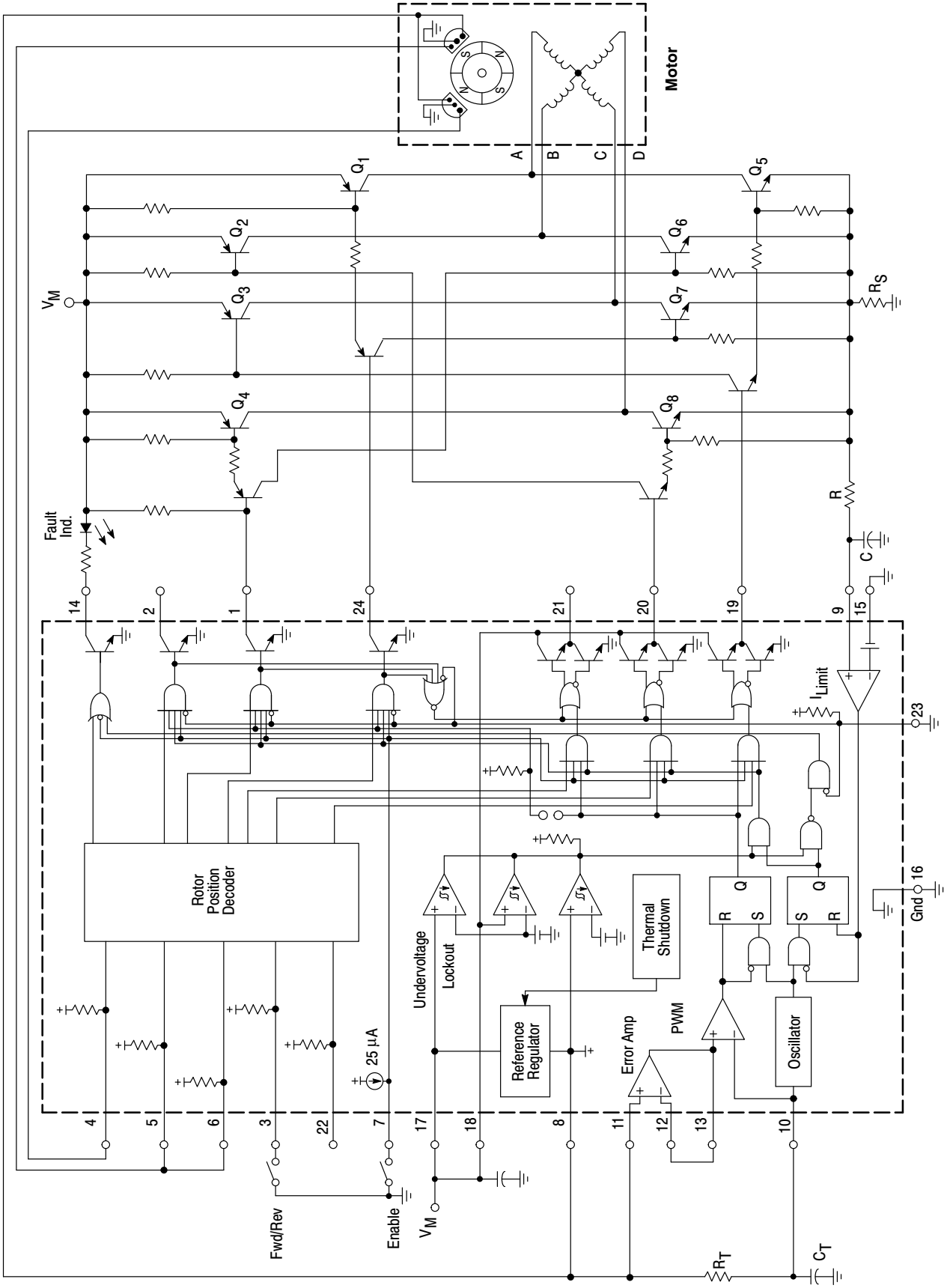

Figure 43. Four Phase, Four Step, Full Wave Motor Controller

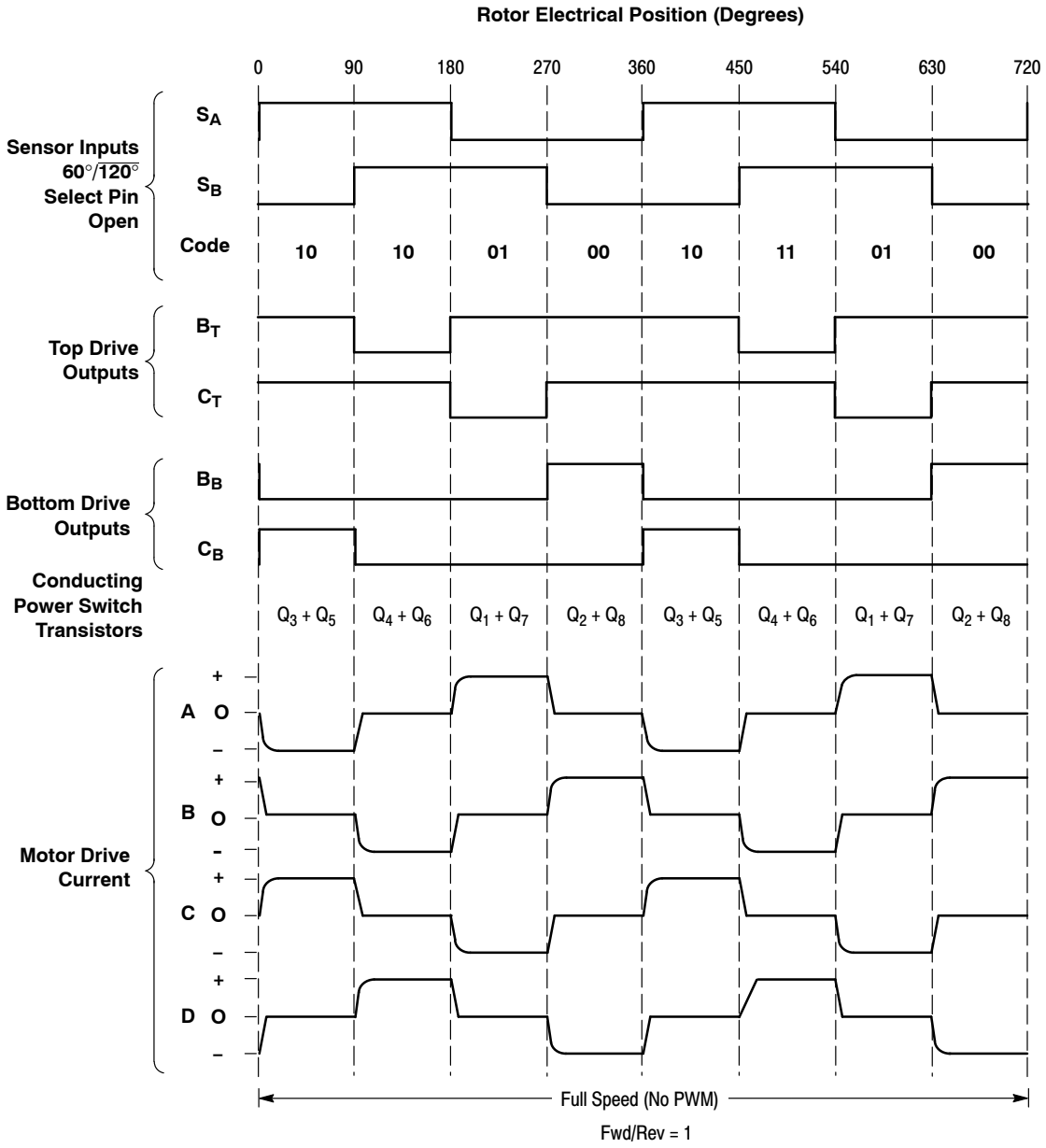

Figure 44. Four Phase, Four Step, Full Wave Motor Controller

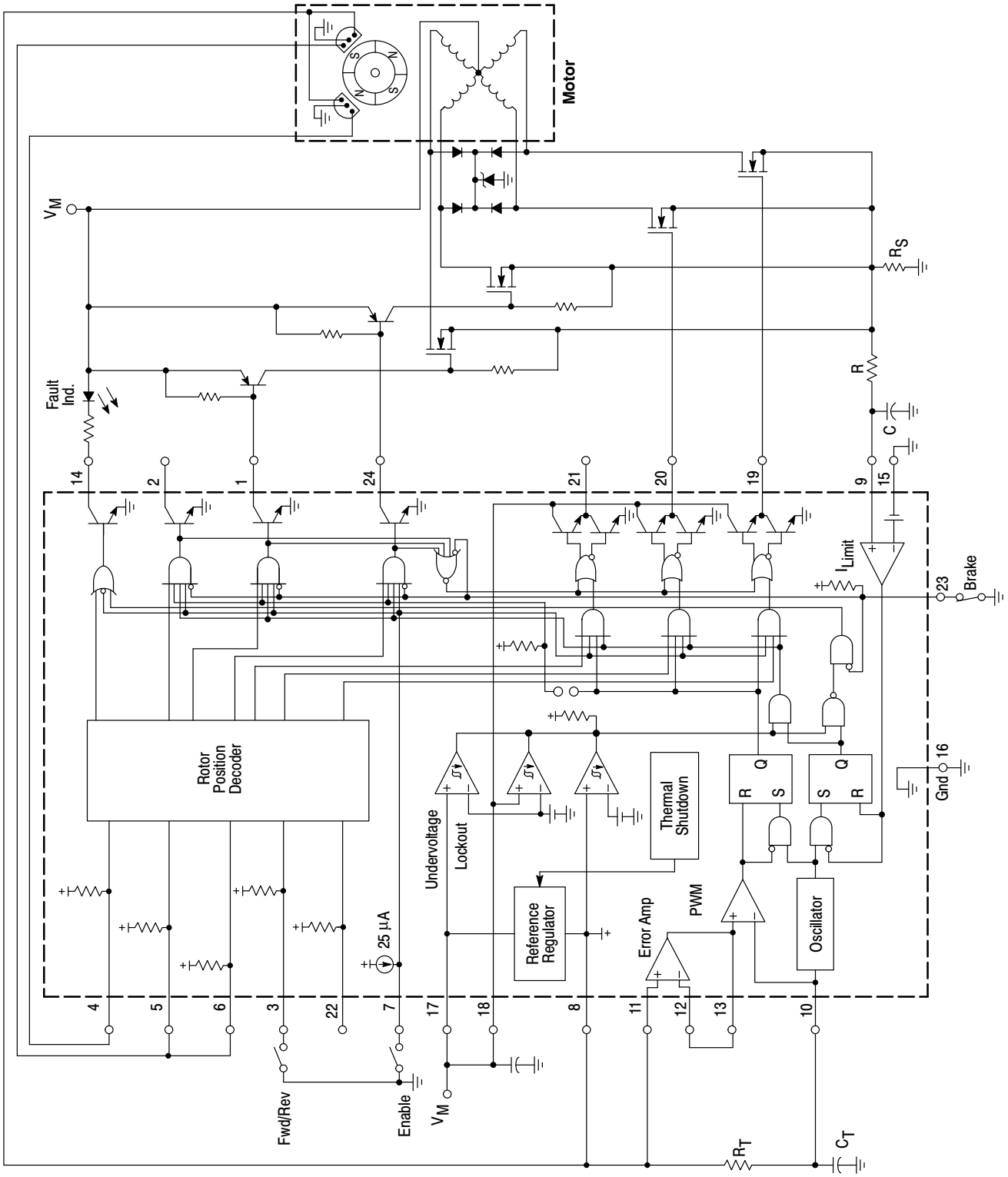

Figure 45. Four Phase, Four Step, Half Wave Motor Controller

Brush Motor Control

Though the MC33035 was designed to control brushless DC motors, it may also be used to control DC brush type motors. Figure 46 shows an application of the MC33035 driving a MOSFET H−bridge affording minimal parts count to operate a brush−type motor. Key to the operation is the input sensor code [100] which produces a top−left (Q_1) and a bottom−right (Q_3) drive when the controller's forward/reverse pin is at logic [1]; top−right (Q_4), bottom−left (Q_2) drive is realized when the Forward/Reverse pin is at logic [0]. This code supports the requirements necessary for H−bridge drive accomplishing both direction and speed control.

The controller functions in a normal manner with a pulse width modulated frequency of approximately 25 kHz. Motor speed is controlled by adjusting the voltage presented to the noninverting input of the error amplifier establishing the PWM's slice or reference level. Cycle−by−cycle current limiting of the motor current is accomplished by sensing the voltage (100 mV) across the R_S resistor to ground of the H−bridge motor current. The over current sense circuit makes it possible to reverse the direction of the motor, using the normal forward/reverse switch, on the fly and not have to completely stop before reversing.

LAYOUT CONSIDERATIONS

Do not attempt to construct any of the brushless motor control circuits on wire−wrap or plug−in prototype boards. High frequency printed circuit layout techniques are imperative to prevent pulse jitter. This is usually caused by excessive noise pick−up imposed on the current sense or error amp inputs. The printed circuit layout should contain a ground plane with low current signal and high drive and output buffer grounds returning on separate paths back to the power supply input filter capacitor V_M. Ceramic bypass capacitors (0.1 μF) connected close to the integrated circuit at V_{CC}, V_C, V_{ref} and the error amp noninverting input may be required depending upon circuit layout. This provides a low impedance path for filtering any high frequency noise. All high current loops should be kept as short as possible using heavy copper runs to minimize radiated EMI.

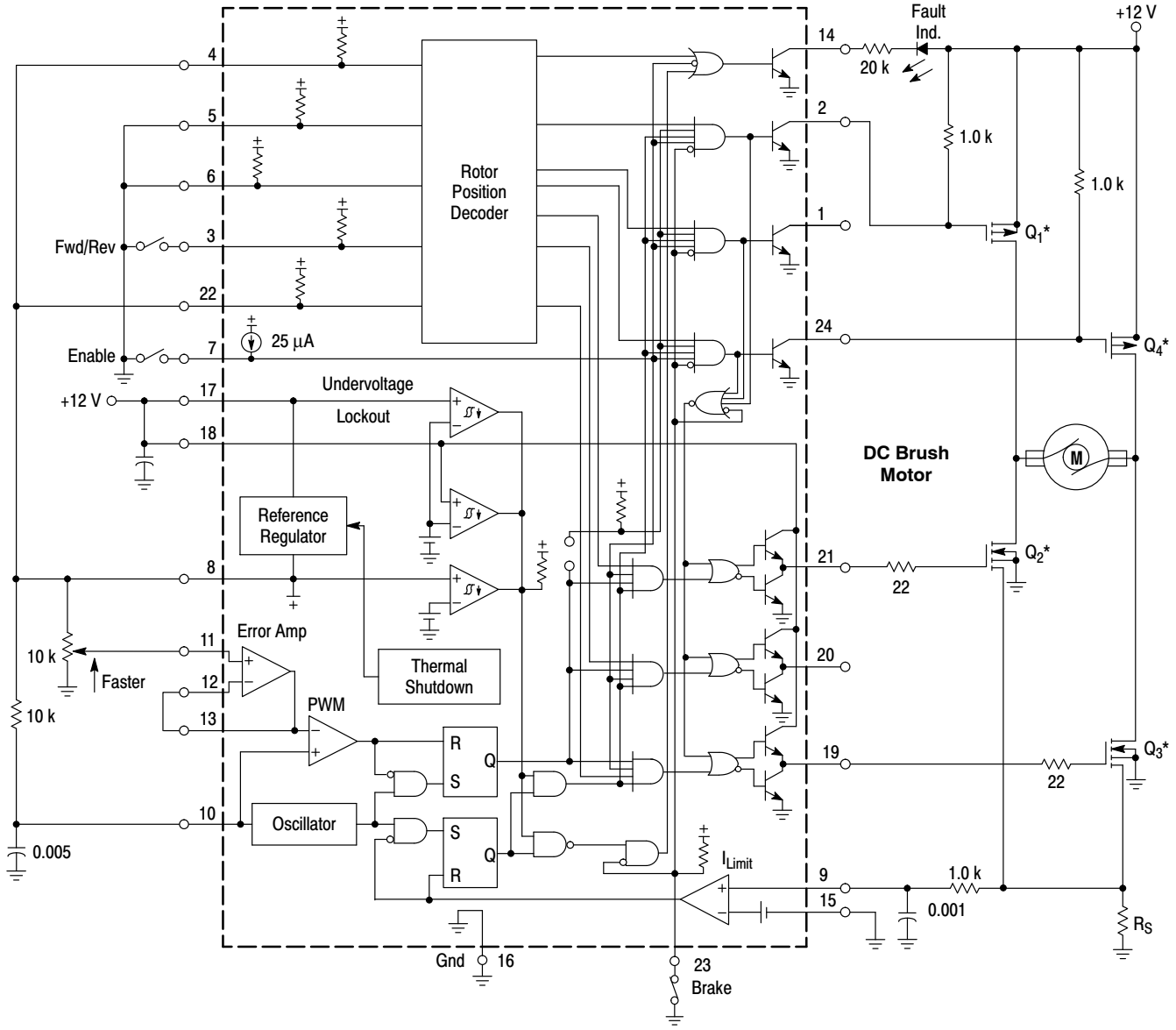

Figure 46. H−Bridge Brush−Type Controller

ORDERING INFORMATION

Device	Operating Temperature Range	Package	Shipping†
MC33035DWG	T_A = −40°C to +85°C	SOIC−24 WB (Pb−Free)	30 Units / Rail
MC33035DWR2G		SOIC−24 WB (Pb−Free)	1000 Tape & Reel
MC33035PG		PDIP−24 (Pb−Free)	15 Units / Tube
NCV33035DWR2*	T_A = −40°C to +125°C	SOIC−24 WB	1000 Tape & Reel
NCV33035DWR2G*		SOIC−24 WB (Pb−Free)	1000 Tape & Reel

†For information on tape and reel specifications, including part orientation and tape sizes, please refer to our Tape and Reel Packaging Specification Brochure, BRD8011/D.

*NCV33035: T_{low} = −40C, T_{high} = +125C. Guaranteed by design. NCV prefix for automotive and other applications requiring unique site and control change requirements; AEC−Q100 Qualified and PPAP Capable.

MARKING DIAGRAMS

SO−24
DW SUFFIX
CASE 751E

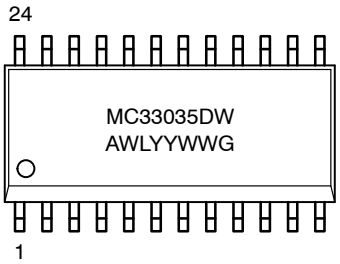

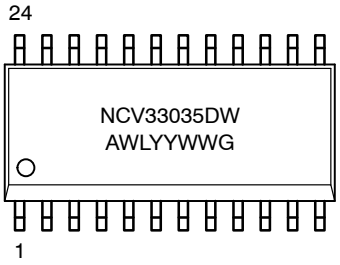

PDIP−24
P SUFFIX
CASE 724



A	= Assembly Location
WL	= Wafer Lot
YY	= Year
WW	= Work Week
G	= Pb−Free Package

MECHANICAL CASE OUTLINE
PACKAGE DIMENSIONS

SOIC−24 WB
CASE 751E−04
ISSUE F

DATE 03 JUL 2012

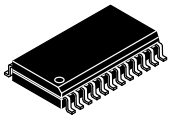

SCALE 1:1

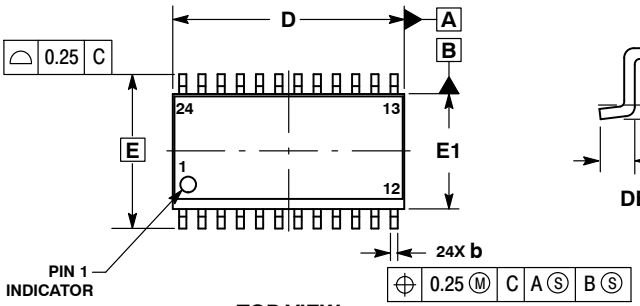

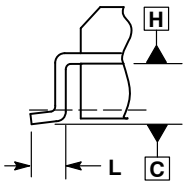

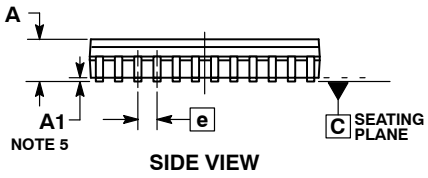

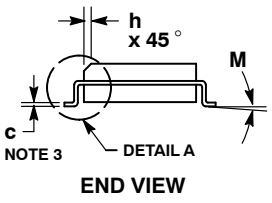

NOTES:
1. DIMENSIONING AND TOLERANCING PER ASME Y14.5M, 1994.
2. CONTROLLING DIMENSION: MILLIMETERS.
3. DIMENSIONS b AND c APPLY TO THE FLAT SECTION OF THE LEAD AND ARE MEASURED BETWEEN 0.10 AND 0.25 FROM THE LEAD TIP.
4. DIMENSIONS D AND E1 DO NOT INCLUDE MOLD FLASH, PROTRUSIONS OR GATE BURRS. MOLD FLASH, PROTRUSIONS OR GATE BURRS SHALL NOT EXCEED 0.15 mm PER SIDE. INTERLEAD FLASH OR PROTRUSION SHALL NOT EXCEED 0.25 PER SIDE. DIMENSIONS D AND E1 ARE DETERMINED AT DATUM H.
5. A1 IS DEFINED AS THE VERTICAL DISTANCE FROM THE SEATING PLANE TO THE LOWEST POINT ON THE PACKAGE BODY.

	MILLIMETERS	
DIM	MIN	MAX
A	2.35	2.65
A1	0.13	0.29
b	0.35	0.49
c	0.23	0.32
D	15.25	15.54
E	10.30 BSC	
E1	7.40	7.60
e	1.27 BSC	
h	0.25	0.75
L	0.41	0.90
M	0 °	8 °

RECOMMENDED SOLDERING FOOTPRINT*

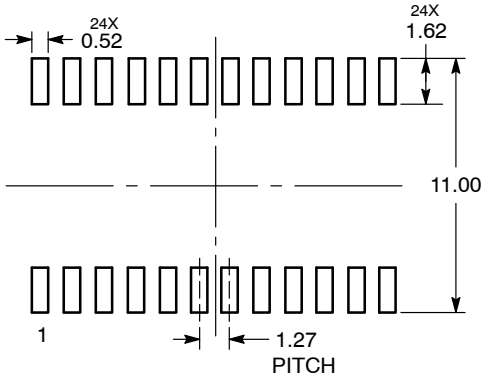

DIMENSIONS: MILLIMETERS

*For additional information on our Pb−Free strategy and soldering details, please download the ON Semiconductor Soldering and Mounting Techniques Reference Manual, SOLDERRM/D.

GENERIC MARKING DIAGRAM*

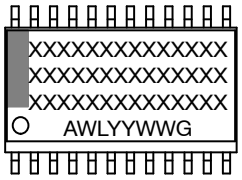

XXXXX = Specific Device Code
A = Assembly Location
WL = Wafer Lot
YY = Year
WW = Work Week
G = Pb−Free Package

*This information is generic. Please refer to device data sheet for actual part marking. Pb−Free indicator, “G” or microdot “▪”, may or may not be present. Some products may not follow the Generic Marking.

DOCUMENT NUMBER:	**98ASB42344B**	Electronic versions are uncontrolled except when accessed directly from the Document Repository. Printed versions are uncontrolled except when stamped “CONTROLLED COPY” in red.	
DESCRIPTION:	**SOIC−24 WB**		**PAGE 1 OF 1**

onsemi and ONSEMI. are trademarks of Semiconductor Components Industries, LLC dba **onsemi** or its subsidiaries in the United States and/or other countries. **onsemi** reserves the right to make changes without further notice to any products herein. **onsemi** makes no warranty, representation or guarantee regarding the suitability of its products for any particular purpose, nor does **onsemi** assume any liability arising out of the application or use of any product or circuit, and specifically disclaims any and all liability, including without limitation special, consequential or incidental damages. **onsemi** does not convey any license under its patent rights nor the rights of others.

© Semiconductor Components Industries, LLC, 2019

PDIP
CASE 724–03
ISSUE D

DATE 07/15/1987

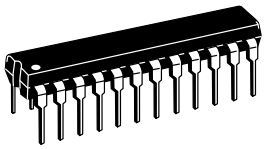

SCALE 1:1

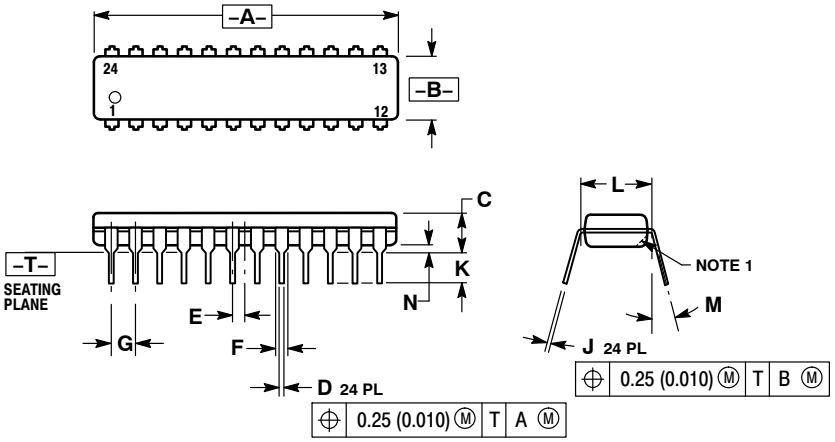

NOTES:
1. CHAMFERED CONTOUR OPTIONAL.
2. DIMENSION L TO CENTER OF LEADS WHEN FORMED PARALLEL.
3. DIMENSIONING AND TOLERANCING PER ANSI Y14.5M, 1982.
4. CONTROLLING DIMENSION: INCH.

	INCHES		MILLIMETERS	
DIM	MIN	MAX	MIN	MAX
A	1.230	1.265	31.25	32.13
B	0.250	0.270	6.35	6.85
C	0.145	0.175	3.69	4.44
D	0.015	0.020	0.38	0.51
E	0.050 BSC		1.27 BSC	
F	0.040	0.060	1.02	1.52
G	0.100 BSC		2.54 BSC	
J	0.007	0.012	0.18	0.30
K	0.110	0.140	2.80	3.55
L	0.300 BSC		7.62 BSC	
M	0°	15°	0°	15°
N	0.020	0.040	0.51	1.01

ON Semiconductor and ON are trademarks of Semiconductor Components Industries, LLC dba ON Semiconductor or its subsidiaries in the United States and/or other countries. ON Semiconductor reserves the right to make changes without further notice to any products herein. ON Semiconductor makes no warranty, representation or guarantee regarding the suitability of its products for any particular purpose, nor does ON Semiconductor assume any liability arising out of the application or use of any product or circuit, and specifically disclaims any and all liability, including without limitation special, consequential or incidental damages. ON Semiconductor does not convey any license under its patent rights nor the rights of others.

© Semiconductor Components Industries, LLC, 2019

onsemi, , and other names, marks, and brands are registered and/or common law trademarks of Semiconductor Components Industries, LLC dba "**onsemi**" or its affiliates and/or subsidiaries in the United States and/or other countries. **onsemi** owns the rights to a number of patents, trademarks, copyrights, trade secrets, and other intellectual property. A listing of **onsemi**'s product/patent coverage may be accessed at www.onsemi.com/site/pdf/Patent−Marking.pdf. **onsemi** reserves the right to make changes at any time to any products or information herein, without notice. The information herein is provided "as−is" and **onsemi** makes no warranty, representation or guarantee regarding the accuracy of the information, product features, availability, functionality, or suitability of its products for any particular purpose, nor does **onsemi** assume any liability arising out of the application or use of any product or circuit, and specifically disclaims any and all liability, including without limitation special, consequential or incidental damages. Buyer is responsible for its products and applications using **onsemi** products, including compliance with all laws, regulations and safety requirements or standards, regardless of any support or applications information provided by **onsemi**. "Typical" parameters which may be provided in **onsemi** data sheets and/or specifications can and do vary in different applications and actual performance may vary over time. All operating parameters, including "Typicals" must be validated for each customer application by customer's technical experts. **onsemi** does not convey any license under any of its intellectual property rights nor the rights of others. **onsemi** products are not designed, intended, or authorized for use as a critical component in life support systems or any FDA Class 3 medical devices or medical devices with a same or similar classification in a foreign jurisdiction or any devices intended for implantation in the human body. Should Buyer purchase or use **onsemi** products for any such unintended or unauthorized application, Buyer shall indemnify and hold **onsemi** and its officers, employees, subsidiaries, affiliates, and distributors harmless against all claims, costs, damages, and expenses, and reasonable attorney fees arising out of, directly or indirectly, any claim of personal injury or death associated with such unintended or unauthorized use, even if such claim alleges that **onsemi** was negligent regarding the design or manufacture of the part. **onsemi** is an Equal Opportunity/Affirmative Action Employer. This literature is subject to all applicable copyright laws and is not for resale in any manner.

ADDITIONAL INFORMATION

TECHNICAL PUBLICATIONS:
Technical Library: www.onsemi.com/design/resources/technical−documentation
onsemi Website: www.onsemi.com

ONLINE SUPPORT: www.onsemi.com/support
For additional information, please contact your local Sales Representative at www.onsemi.com/support/sales