Inverting Switching Regulators - Step-Up/Down

5.0 A

MC34167, MC33167

The MC34167, MC33167 series are high performance fixed frequency power switching regulators that contain the primary functions required for dc−to−dc converters. This series was specifically designed to be incorporated in step−down and voltage−inverting configurations with a minimum number of external components and can also be used cost effectively in step−up applications.

These devices consist of an internal temperature compensated reference, fixed frequency oscillator with on−chip timing components, latching pulse width modulator for single pulse metering, high gain error amplifier, and a high current output switch.

Protective features consist of cycle−by−cycle current limiting, undervoltage lockout, and thermal shutdown. Also included is a low power standby mode that reduces power supply current to 36 μA.

Features

- Output Switch Current in Excess of 5.0 A
- Fixed Frequency Oscillator (72 kHz) with On−Chip Timing
- Provides 5.05 V Output without External Resistor Divider
- Precision 2% Reference
- 0% to 95% Output Duty Cycle
- Cycle−by−Cycle Current Limiting
- Undervoltage Lockout with Hysteresis
- Internal Thermal Shutdown
- Operation from 7.5 V to 40 V
- Standby Mode Reduces Power Supply Current to 36 μA
- Economical 5−Lead TO−220 Package with Two Optional Leadforms
- Also Available in Surface Mount D^{2}PAK Package
- Moisture Sensitivity Level (MSL) Equals 1
- Pb−Free Packages are Available

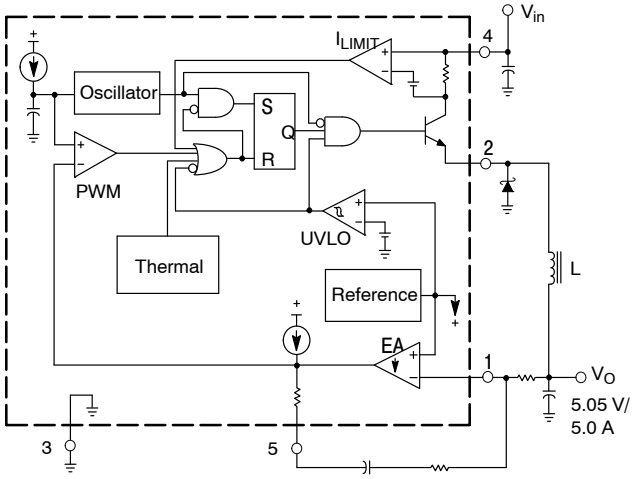

This device contains 143 active transistors.

Figure 1. Simplified Block Diagram
(Step Down Application)

MARKING DIAGRAMS

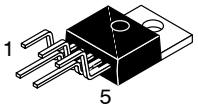

TO−220
TV SUFFIX
CASE 314B

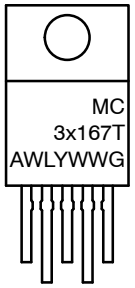

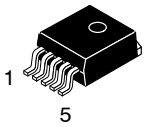

D^{2}PAK
D2T SUFFIX
CASE 936A

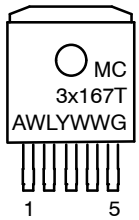

Heatsink surface (shown as terminal 6 in case outline drawing) is connected to Pin 3

x = 3 or 4
A = Assembly Location
WL = Wafer Lot
Y = Year
WW = Work Week
G = Pb−Free Package

ORDERING INFORMATION

See detailed ordering and shipping information in the package dimensions section on page 17 of this data sheet.

NOTE: Some of the devices on this data sheet have been **DISCONTINUED**. Please refer to the table on page 17.

© Semiconductor Components Industries, LLC, 2005

MAXIMUM RATINGS (Note 1 and 2)

Rating	Symbol	Value	Unit
Power Supply Input Voltage	V_{CC}	40	V
Switch Output Voltage Range	$V_{O(switch)}$	−2.0 to + V_{in}	V
Voltage Feedback and Compensation Input Voltage Range	V_{FB}, V_{Comp}	−1.0 to + 7.0	V
Power Dissipation			
Case 314A, 314B and 314D (T_A = +25°C)	P_D	Internally Limited	W
Thermal Resistance, Junction−to−Ambient	θ_{JA}	65	°C/W
Thermal Resistance, Junction−to−Case	θ_{JC}	5.0	°C/W
Case 936A (D^2PAK) (T_A = +25°C)	P_D	Internally Limited	W
Thermal Resistance, Junction−to−Ambient	θ_{JA}	70	°C/W
Thermal Resistance, Junction−to−Case	θ_{JC}	5.0	°C/W
Operating Junction Temperature	T_J	+150	°C
Operating Ambient Temperature (Note 3) MC34167 MC33167	T_A	 0 to + 70 − 40 to + 85	°C
Storage Temperature Range	T_{stg}	− 65 to +150	°C

Stresses exceeding those listed in the Maximum Ratings table may damage the device. If any of these limits are exceeded, device functionality should not be assumed, damage may occur and reliability may be affected.

1. Maximum package power dissipation limits must be observed to prevent thermal shutdown activation.
2. This device series contains ESD protection and exceeds the following tests:
   Human Body Model 2000 V per MIL−STD−883, Method 3015.
   Machine Model Method 200 V.
3. T_{low} = 0°C for MC34167 = − 40°C for MC33167 T_{high} = + 70°C for MC34167 = + 85°C for MC33167

ELECTRICAL CHARACTERISTICS (V_{CC} = 12 V, for typical values T_A = +25°C, for min/max values T_A is the operating ambient temperature range that applies (Notes 4, 5), unless otherwise noted.)

Characteristic		Symbol	Min	Typ	Max	Unit
OSCILLATOR						
Frequency (V_{CC} = 7.5 V to 40 V)	T_A = +25°C T_A = T_{low} to T_{high}	f_{OSC}	65 62	72 –	79 81	kHz
ERROR AMPLIFIER						
Voltage Feedback Input Threshold	T_A =+ 25°C T_A = T_{low} to T_{high}	$V_{FB(th)}$	4.95 4.85	5.05 –	5.15 5.20	V
Line Regulation (V_{CC} = 7.5 V to 40 V, T_A = +25°C)		Reg_{line}	–	0.03	0.078	%/V
Input Bias Current (V_{FB} = $V_{FB(th)}$ + 0.15 V)		I_{IB}	–	0.15	1.0	μA
Power Supply Rejection Ratio (V_{CC} = 10 V to 20 V, f = 120 Hz)		PSRR	60	80	–	dB
Output Voltage Swing	High State (I_{Source} = 75 μA, V_{FB} = 4.5 V) Low State (I_{Sink} = 0.4 mA, V_{FB} = 5.5 V)	V_{OH} V_{OL}	4.2 –	4.9 1.6	– 1.9	V
PWM COMPARATOR						
Duty Cycle (V_{CC} = 20 V)	Maximum (V_{FB} = 0 V) Minimum (V_{Comp} = 1.9 V)	$DC_{(max)}$ $DC_{(min)}$	92 0	95 0	100 0	%
SWITCH OUTPUT						
Output Voltage Source Saturation (V_{CC} = 7.5 V, I_{Source} = 5.0 A)		V_{sat}	–	(V_{CC} –1.5)	(V_{CC} –1.8)	V
Off–State Leakage (V_{CC} = 40 V, Pin 2 = GND)		$I_{sw(off)}$	–	0	100	μA
Current Limit Threshold (V_{CC} = 7.5 V)		$I_{pk(switch)}$	5.5	6.5	8.0	A
Switching Times (V_{CC} = 40 V, I_{pk} = 5.0 A, L = 225 μH, T_A = +25°C) Output Voltage Rise Time Output Voltage Fall Time		 t_r t_f	 – –	 100 50	 200 100	ns
UNDERVOLTAGE LOCKOUT						
Startup Threshold (V_{CC} Increasing, T_A = +25°C)		$V_{th(UVLO)}$	5.5	5.9	6.3	V
Hysteresis (V_{CC} Decreasing, T_A = +25°C)		$V_{H(UVLO)}$	0.6	0.9	1.2	V
TOTAL DEVICE						
Power Supply Current (T_A = +25°C) Standby (V_{CC} = 12 V, V_{Comp} < 0.15 V) Operating (V_{CC} = 40 V, Pin 1 = GND for maximum duty cycle)		I_{CC}	 – –	 36 40	 100 60	 μA mA

4. Low duty cycle pulse techniques are used during test to maintain junction temperature as close to ambient as possible.
5. T_{low} = 0°C for MC34167 = – 40°C for MC33167 T_{high} = + 70°C for MC34167 = + 85°C for MC33167

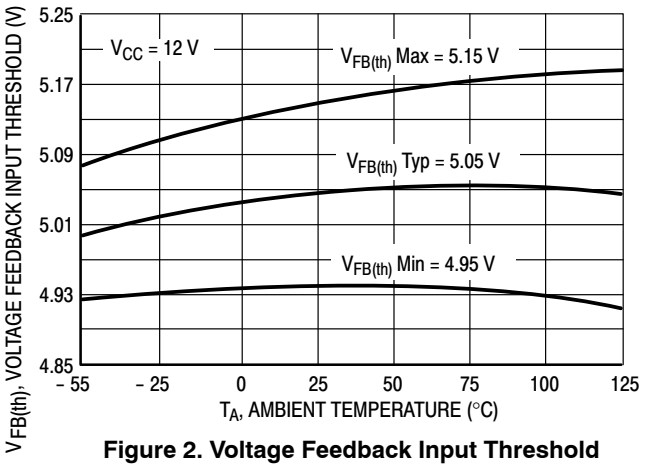

Figure 2. Voltage Feedback Input Threshold versus Temperature

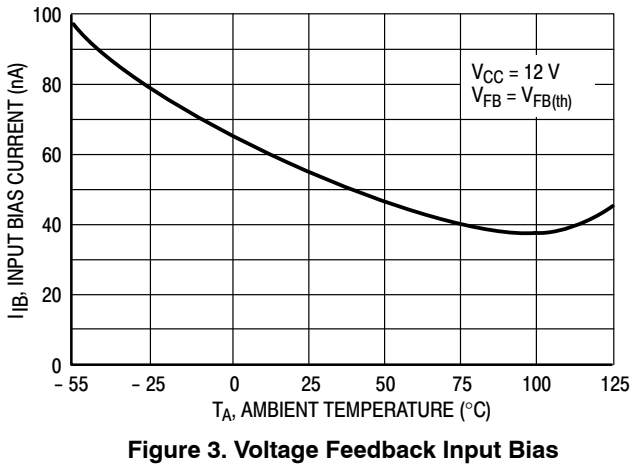

Figure 3. Voltage Feedback Input Bias Current versus Temperature

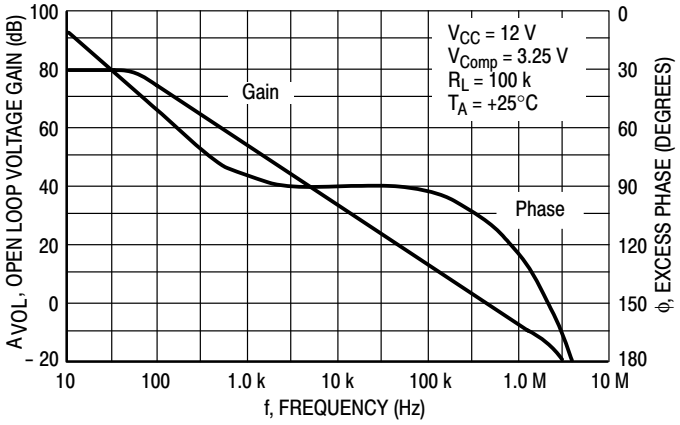

Figure 4. Error Amp Open Loop Gain and Phase versus Frequency

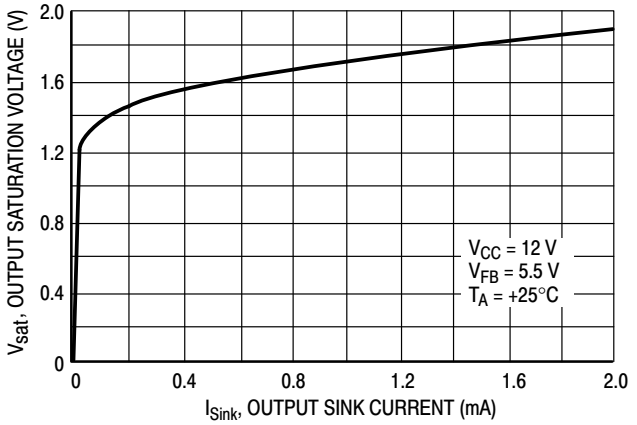

Figure 5. Error Amp Output Saturation versus Sink Current

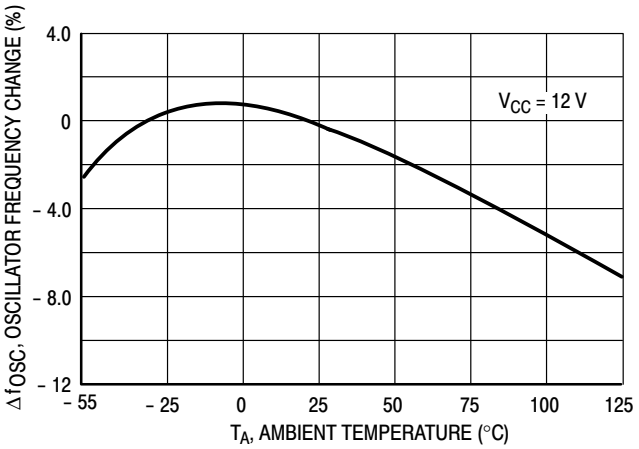

Figure 6. Oscillator Frequency Change versus Temperature

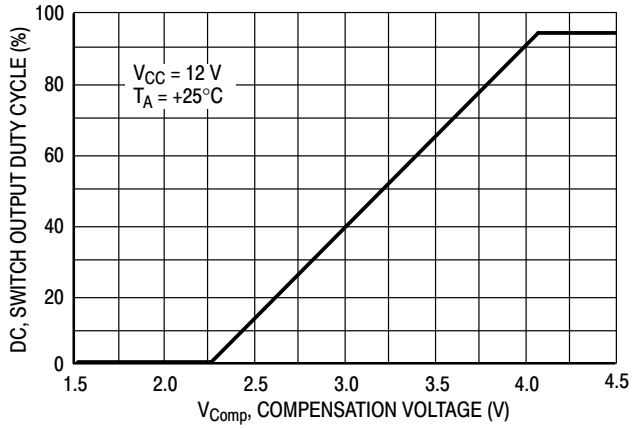

Figure 7. Switch Output Duty Cycle versus Compensation Voltage

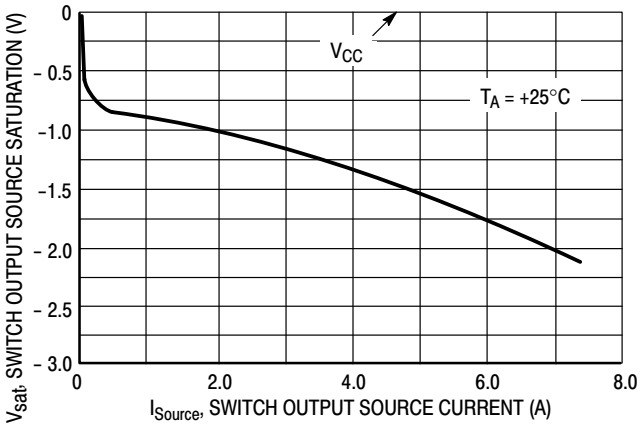

Figure 8. Switch Output Source Saturation versus Source Current

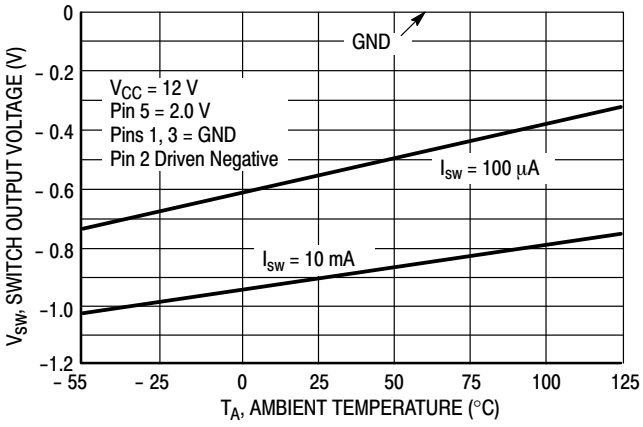

Figure 9. Negative Switch Output Voltage versus Temperature

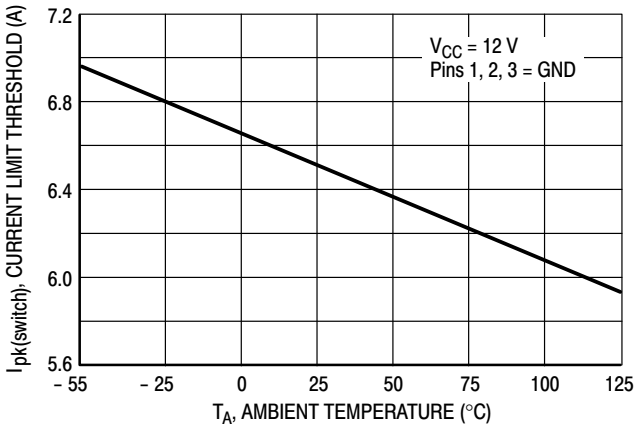

Figure 10. Switch Output Current Limit Threshold versus Temperature

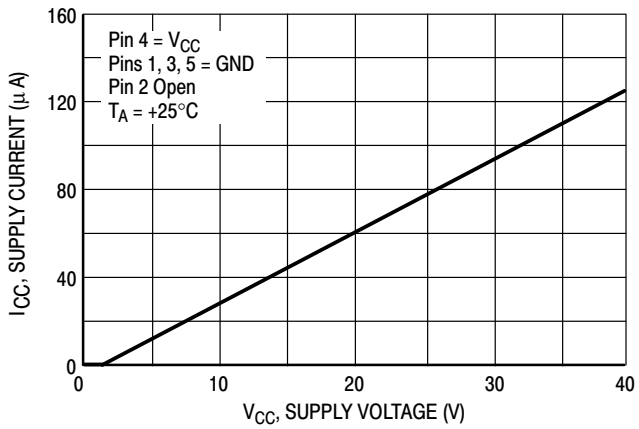

Figure 11. Standby Supply Current versus Supply Voltage

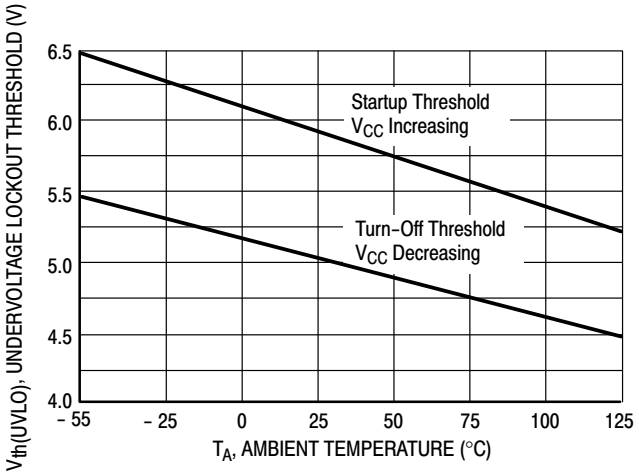

Figure 12. Undervoltage Lockout Thresholds versus Temperature

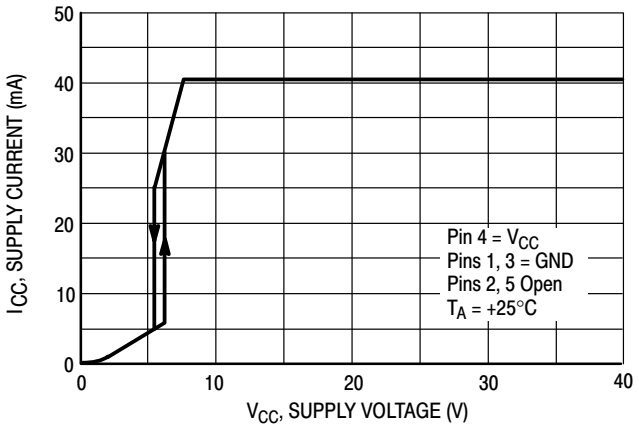

Figure 13. Operating Supply Current versus Supply Voltage

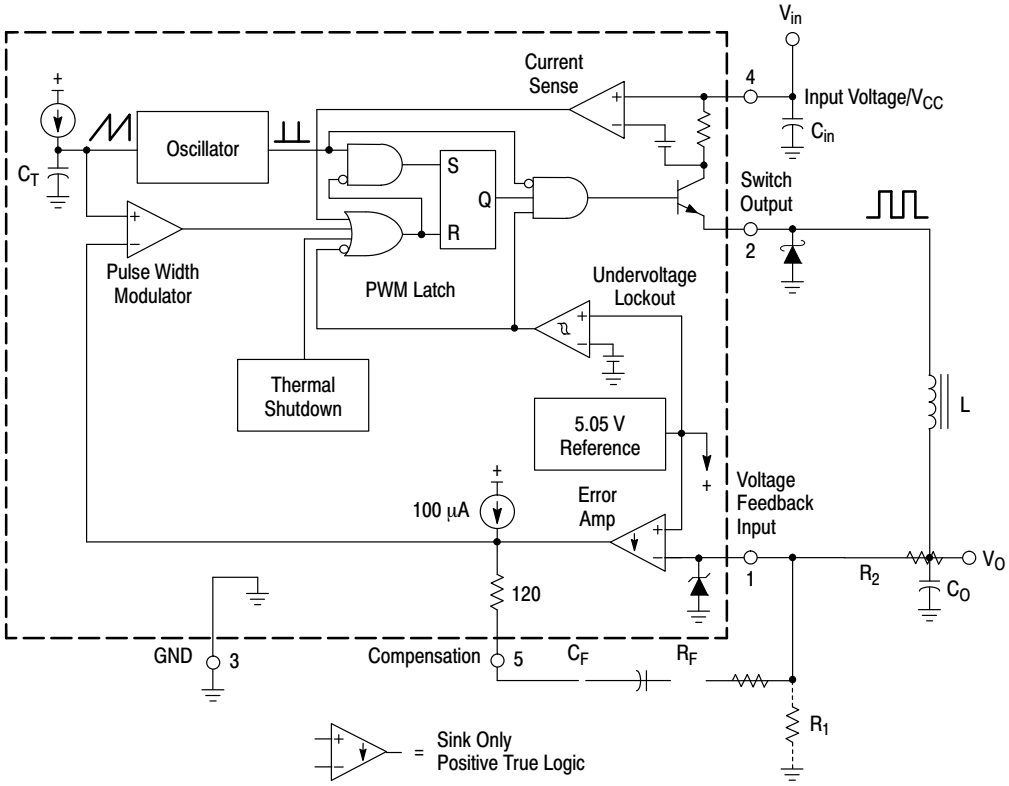

Figure 14. MC34167 Representative Block Diagram

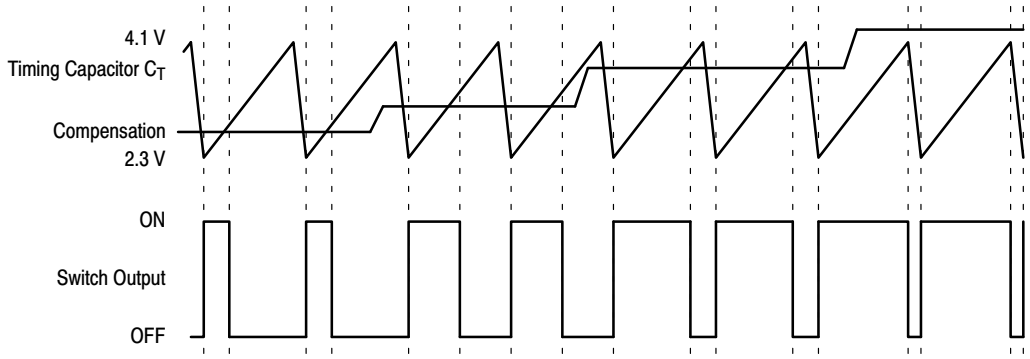

Figure 15. Timing Diagram

INTRODUCTION

The MC34167, MC33167 series are monolithic power switching regulators that are optimized for dc−to−dc converter applications. These devices operate as fixed frequency, voltage mode regulators containing all the active functions required to directly implement step−down and voltage−inverting converters with a minimum number of external components. They can also be used cost effectively in step−up converter applications. Potential markets include automotive, computer, industrial, and cost sensitive consumer products. A description of each section of the device is given below with the representative block diagram shown in Figure 14.

Oscillator

The oscillator frequency is internally programmed to 72 kHz by capacitor C_T and a trimmed current source. The charge to discharge ratio is controlled to yield a 95% maximum duty cycle at the Switch Output. During the discharge of C_T, the oscillator generates an internal blanking pulse that holds the inverting input of the AND gate high, disabling the output switch transistor. The nominal oscillator peak and valley thresholds are 4.1 V and 2.3 V respectively.

Pulse Width Modulator

The Pulse Width Modulator consists of a comparator with the oscillator ramp voltage applied to the noninverting input, while the error amplifier output is applied into the inverting input. Output switch conduction is initiated when C_T is discharged to the oscillator valley voltage. As C_T charges to a voltage that exceeds the error amplifier output, the latch resets, terminating output transistor conduction for the duration of the oscillator ramp−up period. This PWM/Latch combination prevents multiple output pulses during a given oscillator clock cycle. Figures 7 and 15 illustrate the switch output duty cycle versus the compensation voltage.

Current Sense

The MC34167 series utilizes cycle−by−cycle current limiting as a means of protecting the output switch transistor from overstress. Each on cycle is treated as a separate situation. Current limiting is implemented by monitoring the output switch transistor current buildup during conduction, and upon sensing an overcurrent condition, immediately turning off the switch for the duration of the oscillator ramp−up period.

The collector current is converted to a voltage by an internal trimmed resistor and compared against a reference by the Current Sense comparator. When the current limit threshold is reached, the comparator resets the PWM latch. The current limit threshold is typically set at 6.5 A. Figure 10 illustrates switch output current limit threshold versus temperature.

Error Amplifier and Reference

A high gain Error Amplifier is provided with access to the inverting input and output. This amplifier features a typical dc voltage gain of 80 dB, and a unity gain bandwidth of 600 kHz with 70 degrees of phase margin (Figure 4). The noninverting input is biased to the internal 5.05 V reference and is not pinned out. The reference has an accuracy of ± 2.0% at room temperature. To provide 5.0 V at the load, the reference is programmed 50 mV above 5.0 V to compensate for a 1.0% voltage drop in the cable and connector from the converter output. If the converter design requires an output voltage greater than 5.05 V, resistor R_1 must be added to form a divider network at the feedback input as shown in Figures 14 and 19. The equation for determining the output voltage with the divider network is:

$$V_{out} = 5.05\left(\frac{R_2}{R_1} + 1\right)$$

External loop compensation is required for converter stability. A simple low−pass filter is formed by connecting a resistor (R_2) from the regulated output to the inverting input, and a series resistor−capacitor (R_F, C_F) between Pins 1 and 5. The compensation network component values shown in each of the applications circuits were selected to provide stability over the tested operating conditions. The step−down converter (Figure 19) is the easiest to compensate for stability. The step−up (Figure 21) and voltage−inverting (Figure 23) configurations operate as continuous conduction flyback converters, and are more difficult to compensate. The simplest way to optimize the compensation network is to observe the response of the output voltage to a step load change, while adjusting R_F and C_F for critical damping. The final circuit should be verified for stability under four boundary conditions. These conditions are minimum and maximum input voltages, with minimum and maximum loads.

By clamping the voltage on the error amplifier output (Pin 5) to less than 150 mV, the internal circuitry will be placed into a low power standby mode, reducing the power supply current to 36 μA with a 12 V supply voltage. Figure 11 illustrates the standby supply current versus supply voltage.

The Error Amplifier output has a 100 μA current source pull−up that can be used to implement soft−start. Figure 18 shows the current source charging capacitor C_{SS} through a series diode. The diode disconnects C_{SS} from the feedback loop when the 1.0 M resistor charges it above the operating range of Pin 5.

Switch Output

The output transistor is designed to switch a maximum of 40 V, with a minimum peak collector current of 5.5 A. When configured for step−down or voltage−inverting applications, as in Figures 19 and 23, the inductor will forward bias the output rectifier when the switch turns off. Rectifiers with a high forward voltage drop or long turn on delay time should not be used. If the emitter is allowed to go sufficiently negative, collector current will flow, causing additional device heating and reduced conversion efficiency. Figure 9 shows that by clamping the emitter to 0.5 V, the collector current will be in the range of 100 μA over temperature. A 1N5825 or equivalent Schottky barrier rectifier is recommended to fulfill these requirements.

Undervoltage Lockout

An Undervoltage Lockout comparator has been incorporated to guarantee that the integrated circuit is fully functional before the output stage is enabled. The internal reference voltage is monitored by the comparator which enables the output stage when V_{CC} exceeds 5.9 V. To prevent erratic output switching as the threshold is crossed, 0.9 V of hysteresis is provided.

Thermal Protection

Internal Thermal Shutdown circuitry is provided to protect the integrated circuit in the event that the maximum junction temperature is exceeded. When activated, typically at 170°C, the latch is forced into a ‘reset’ state, disabling the output switch. This feature is provided to prevent catastrophic failures from accidental device overheating. **It is not intended to be used as a substitute for proper heatsinking.** The MC34167 is contained in a 5−lead TO−220 type package. The tab of the package is common with the center pin (Pin 3) and is normally connected to ground.

DESIGN CONSIDERATIONS

Do not attempt to construct a converter on wire−wrap or plug−in prototype boards. Special care should be taken to separate ground paths from signal currents and ground paths from load currents. All high current loops should be kept as short as possible using heavy copper runs to minimize ringing and radiated EMI. For best operation, a tight component layout is recommended. Capacitors C_{in}, C_O, and all feedback components should be placed as close to the IC as physically possible. It is also imperative that the Schottky diode connected to the Switch Output be located as close to the IC as possible.

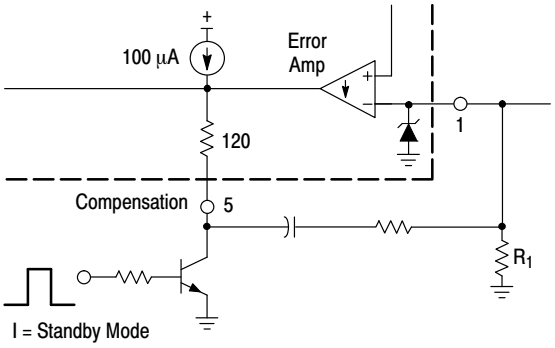

Figure 16. Low Power Standby Circuit

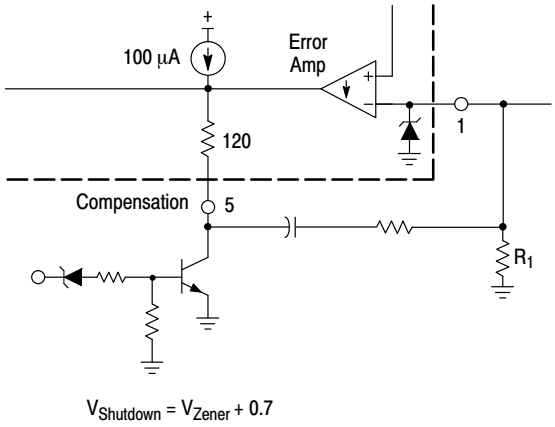

Figure 17. Over Voltage Shutdown Circuit

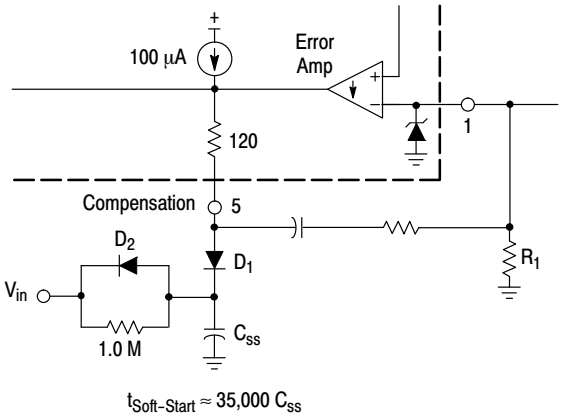

Figure 18. Soft−Start Circuit

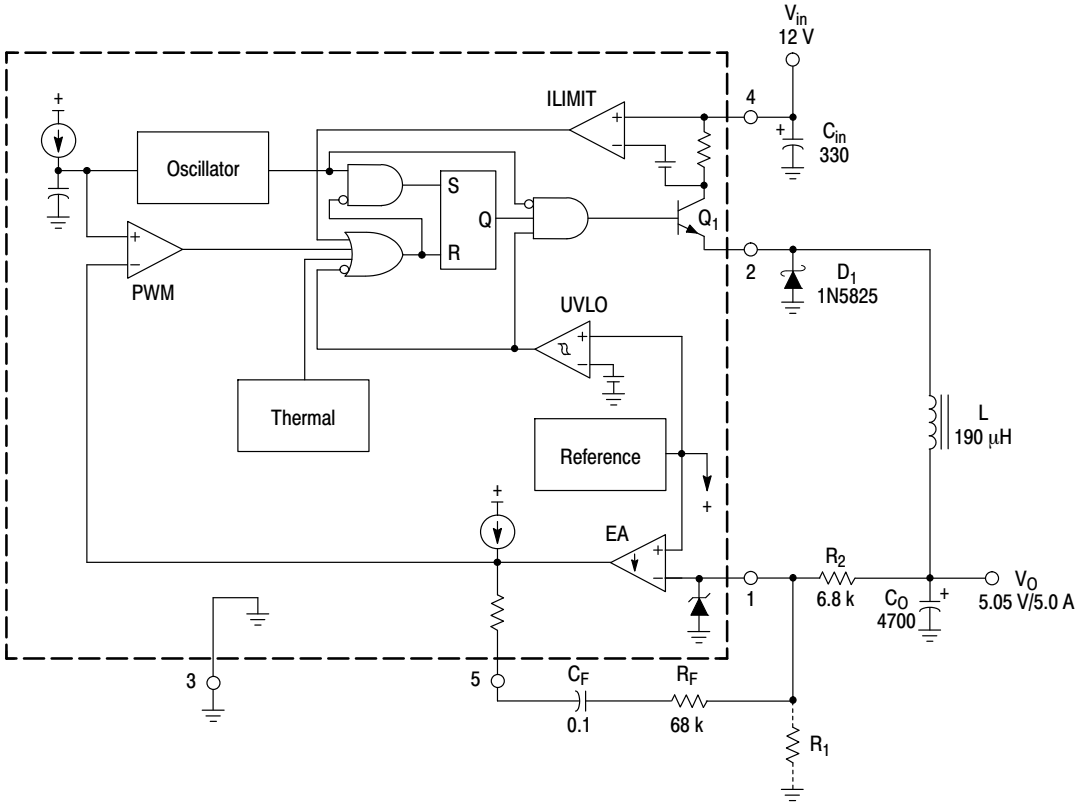

Test	Conditions	Results
Line Regulation	V_{in} = 10 V to 36 V, I_O = 5.0 A	4.0 mV = ± 0.039%
Load Regulation	V_{in} = 12 V, I_O = 0.25 A to 5.0 A	1.0 mV = ± 0.01%
Output Ripple	V_{in} = 12 V, I_O = 5.0 A	20 mV_{pp}
Short Circuit Current	V_{in} = 12 V, R_L = 0.1 Ω	6.5 A
Efficiency	V_{in} = 12 V, I_O = 5.0 A V_{in} = 24 V, I_O = 5.0 A	78.9% 82.6%

L = Coilcraft M1496−A or General Magnetics Technology GMT−0223, 42 turns of #16 AWG on Magnetics Inc. 58350−A2 core. Heatsink = AAVID Engineering Inc. 5903B, or 5930B.

The Step−Down Converter application is shown in Figure 19. The output switch transistor Q_1 interrupts the input voltage, generating a squarewave at the LC_O filter input. The filter averages the squarewaves, producing a dc output voltage that can be set to any level between V_{in} and V_{ref} by controlling the percent conduction time of Q_1 to that of the total oscillator cycle time. If the converter design requires an output voltage greater than 5.05 V, resistor R_1 must be added to form a divider network at the feedback input.

Figure 19. Step−Down Converter

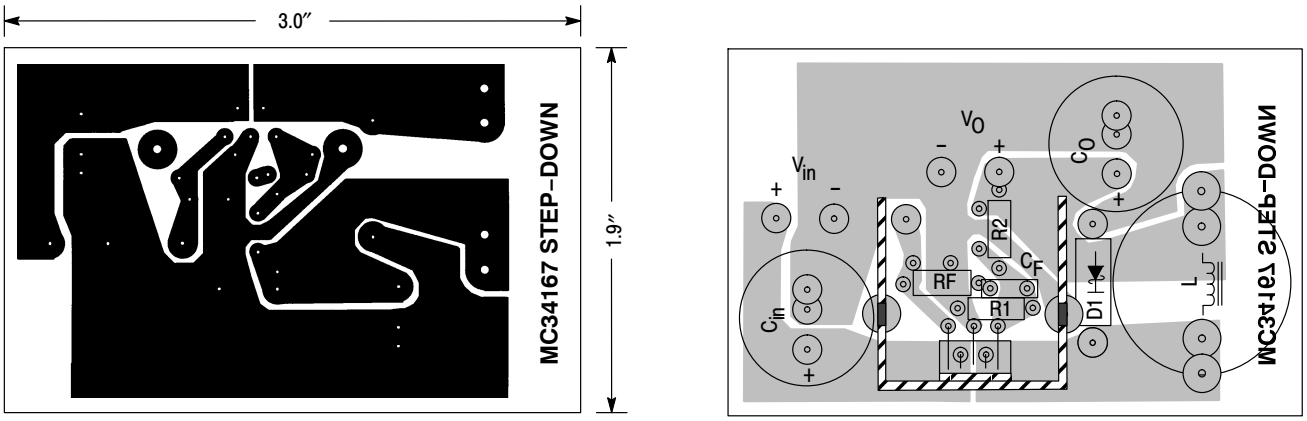

Figure 20. Step−Down Converter Printed Circuit Board and Component Layout

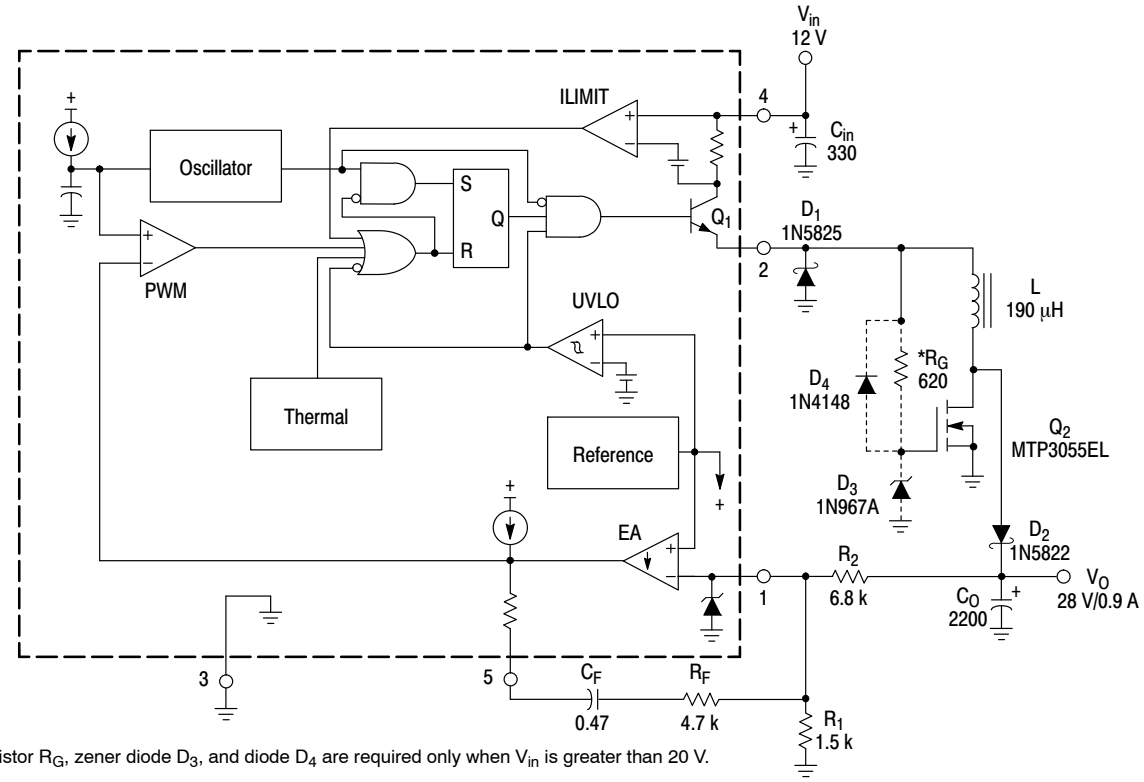

*Gate resistor R_G, zener diode D_3, and diode D_4 are required only when V_{in} is greater than 20 V.

Test	Conditions	Results
Line Regulation	V_{in} = 10 V to 24 V, I_O = 0.9 A	10 mV = ± 0.017%
Load Regulation	V_{in} = 12 V, I_O = 0.1 A to 0.9 A	30 mV = ± 0.053%
Output Ripple	V_{in} = 12 V, I_O = 0.9 A	140 mV_{pp}
Short Circuit Current	V_{in} = 12 V, R_L = 0.1 Ω	6.0 A
Efficiency	V_{in} = 12 V, I_O = 0.9 A V_{in} = 24 V, I_O = 0.9 A	80.1% 87.8%

L = Coilcraft M1496−A or General Magnetics Technology GMT−0223, 42 turns of #16 AWG on Magnetics Inc. 58350−A2 core.
Heatsink = AAVID Engineering Inc. MC34167: 5903B, or 5930B MTP3055EL: 5925B

Figure 21 shows that the MC34167 can be configured as a step−up/down converter with the addition of an external power MOSFET. Energy is stored in the inductor during the ON time of transistors Q_1 and Q_2. During the OFF time, the energy is transferred, with respect to ground, to the output filter capacitor and load. This circuit configuration has two significant advantages over the basic step−up converter circuit. The first advantage is that output short circuit protection is provided by the MC34167, since Q_1 is directly in series with V_{in} and the load. Second, the output voltage can be programmed to be less than V_{in}. Notice that during the OFF time, the inductor forward biases diodes D_1 and D_2, transferring its energy with respect to ground rather than with respect to V_{in}. When operating with V_{in} greater than 20 V, a gate protection network is required for the MOSFET. The network consists of components R_G, D_3, and D_4.

Figure 21. Step−Up/Down Converter

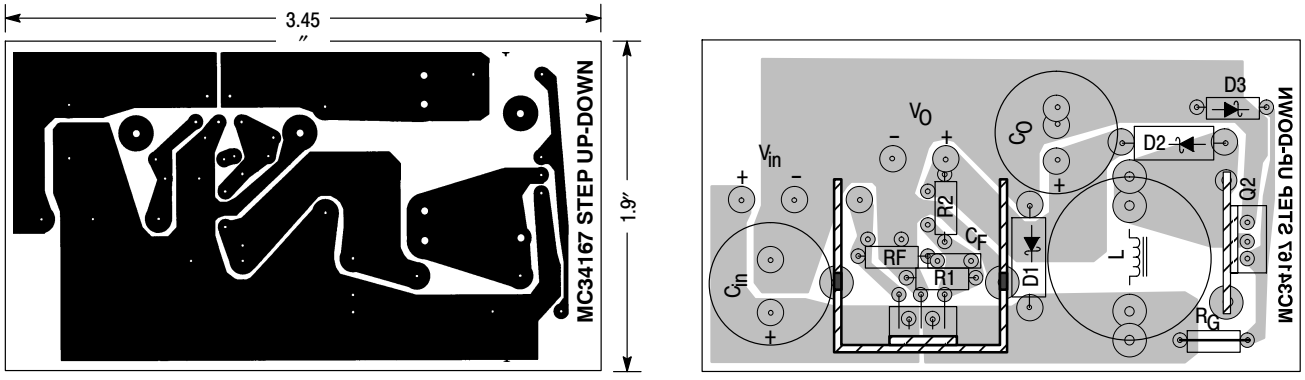

Figure 22. Step−Up/Down Converter Printed Circuit Board and Component Layout

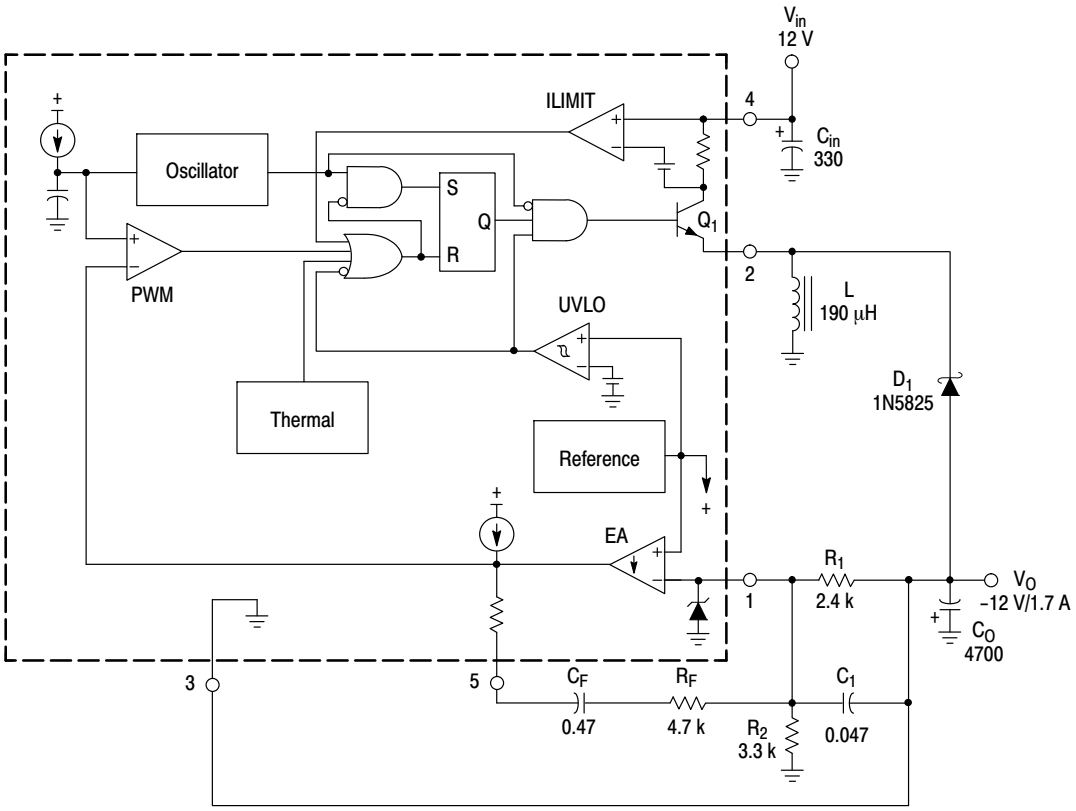

Test	Conditions	Results
Line Regulation	V_{in} = 10 V to 24 V, I_O = 1.7 A	15 mV = ± 0.61%
Load Regulation	V_{in} = 12 V, I_O = 0.1 A to 1.7 A	4.0 mV = ± 0.020%
Output Ripple	V_{in} = 12 V, I_O = 1.7 A	78 mV_{pp}
Short Circuit Current	V_{in} = 12 V, R_L = 0.1 Ω	5.7 A
Efficiency	V_{in} = 12 V, I_O = 1.7 A V_{in} = 24 V, I_O = 1.7 A	79.5% 86.2%

L = Coilcraft M1496−A or General Magnetics Technology GMT−0223, 42 turns of #16 AWG on Magnetics Inc. 58350−A2 core. Heatsink = AAVID Engineering Inc. 5903B, or 5930B.

Two potential problems arise when designing the standard voltage−inverting converter with the MC34167. First, the Switch Output emitter is limited to −1.5 V with respect to the ground pin and second, the Error Amplifier's noninverting input is internally committed to the reference and is not pinned out. Both of these problems are resolved by connecting the IC ground pin to the converter's negative output as shown in Figure 23. This keeps the emitter of Q_1 positive with respect to the ground pin and has the effect of reversing the Error Amplifier inputs. Note that the voltage drop across R_1 is equal to 5.05 V when the output is in regulation.

Figure 23. Voltage−Inverting Converter

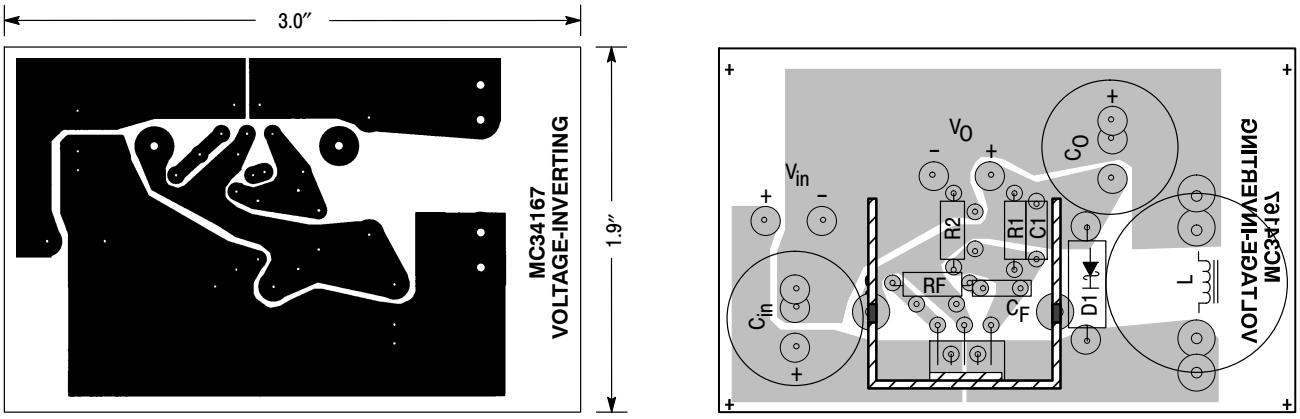

Figure 24. Voltage−Inverting Converter Printed Circuit Board and Component Layout

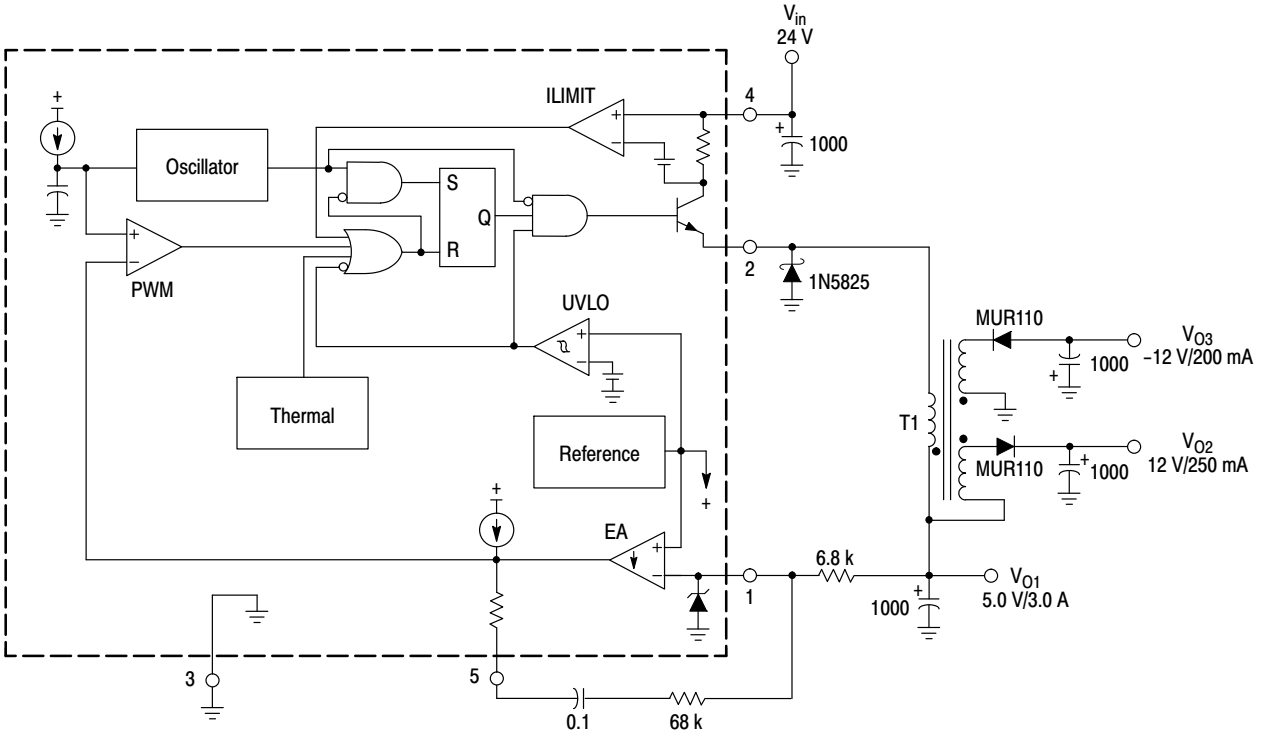

Figure 25. Triple Output Converter

Tests		Conditions	Results
Line Regulation	5.0 V 12 V −12 V	V_{in} = 15 V to 30 V, I_{O1} = 3.0 A, I_{O2} = 250 mA, I_{O3} = 200 mA	3.0 mV = ± 0.029% 572 mV = ± 2.4% 711 mV = ± 2.9%
Load Regulation	5.0 V 12 V −12 V	V_{in} = 24 V, I_{O1} = 30 mA to 3.0 A, I_{O2} = 250 mA, I_{O3} = 200 mA V_{in} = 24 V, I_{O1} = 3.0 A, I_{O2} = 100 mA to 250 mA, I_{O3} = 200 mA V_{in} = 24 V, I_{O1} = 3.0 A, I_{O2} = 250 mA, I_{O3} = 75 mA to 200 mA	1.0 mV = ± 0.009% 409 mV = ±1.5% 528 mV = ± 2.0%
Output Ripple	5.0 V 12 V −12 V	V_{in} = 24 V, I_{O1} = 3.0 A, I_{O2} = 250 mA, I_{O3} = 200 mA	75 mV_{pp} 20 mV_{pp} 20 mV_{pp}
Short Circuit Current	5.0 V 12 V −12 V	V_{in} = 24 V, R_L = 0.1 Ω	6.5 A 2.7 A 2.2 A
Efficiency	TOTAL	V_{in} = 24 V, I_{O1} = 3.0 A, I_{O2} = 250 mA, I_{O3} = 200 mA	84.2%

T1 = Primary: Coilcraft M1496−A or General Magnetics Technology GMT−0223, 42 turns of #16 AWG on Magnetics Inc. 58350−A2 core.
Secondary: V_{O2} − 69 turns of #26 AWG
V_{O3} − 104 turns of #28 AWG
Heatsink = AAVID Engineering Inc. 5903B, or 5930B.

Multiple auxiliary outputs can easily be derived by winding secondaries on the main output inductor to form a transformer. The secondaries must be connected so that the energy is delivered to the auxiliary outputs when the Switch Output turns off. During the OFF time, the voltage across the primary winding is regulated by the feedback loop, yielding a constant Volts/Turn ratio. The number of turns for any given secondary voltage can be calculated by the following equation:

$$\#\,\text{TURNS}_{(SEC)} = \frac{V_{O(SEC)} + V_{F(SEC)}}{\left(\frac{V_{O(PRI)} + V_{F(PRI)}}{\#\text{TURNS}_{(PRI)}}\right)}$$

Note that the 12 V winding is stacked on top of the 5.0 V output. This reduces the number of secondary turns and improves lead regulation. For best auxiliary regulation, the auxiliary outputs should be less than 33% of the total output power.

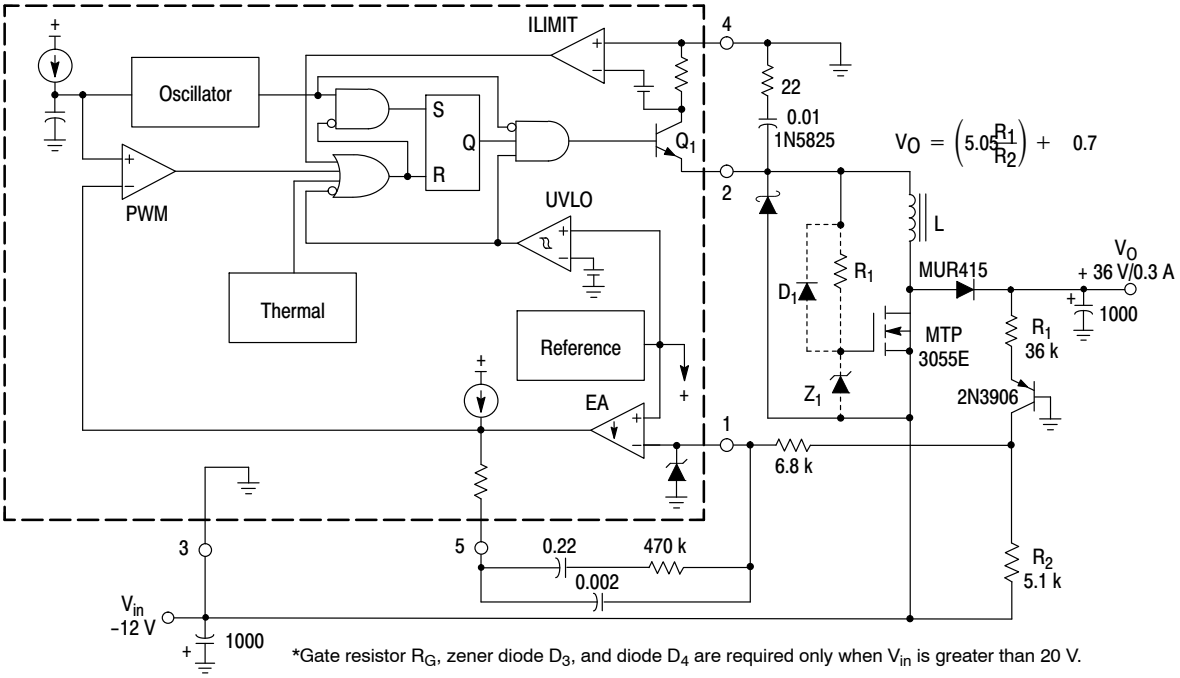

*Gate resistor R_G, zener diode D_3, and diode D_4 are required only when V_{in} is greater than 20 V.

Test	Conditions	Results
Line Regulation	V_{in} = −10 V to − 20 V, I_O = 0.3 A	266 mV = ± 0.38%
Load Regulation	V_{in} = −12 V, I_O = 0.03 A to 0.3 A	7.90 mV = ±1.1%
Output Ripple	V_{in} = −12 V, I_O = 0.3 A	100 mV_{pp}
Efficiency	V_{in} = −12 V, I_O = 0.3 A	78.4%

L = General Magnetics Technology GMT−0223, 42 turns of #16 AWG on Magnetics Inc. 58350−A2 core. Heatsink = AAVID Engineering Inc. 5903B or 5930B

Figure 26. Negative Input/Positive Output Regulator

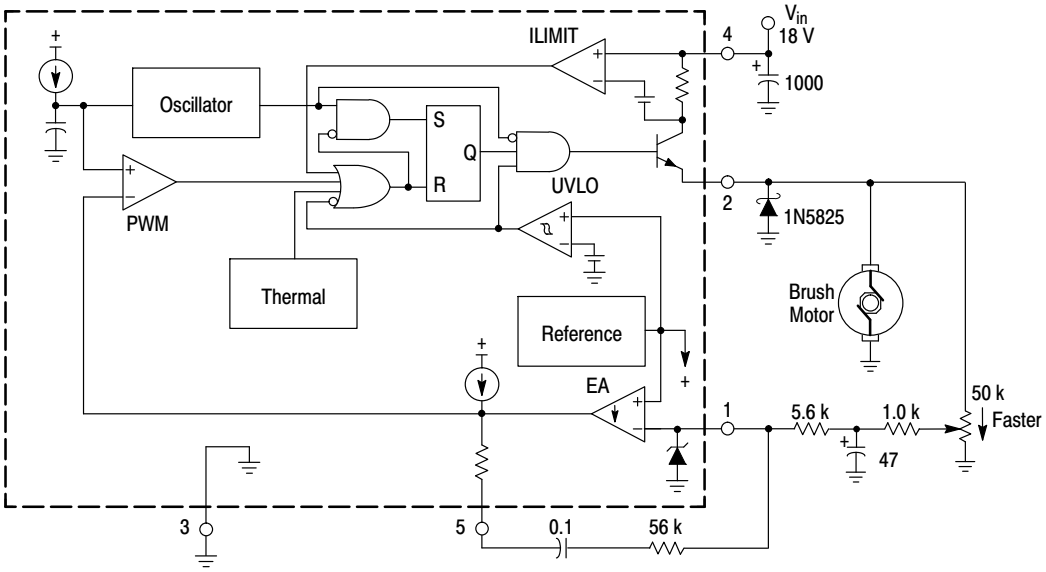

Test	Conditions	Results
Low Speed Line Regulation	V_{in} = 12 V to 24 V	1760 RPM ±1%
High Speed Line Regulation	V_{in} = 12 V to 24 V	3260 RPM ± 6%

Figure 27. Variable Motor Speed Control with EMF Feedback Sensing

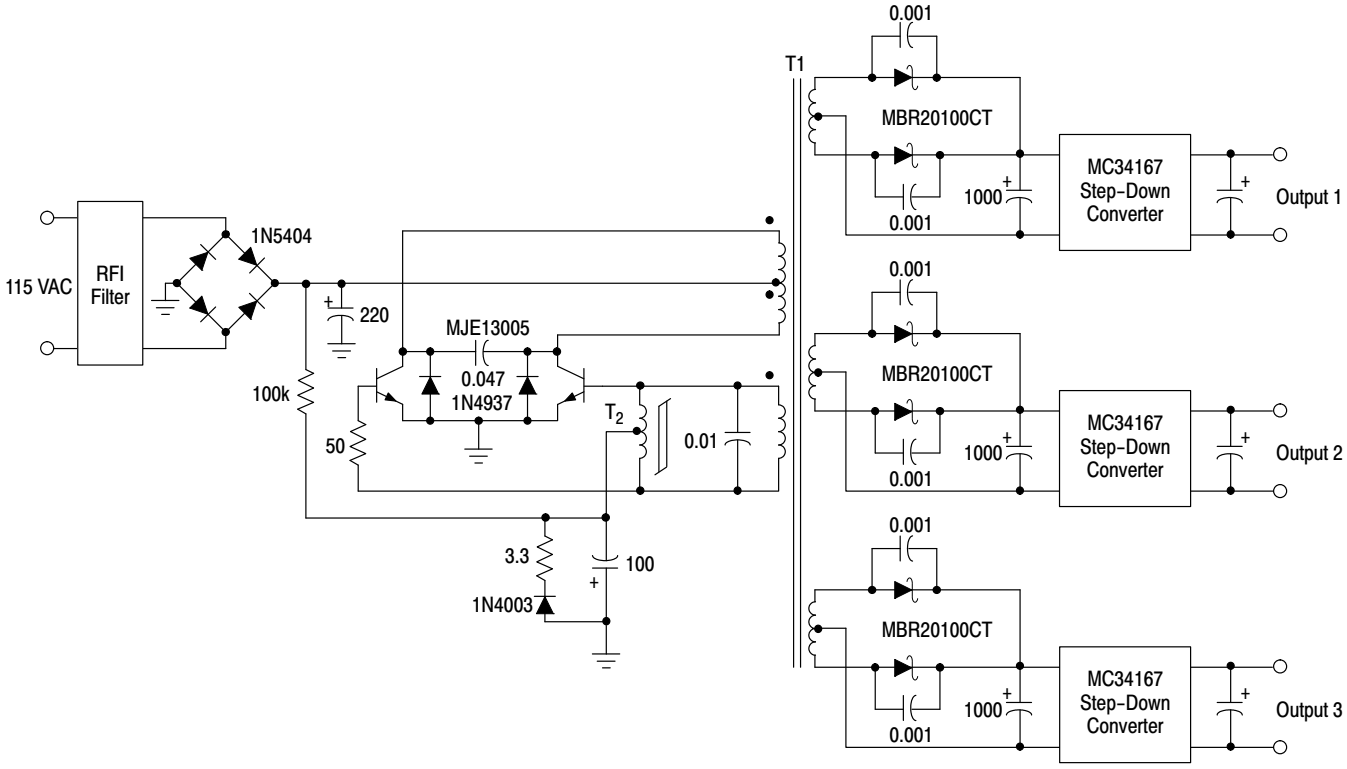

T_1 = Core and Bobbin – Coilcraft PT3595
Primary – 104 turns #26 AWG
Base Drive – 3 turns #26 AWG
Secondaries – 16 turns #16 AWG
Total Gap – 0.002,

T_2 = Core – TDK T6 x 1.5 x 3 H5C2
14 turns center tapped #30 AWG
Heatsink = AAVID Engineering Inc.
MC34167 and MJE13005 – 5903B
MBR20100CT – 5925B

The MC34167 can be used cost effectively in off−line applications even though it is limited to a maximum input voltage of 40 V. Figure 28 shows a simple and efficient method for converting the AC line voltage down to 24 V. This preconverter has a total power rating of 125 W with a conversion efficiency of 90%. Transformer T_1 provides output isolation from the AC line and isolation between each of the secondaries. The circuit self−oscillates at 50 kHz and is controlled by the saturation characteristics of T_2. Multiple MC34167 post regulators can be used to provide accurate independently regulated outputs for a distributed power system.

Figure 28. Off−Line Preconverter

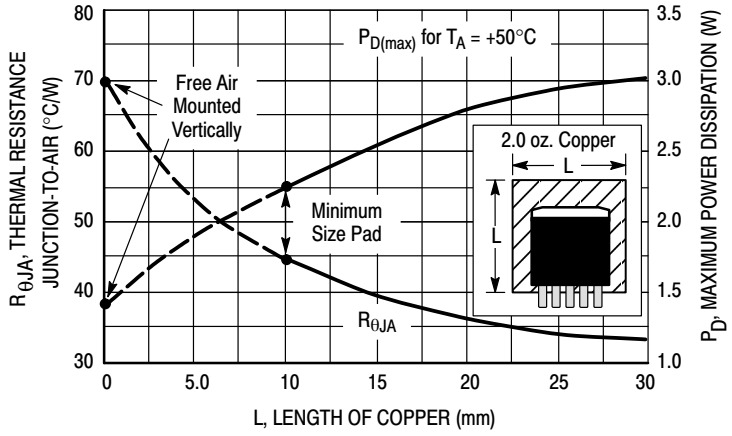

Figure 29. D²PAK Thermal Resistance and Maximum Power Dissipation versus P.C.B. Copper Length

Table 1. Design Equations

Calculation	Step−Down	Step−Up/Down	Voltage−Inverting
$\frac{t_{on}}{t_{off}}$ (Notes 1, 2)	$\frac{V_{out} + V_F}{V_{in} - V_{sat} - V_{out}}$	$\frac{V_{out} + V_{F1} + V_{F2}}{V_{in} - V_{satQ1} - V_{satQ2}}$	$\frac{\lvert V_{out}\rvert + V_F}{V_{in} - V_{sat}}$
t_{on}	$\frac{\frac{t_{on}}{t_{off}}}{f_{osc}\left(\frac{t_{on}}{t_{off}} + 1\right)}$	$\frac{\frac{t_{on}}{t_{off}}}{f_{osc}\left(\frac{t_{on}}{t_{off}} + 1\right)}$	$\frac{\frac{t_{on}}{t_{off}}}{f_{osc}\left(\frac{t_{on}}{t_{off}} + 1\right)}$
Duty Cycle (Note 3)	$t_{on}\, f_{osc}$	$t_{on}\, f_{osc}$	$t_{on}\, f_{osc}$
$I_{L\ avg}$	I_{out}	$I_{out}\left(\frac{t_{on}}{t_{off}} + 1\right)$	$I_{out}\left(\frac{t_{on}}{t_{off}} + 1\right)$
$I_{pk(switch)}$	$I_{L\ avg} + \frac{\Delta I_L}{2}$	$I_{L\ avg} + \frac{\Delta I_L}{2}$	$I_{L\ avg} + \frac{\Delta I_L}{2}$
L	$\left(\frac{V_{in} - V_{sat} - V_{out}}{\Delta I_L}\right)t_{on}$	$\left(\frac{V_{in} - V_{satQ1} - V_{satQ2}}{\Delta I_L}\right)t_{on}$	$\left(\frac{V_{in} - V_{sat}}{\Delta I_L}\right)t_{on}$
$V_{ripple(pp)}$	$\Delta I_L \sqrt{\left(\frac{1}{8 f_{osc} C_o}\right)^2 + (ESR)^2}$	$\left(\frac{t_{on}}{t_{off}} + 1\right)\sqrt{\left(\frac{1}{f_{osc} C_o}\right)^2 + (ESR)^2}$	$\left(\frac{t_{on}}{t_{off}} + 1\right)\sqrt{\left(\frac{1}{f_{osc} C_o}\right)^2 + (ESR)^2}$
V_{out}	$V_{ref}\left(\frac{R_2}{R_1} + 1\right)$	$V_{ref}\left(\frac{R_2}{R_1} + 1\right)$	$V_{ref}\left(\frac{R_2}{R_1} + 1\right)$

1. V_{sat} − Switch Output source saturation voltage, refer to Figure 8.
2. V_F − Output rectifier forward voltage drop. Typical value for 1N5822 Schottky barrier rectifier is 0.35 V.
3. Duty cycle is calculated at the minimum operating input voltage and must not exceed the guaranteed minimum $DC_{(max)}$ specification of 0.92.

The following converter characteristics must be chosen:

V_{out} − Desired output voltage.

I_{out} − Desired output current.

ΔI_L − Desired peak−to−peak inductor ripple current. For maximum output current especially when the duty cycle is greater than 0.5, it is suggested that ΔI_L be chosen minimum current limit threshold of 5.5 A. If the design goal is to use a minimum inductance value, let $\Delta I_L = 2\ (I_{L\ avg})$. This will proportionally reduce the converter's output current capability.

$V_{ripple(pp)}$ − Desired peak−to−peak output ripple voltage. For best performance, the ripple voltage should be kept to less than 2% of V_{out}. Capacitor C_O should be a low equivalent series resistance (ESR) electrolytic designed for switching regulator applications.

ORDERING INFORMATION

Device	Operating Temperature Range	Package	Shipping†
MC33167D2TG	T_A= −40° to +85°C	D^2PAK (Surface Mount) (Pb−Free)	50 Units / Rail
MC33167D2TR4G		D^2PAK (Surface Mount) (Pb−Free)	800 / Tape & Reel
MC33167TVG		TO−220 (Vertical Mount) (Pb−Free)	50 Units / Rail
MC34167D2TG	T_A= 0° to +70°C	D^2PAK (Surface Mount) (Pb−Free)	50 Units / Rail
MC34167D2TR4G		D^2PAK (Surface Mount) (Pb−Free)	800 / Tape & Reel

DISCONTINUED (Note 4)

MC34167TVG	T_A= 0° to +70°C	TO−220 (Vertical Mount) (Pb−Free)	50 Units / Rail

†For information on tape and reel specifications, including part orientation and tape sizes, please refer to our Tape and Reel Packaging Specifications Brochure, BRD8011/D.

4. **DISCONTINUED:** This device is not recommended for new design. Please contact your **onsemi** representative for information. The most current information on this device may be available on www.onsemi.com.

MECHANICAL CASE OUTLINE
PACKAGE DIMENSIONS

ON Semiconductor®

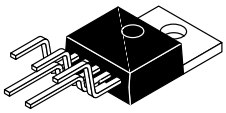

SCALE 1:1

TO−220 5 LEAD OFFSET
CASE 314B−05
ISSUE L

DATE 01/07/1994

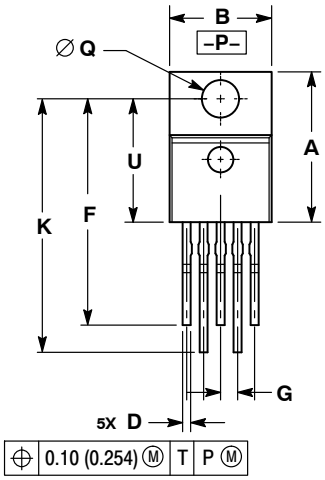

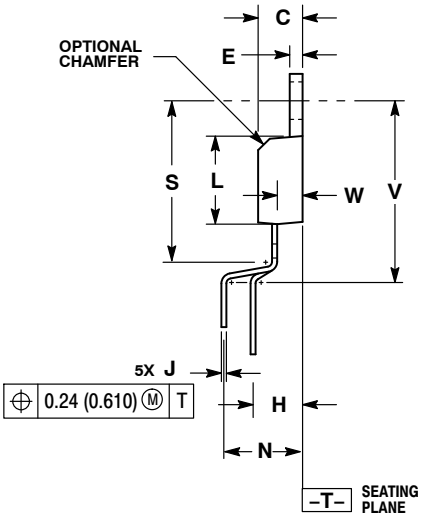

NOTES:
1. DIMENSIONING AND TOLERANCING PER ANSI Y14.5M, 1982.
2. CONTROLLING DIMENSION: INCH.
3. DIMENSION D DOES NOT INCLUDE INTERCONNECT BAR (DAMBAR) PROTRUSION. DIMENSION D INCLUDING PROTRUSION SHALL NOT EXCEED 0.043 (1.092) MAXIMUM.

	INCHES		MILLIMETERS	
DIM	MIN	MAX	MIN	MAX
A	0.572	0.613	14.529	15.570
B	0.390	0.415	9.906	10.541
C	0.170	0.180	4.318	4.572
D	0.025	0.038	0.635	0.965
E	0.048	0.055	1.219	1.397
F	0.850	0.935	21.590	23.749
G	0.067 BSC		1.702 BSC	
H	0.166 BSC		4.216 BSC	
J	0.015	0.025	0.381	0.635
K	0.900	1.100	22.860	27.940
L	0.320	0.365	8.128	9.271
N	0.320 BSC		8.128 BSC	
Q	0.140	0.153	3.556	3.886
S	---	0.620	---	15.748
U	0.468	0.505	11.888	12.827
V	---	0.735	---	18.669
W	0.090	0.110	2.286	2.794

STYLE 1 THRU 4:
CANCELLED

STYLE 5:
PIN 1. GATE
2. MIRROR
3. DRAIN
4. KELVIN
5. SOURCE

DOCUMENT NUMBER:	**98ASB42218B**	Electronic versions are uncontrolled except when accessed directly from the Document Repository. Printed versions are uncontrolled except when stamped "CONTROLLED COPY" in red.	
DESCRIPTION:	**TO−220 5 LEAD OFFSET**		**PAGE 1 OF 1**

ON Semiconductor and ON are trademarks of Semiconductor Components Industries, LLC dba ON Semiconductor or its subsidiaries in the United States and/or other countries. ON Semiconductor reserves the right to make changes without further notice to any products herein. ON Semiconductor makes no warranty, representation or guarantee regarding the suitability of its products for any particular purpose, nor does ON Semiconductor assume any liability arising out of the application or use of any product or circuit, and specifically disclaims any and all liability, including without limitation special, consequential or incidental damages. ON Semiconductor does not convey any license under its patent rights nor the rights of others.

© Semiconductor Components Industries, LLC, 2019

MECHANICAL CASE OUTLINE
PACKAGE DIMENSIONS

ON Semiconductor®

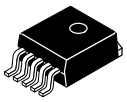

D²PAK 5−LEAD
CASE 936A−02
ISSUE E

DATE 28 JUL 2021

SCALE 1:1

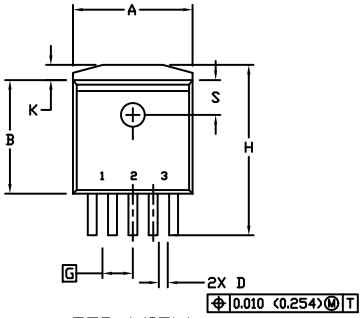

TOP VIEW

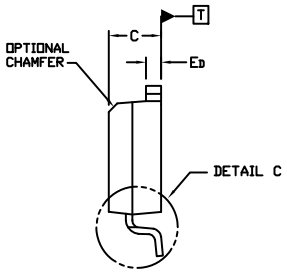

SIDE VIEW
DUAL GUAGE CONSTRUCTION

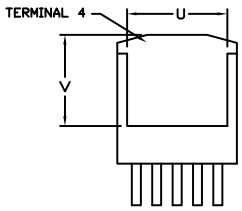

BOTTOM VIEW

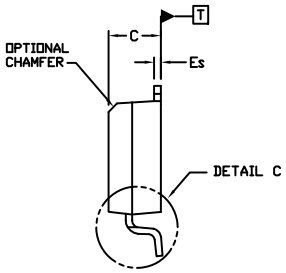

SIDE VIEW
SINGLE GUAGE CONSTRUCTION

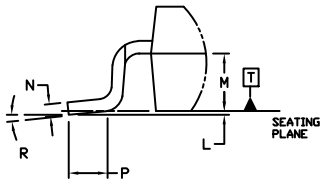

DETAIL C
TIP LEADFORM
ROTATED 90° CW

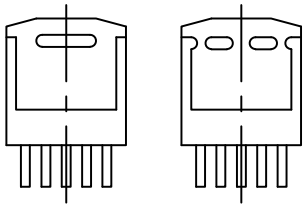

BOTTOM VIEW
OPTIONAL CONSTRUCTIONS

NOTES:

1. DIMENSIONING AND TOLERANCING PER ANSI Y14.5M, 1982.
2. CONTROLLING DIMENSION: INCHES
3. TAB CONTOUR OPTIONAL WITHIN DIMENSIONS A AND K.
4. DIMENSIONS U AND V ESTABLISH A MINIMUM MOUNTING SURFACE FOR TERMINAL 4.
5. DIMENSIONS A AND B DO NOT INCLUDE MOLD FLASH OR GATE PROTRUSIONS. MOLD FLASH AND GATE PROTRUSIONS NOT TO EXCEED 0.025 (0.635) MAXIMUM.

	INCHES		MILLIMETERS	
DIM	MIN.	MAX.	MIN.	MAX.
A	0.396	0.403	9.804	10.236
B	0.356	0.368	9.042	9.347
C	0.170	0.180	4.318	4.572
D	0.026	0.036	0.660	0.914
ED	0.045	0.055	1.143	1.397
ES	0.018	0.026	0.457	0.660
G	0.067 BSC		1.702 BSC	
H	0.539	0.579	13.691	14.707
K	0.050 REF		1.270 REF	
L	0.000	0.010	0.000	0.254
M	0.088	0.102	2.235	2.591
N	0.018	0.026	0.457	0.660
P	0.058	0.078	1.473	1.981
R	0°	8°	0°	8°
S	0.116 REF		2.946 REF	
U	0.200 MIN		5.080 MIN	
V	0.250 MIN		6.350 MIN	

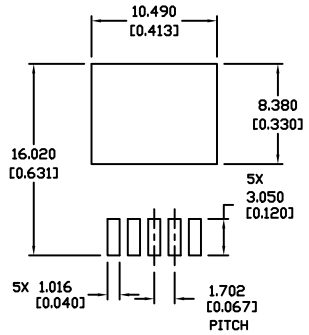

RECOMMENDED
MOUNTING FOOTPRINT *

* For additional information on our Pb-Free strategy and soldering details, please download the ON Semiconductor Soldering and Mounting Techniques Reference Manual, SOLDERRM/D.

GENERIC MARKING DIAGRAM*

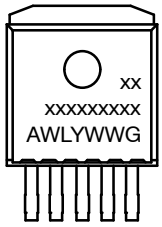

XXXXXX	= Device Code
A	= Assembly Location
WL	= Wafer Lot
Y	= Year
WW	= Work Week
G	= Pb−Free Package

*This information is generic. Please refer to device data sheet for actual part marking. Pb−Free indicator, “G” or microdot “▪”, may or may not be present. Some products may not follow the Generic Marking.

DOCUMENT NUMBER:	**98ASH01006A**	Electronic versions are uncontrolled except when accessed directly from the Document Repository. Printed versions are uncontrolled except when stamped “CONTROLLED COPY” in red.
DESCRIPTION:	**D2PAK 5−LEAD**	**PAGE 1 OF 1**

ON Semiconductor and ON are trademarks of Semiconductor Components Industries, LLC dba ON Semiconductor or its subsidiaries in the United States and/or other countries. ON Semiconductor reserves the right to make changes without further notice to any products herein. ON Semiconductor makes no warranty, representation or guarantee regarding the suitability of its products for any particular purpose, nor does ON Semiconductor assume any liability arising out of the application or use of any product or circuit, and specifically disclaims any and all liability, including without limitation special, consequential or incidental damages. ON Semiconductor does not convey any license under its patent rights nor the rights of others.

© Semiconductor Components Industries, LLC, 2019

onsemi, , and other names, marks, and brands are registered and/or common law trademarks of Semiconductor Components Industries, LLC dba "**onsemi**" or its affiliates and/or subsidiaries in the United States and/or other countries. **onsemi** owns the rights to a number of patents, trademarks, copyrights, trade secrets, and other intellectual property. A listing of **onsemi**'s product/patent coverage may be accessed at www.onsemi.com/site/pdf/Patent−Marking.pdf. **onsemi** reserves the right to make changes at any time to any products or information herein, without notice. The information herein is provided "as−is" and **onsemi** makes no warranty, representation or guarantee regarding the accuracy of the information, product features, availability, functionality, or suitability of its products for any particular purpose, nor does **onsemi** assume any liability arising out of the application or use of any product or circuit, and specifically disclaims any and all liability, including without limitation special, consequential or incidental damages. Buyer is responsible for its products and applications using **onsemi** products, including compliance with all laws, regulations and safety requirements or standards, regardless of any support or applications information provided by **onsemi**. "Typical" parameters which may be provided in **onsemi** data sheets and/or specifications can and do vary in different applications and actual performance may vary over time. All operating parameters, including "Typicals" must be validated for each customer application by customer's technical experts. **onsemi** does not convey any license under any of its intellectual property rights nor the rights of others. **onsemi** products are not designed, intended, or authorized for use as a critical component in life support systems or any FDA Class 3 medical devices or medical devices with a same or similar classification in a foreign jurisdiction or any devices intended for implantation in the human body. Should Buyer purchase or use **onsemi** products for any such unintended or unauthorized application, Buyer shall indemnify and hold **onsemi** and its officers, employees, subsidiaries, affiliates, and distributors harmless against all claims, costs, damages, and expenses, and reasonable attorney fees arising out of, directly or indirectly, any claim of personal injury or death associated with such unintended or unauthorized use, even if such claim alleges that **onsemi** was negligent regarding the design or manufacture of the part. **onsemi** is an Equal Opportunity/Affirmative Action Employer. This literature is subject to all applicable copyright laws and is not for resale in any manner.

ADDITIONAL INFORMATION

TECHNICAL PUBLICATIONS:
Technical Library: www.onsemi.com/design/resources/technical−documentation
onsemi Website: www.onsemi.com

ONLINE SUPPORT: www.onsemi.com/support
For additional information, please contact your local Sales Representative at www.onsemi.com/support/sales