MC33363A

High Voltage Switching Regulator

The MC33363A is a monolithic high voltage switching regulator that is specifically designed to operate from a rectified 240 Vac line source. This integrated circuit features an on−chip 700 V / 1.5 A SENSEFET® power switch, 500 V active off−line startup FET, duty cycle controlled oscillator, current limiting comparator with a programmable threshold and leading edge blanking, latching pulse width modulator for double pulse suppression, high gain error amplifier, and a trimmed internal bandgap reference. Protective features include cycle−by−cycle current limiting, input undervoltage lockout with hysteresis, output overvoltage protection, and thermal shutdown. This device is available in a 16−lead dual−in−line and wide body surface mount packages.

Features

- Enhanced Power Capability Over MC33363
- On−Chip 700 V, 1.5 A SENSEFET Power Switch
- Rectified 240 Vac Line Source Operation
- On−Chip 500 V Active Off−Line Startup FET
- Latching PWM for Double Pulse Suppression
- Cycle−By−Cycle Current Limiting
- Input Undervoltage Lockout with Hysteresis
- Output Overvoltage Protection Comparator
- Trimmed Internal Bandgap Reference
- Internal Thermal Shutdown
- These are Pb−Free Devices*

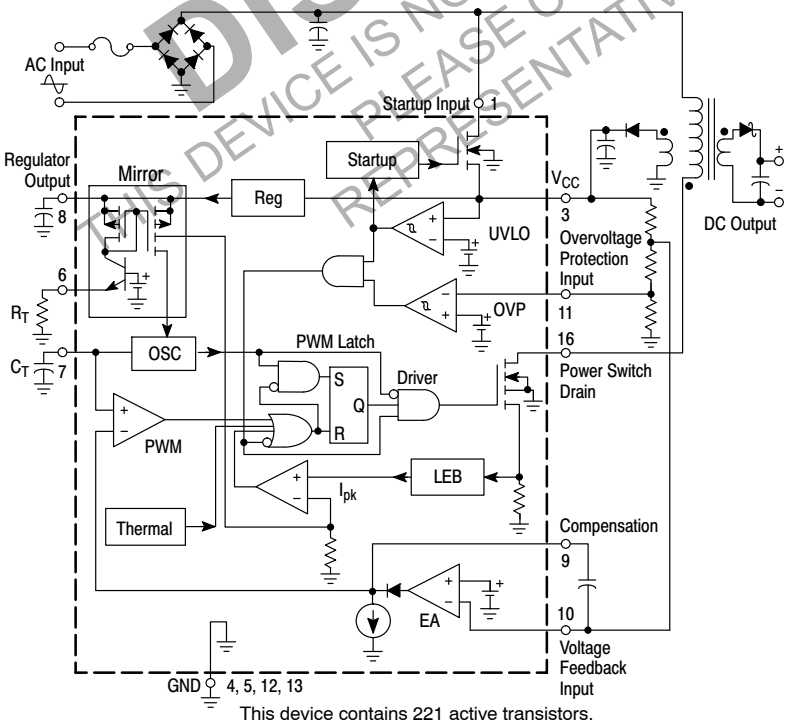

This device contains 221 active transistors.

Figure 1. Simplified Application

ON Semiconductor®

www.onsemi.com

MARKING DIAGRAMS



SO−16W
DW SUFFIX
CASE 751N

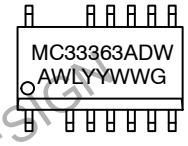

A = Assembly Location
WL = Wafer Lot
YY = Year
WW = Work Week
G = Pb−Free Package

PIN CONNECTIONS

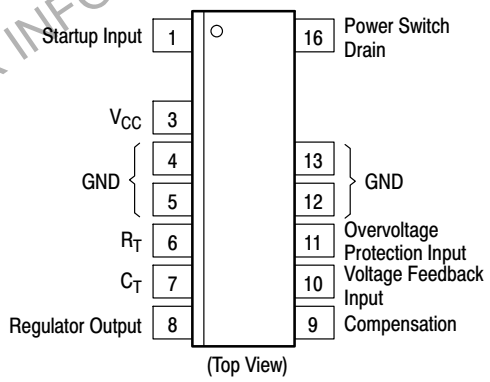

ORDERING INFORMATION

See detailed ordering and shipping information on page 7 of this data sheet.

*For additional information on our Pb−Free strategy and soldering details, please download the ON Semiconductor Soldering and Mounting Techniques Reference Manual, SOLDERRM/D.

DISCONTINUED
THIS DEVICE IS NOT RECOMMENDED FOR NEW DESIGN
PLEASE CONTACT YOUR onsemi
REPRESENTATIVE FOR INFORMATION

© Semiconductor Components Industries, LLC, 2015

MAXIMUM RATINGS (Note 1)

Rating	Symbol	Value	Unit
Power Switch (Pin 16) Drain Voltage Drain Current	 V_{DS} I_{DS}	 700 1.5	 V A
Startup Input Voltage (Pin 1)	V_{in}	500	V
Power Supply Voltage (Pin 3)	V_{CC}	40	V
Input Voltage Range Voltage Feedback Input (Pin 10) Compensation (Pin 9) Overvoltage Protection Input (Pin 11) R_T (Pin 6) C_T (Pin 7)	V_{IR}	−1.0 to V_{reg}	V
Thermal Characteristics − P Suffix, Dual−In−Line Case 648E Thermal Resistance, Junction−to−Air Thermal Resistance, Junction−to−Case (Pins 4, 5, 12, 13)	 $R_{\theta JA}$ $R_{\theta JC}$	 80 15	°C/W
DW Suffix, Surface Mount Case 751N Thermal Resistance, Junction−to−Air Thermal Resistance, Junction−to−Case (Pins 4, 5, 12, 13) Refer to Figures 17 and 18 for additional thermal information.	 $R_{\theta JA}$ $R_{\theta JC}$	 95 15	
Operating Junction Temperature	T_J	−25 to +150	°C
Storage Temperature	T_{stg}	−55 to +150	°C

Stresses exceeding those listed in the Maximum Ratings table may damage the device. If any of these limits are exceeded, device functionality should not be assumed, damage may occur and reliability may be affected.

1. This device series contains ESD protection and exceeds the following tests:
   Human Body Model 2000 V per JEDEC Standard JESD22, Method A114E.
   Machine Model Method 150 V per JEDEC Standard JESD22, Method A115A.

DISCONTINUED
THIS DEVICE IS NOT RECOMMENDED FOR NEW DESIGN
PLEASE CONTACT YOUR onsemi
REPRESENTATIVE FOR INFORMATION

ELECTRICAL CHARACTERISTICS (V_{CC} = 20 V, R_T = 10 k, C_T = 390 pF, C_{Pin8} = 1.0 μF, for typical values T_J = 25°C, for min/max values T_J is the operating junction temperature range that applies (Note 2), unless otherwise noted)

Characteristic	Symbol	Min	Typ	Max	Unit
REGULATOR (Pin 8)					
Output Voltage (I_O = 0 mA, T_J = 25°C)	V_{reg}	5.5	6.5	7.5	V
Line Regulation (V_{CC} = 20 V to 40 V)	Reg_{line}	−	30	500	mV
Load Regulation (I_O = 0 mA to 10 mA)	Reg_{load}	−	44	200	mV
Total Output Variation over Line, Load, and Temperature	V_{reg}	5.3	−	8.0	V
OSCILLATOR (Pin 7)					
Frequency C_T = 390 pF T_J = 25°C (V_{CC} = 20 V) T_J = T_{low} to T_{high} (V_{CC} = 20 V to 40 V) C_T = 2.0 nF T_J = 25°C (V_{CC} = 20 V) T_J = T_{low} to T_{high} (V_{CC} = 20 V to 40 V)	f_{OSC}	 260 255 60 59	 285 − 67.5 −	 310 315 75 76	kHz
Frequency Change with Voltage (V_{CC} = 20 V to 40 V)	$\Delta f_{OSC}/\Delta V$	−	0.1	2.0	kHz
ERROR AMPLIFIER (Pins 9, 10)					
Voltage Feedback Input Threshold	V_{FB}	2.52	2.6	2.68	V
Line Regulation (V_{CC} = 20 V to 40 V, T_J = 25°C)	Reg_{line}	−	0.6	5.0	mV
Input Bias Current (V_{FB} = 2.6 V)	I_{IB}	−	20	500	nA
Open Loop Voltage Gain (T_J = 25°C)	A_{VOL}	−	82	−	dB

Product parametric performance is indicated in the Electrical Characteristics for the listed test conditions, unless otherwise noted. Product performance may not be indicated by the Electrical Characteristics if operated under different conditions.

2. Tested junction temperature range for the MC33363A:
   T_{low} = −25°C T_{high} = +125°C

ELECTRICAL CHARACTERISTICS (V_{CC} = 20 V, R_T = 10 k, C_T = 390 pF, C_{Pin8} = 1.0 μF, for typical values T_J = 25°C, for min/max values T_J is the operating junction temperature range that applies (Note 2), unless otherwise noted)

Characteristic	Symbol	Min	Typ	Max	Unit
ERROR AMPLIFIER (Pins 9, 10)					
Gain Bandwidth Product (f = 100 kHz, T_J = 25°C)	GBW	–	1.0	–	MHz
Output Voltage Swing High State (I_{Source} = 100 μA, V_{FB} < 2.0 V) Low State (I_{Sink} = 100 μA, V_{FB} > 3.0 V)	 V_{OH} V_{OL}	 4.0 –	 5.3 0.2	 – 0.35	V
OVERVOLTAGE DETECTION (Pin 11)					
Input Threshold Voltage	V_{th}	2.47	2.6	2.73	V
Input Bias Current (V_{in} = 2.6 V)	I_{IB}	–	100	500	nA
PWM COMPARATOR (Pins 7, 9)					
Duty Cycle Maximum (V_{FB} = 0 V) Minimum (V_{FB} = 2.7 V)	 $DC_{(max)}$ $DC_{(min)}$	 48 –	 50 0	 52 0	%
POWER SWITCH (Pin 16)					
Drain−Source On−State Resistance (I_D = 200 mA) T_J = 25°C T_J = T_{low} to T_{high}	$R_{DS(on)}$	 – –	 7.5 –	 9.0 20	Ω
Drain−Source Off−State Leakage Current (V_{DS} = 650 V) T_J = 25°C T_J = T_{low} to T_{high}	$I_{D(off)}$	 – –	 0.25 –	 1.0 50	μA
Rise Time	t_r	–	50	–	ns
Fall Time	t_f	–	50	–	ns
OVERCURRENT COMPARATOR (Pin 16)					
Current Limit Threshold (R_T = 13 k)	I_{lim}	0.7	0.9	1.1	A
STARTUP CONTROL (Pin 1)					
Peak Startup Current (V_{in} = 50 V) (T_J = −25°C to 100°C) V_{CC} = 0 V V_{CC} = ($V_{th(on)}$ − 0.2 V)	I_{start}	 2.0 2.0	 5.0 5.0	 8.0 8.0	mA
Off−State Leakage Current (V_{in} = 50 V, V_{CC} = 20 V)	$I_{D(off)}$	–	40	200	μA
UNDERVOLTAGE LOCKOUT (Pin 3)					
Startup Threshold (V_{CC} Increasing)	$V_{th(on)}$	11	14.9	18	V
Minimum Operating Voltage After Turn−On	$V_{CC(min)}$	7.5	9.5	11.5	V
TOTAL DEVICE (Pin 3)					
Power Supply Current Startup (V_{CC} = 10 V, Pin 1 Open) Operating	I_{CC}	 – –	 0.27 3.4	 0.5 5.0	mA

Product parametric performance is indicated in the Electrical Characteristics for the listed test conditions, unless otherwise noted. Product performance may not be indicated by the Electrical Characteristics if operated under different conditions.

2. Tested junction temperature range for the MC33363A:
   T_{low} = −25°C T_{high} = +125°C

DISCONTINUED
THIS DEVICE IS NOT RECOMMENDED FOR NEW DESIGN
PLEASE CONTACT YOUR ON SEMI
REPRESENTATIVE FOR INFORMATION

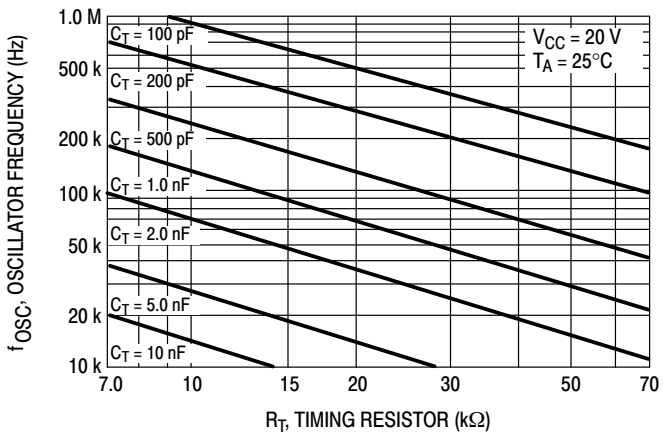

Figure 2. Oscillator Frequency versus Timing Resistor

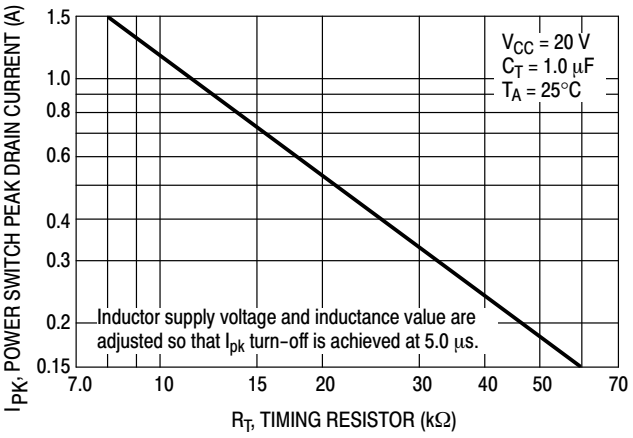

Figure 3. Power Switch Peak Drain Current versus Timing Resistor

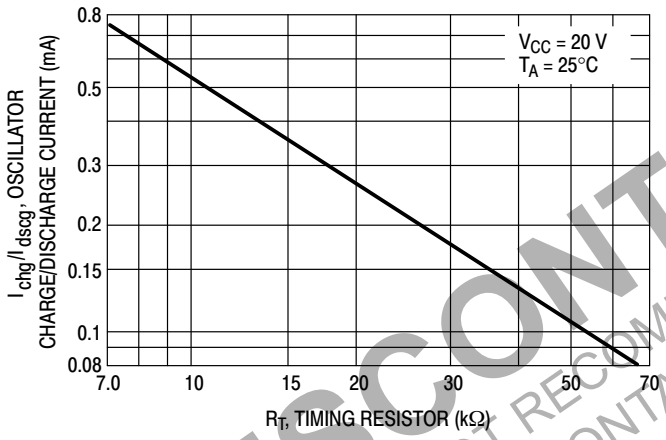

Figure 4. Oscillator Charge/Discharge Current versus Timing Resistor

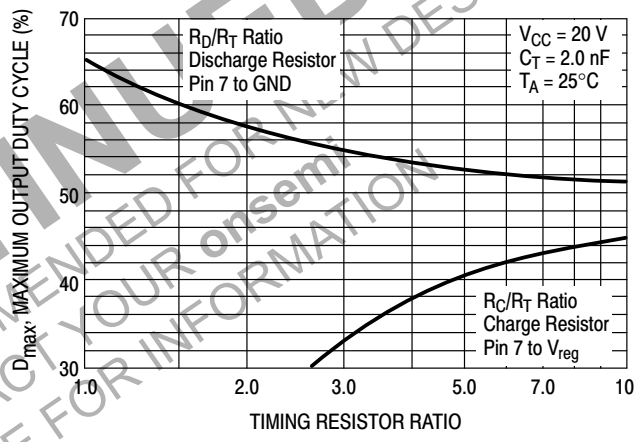

Figure 5. Maximum Output Duty Cycle versus Timing Resistor Ratio

DISCONTINUED
THIS DEVICE IS NOT RECOMMENDED FOR NEW DESIGN
PLEASE CONTACT YOUR onsemi
REPRESENTATIVE FOR INFORMATION

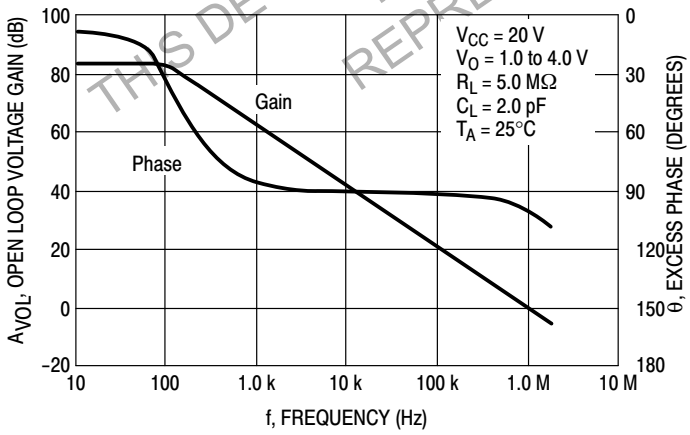

Figure 6. Error Amp Open Loop Gain and Phase versus Frequency

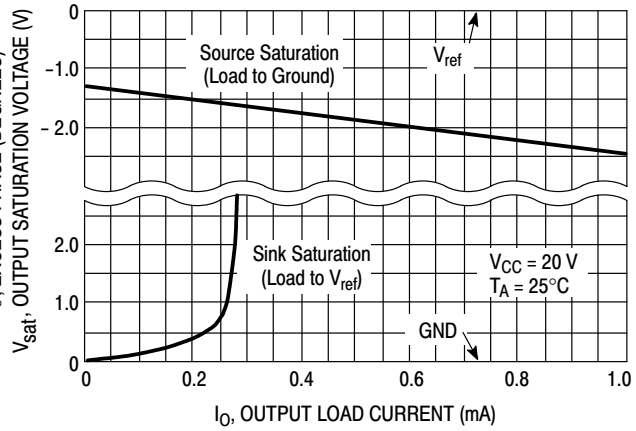

Figure 7. Error Amp Output Saturation Voltage versus Load Current

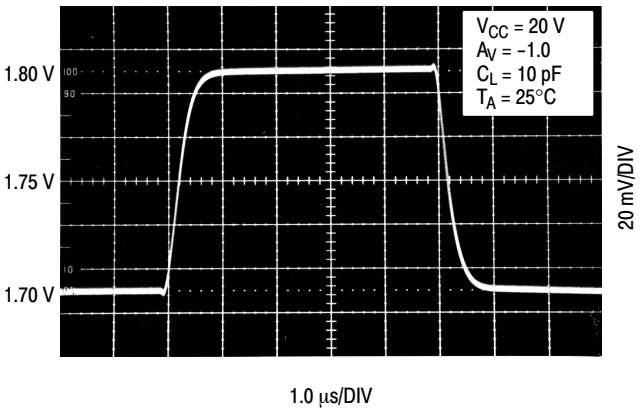

Figure 8. Error Amplifier Small Signal Transient Response

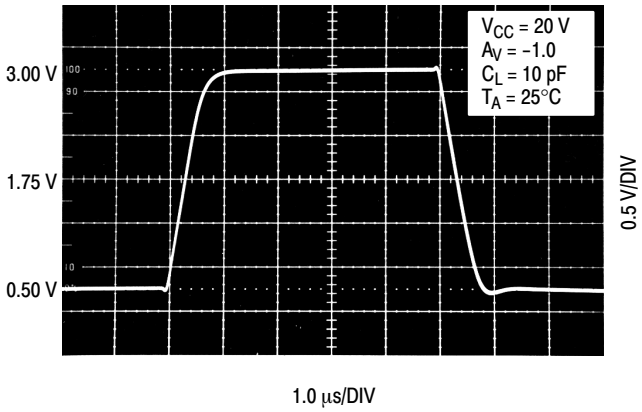

Figure 9. Error Amplifier Large Signal Transient Response

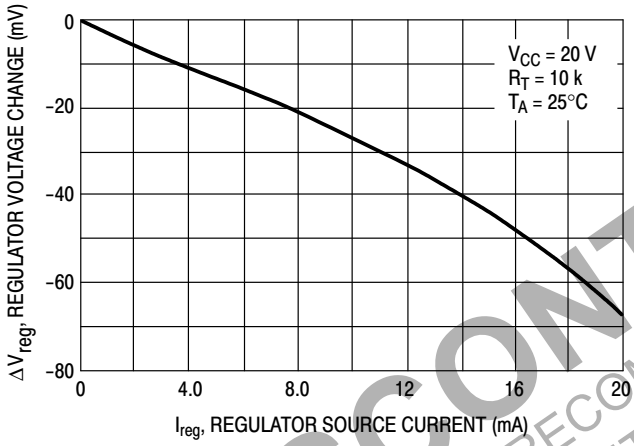

Figure 10. Regulator Output Voltage Change versus Source Current

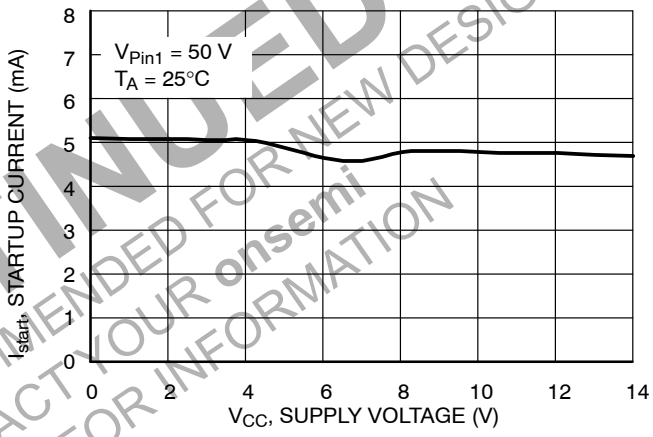

Figure 11. Peak Startup Current versus Power Supply Voltage

DISCONTINUED
THIS DEVICE IS NOT RECOMMENDED FOR NEW DESIGN
PLEASE CONTACT YOUR onsemi
REPRESENTATIVE FOR INFORMATION

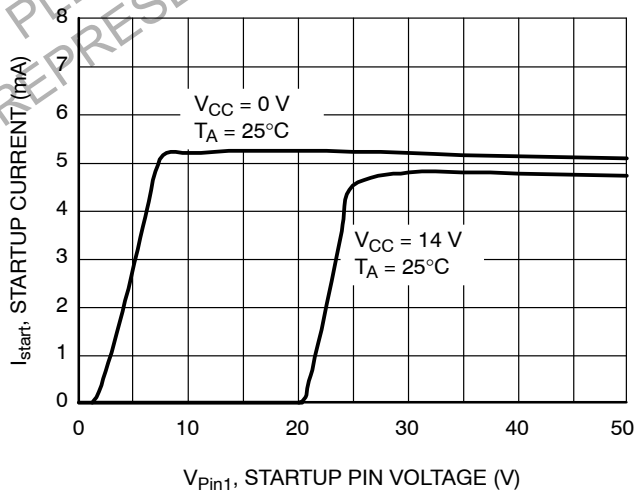

Figure 12. Peak Startup Current versus Startup Input Voltage

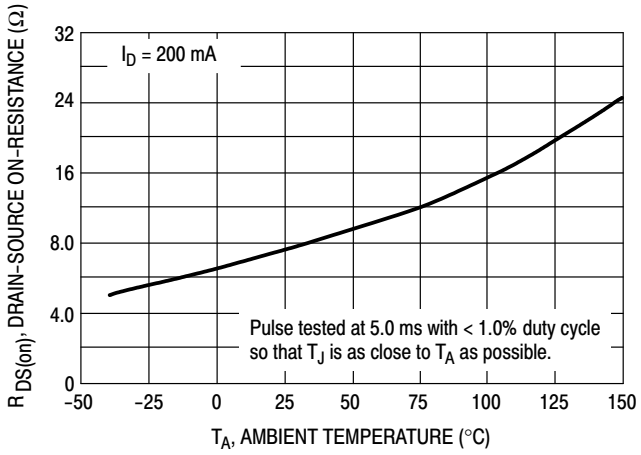

Figure 13. Power Switch Drain−Source On−Resistance versus Temperature

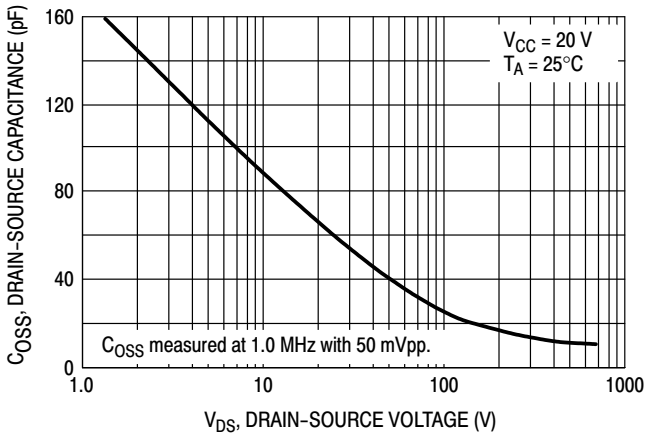

Figure 14. Power Switch Drain−Source Capacitance versus Voltage

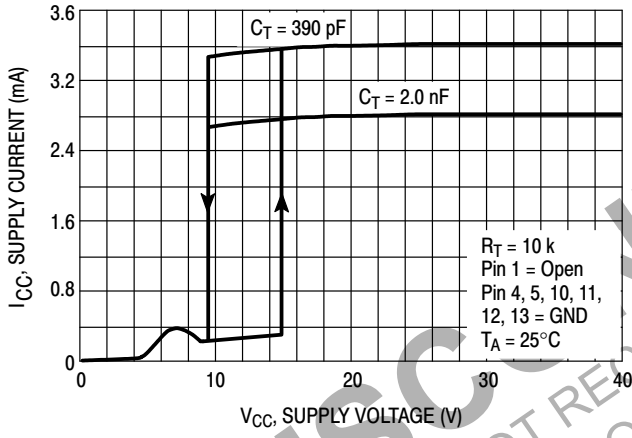

Figure 15. Supply Current versus Supply Voltage

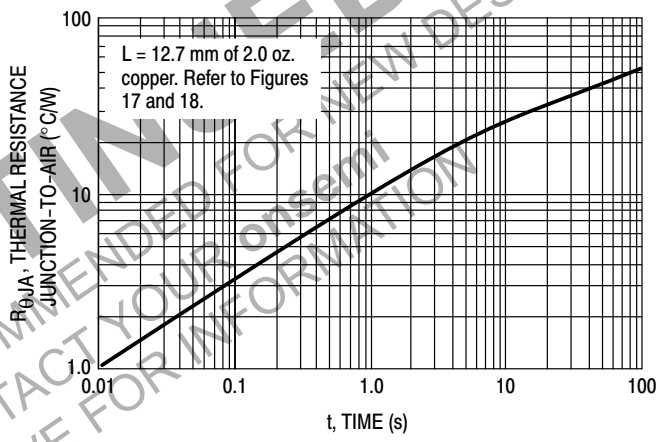

Figure 16. DW and P Suffix Transient Thermal Resistance

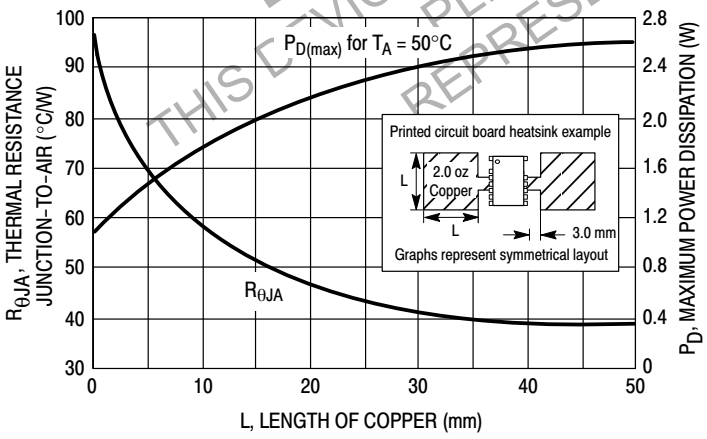

Figure 17. DW Suffix (SOP−16L) Thermal Resistance and Maximum Power Dissipation versus P.C.B. Copper Length

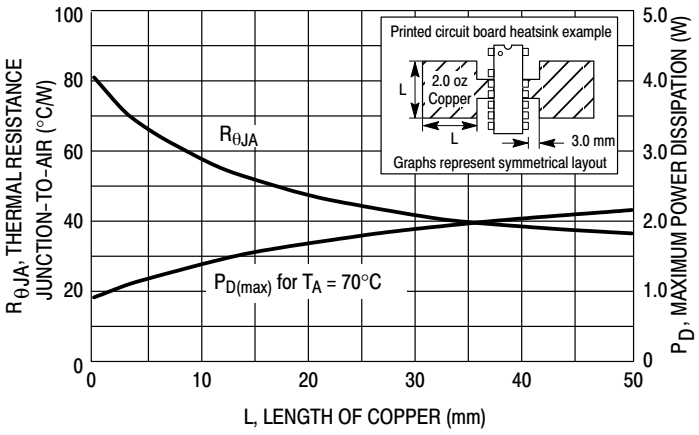

Figure 18. P Suffix (DIP−16) Thermal Resistance and Maximum Power Dissipation versus P.C.B. Copper Length

DISCONTINUED
THIS DEVICE IS NOT RECOMMENDED FOR NEW DESIGN
PLEASE CONTACT YOUR onsemi
REPRESENTATIVE FOR INFORMATION

PIN FUNCTION DESCRIPTION

Pin	Function	Description
1	Startup Input	This pin connects directly to the rectified ac line voltage source. Internally Pin 1 is tied to the drain of a high voltage startup MOSFET. During startup, the MOSFET supplies internal bias, and charges an external capacitor that connects from the V_{CC} pin to ground.
2	–	This pin has been omitted for increased spacing between the rectified ac line voltage on Pin 1 and the V_{CC} potential on Pin 3.
3	V_{CCCC}	This is the positive supply voltage input. During startup, power is supplied to this input from Pin 1. When V_{CC} reaches the UVLO upper threshold, the startup MOSFET turns off and power is supplied from an auxiliary transformer winding.
4, 5, 12, 13	GND	These pins are the control circuit grounds. They are part of the IC lead frame and provide a thermal path from the die to the printed circuit board.
6	R_T	Resistor R_T connects from this pin to ground. The value selected will program the Current Limit Comparator threshold and affect the Oscillator frequency.
7	C_T	Capacitor C_T connects from this pin to ground. The value selected, in conjunction with resistor R_T, programs the Oscillator frequency.
8	Regulator Output	This 6.5 V output is available for biasing external circuitry. It requires an external bypass capacitor of at least 1.0 μF for stability.
9	Compensation	This pin is the Error Amplifier output and is made available for loop compensation. It can be used as an input to directly control the PWM Comparator.
10	Voltage Feedback Input	This is the inverting input of the Error Amplifier. It has a 2.6 V threshold and normally connects through a resistor divider to the converter output, or to a voltage that represents the converter output.
11	Overvoltage Protection Input	This input provides runaway output voltage protection due to an external component or connection failure in the control loop feedback signal path. It has a 2.6 V threshold and normally connects through a resistor divider to the converter output, or to a voltage that represents the converter output.
14, 15	–	These pins have been omitted for increased spacing between the high voltages present on the Power Switch Drain, and the ground potential on Pins 12 and 13.
16	Power Switch Drain	This pin is designed to directly drive the converter transformer and is capable of switching a maximum of 700 V and 1.0 A.

DISCONTINUED
THIS DEVICE IS NOT RECOMMENDED FOR NEW DESIGN
PLEASE CONTACT YOUR onsemi
REPRESENTATIVE FOR INFORMATION

ORDERING INFORMATION

Device	Package	Shipping†
MC33363ADWG	SOIC−16WB (Pb−Free)	47 Units / Rail
MC33363ADWR2G	SOIC−16WB (Pb−Free)	1000 / Tape & Reel

†For information on tape and reel specifications, including part orientation and tape sizes, please refer to our Tape and Reel Packaging Specifications Brochure, BRD8011/D.

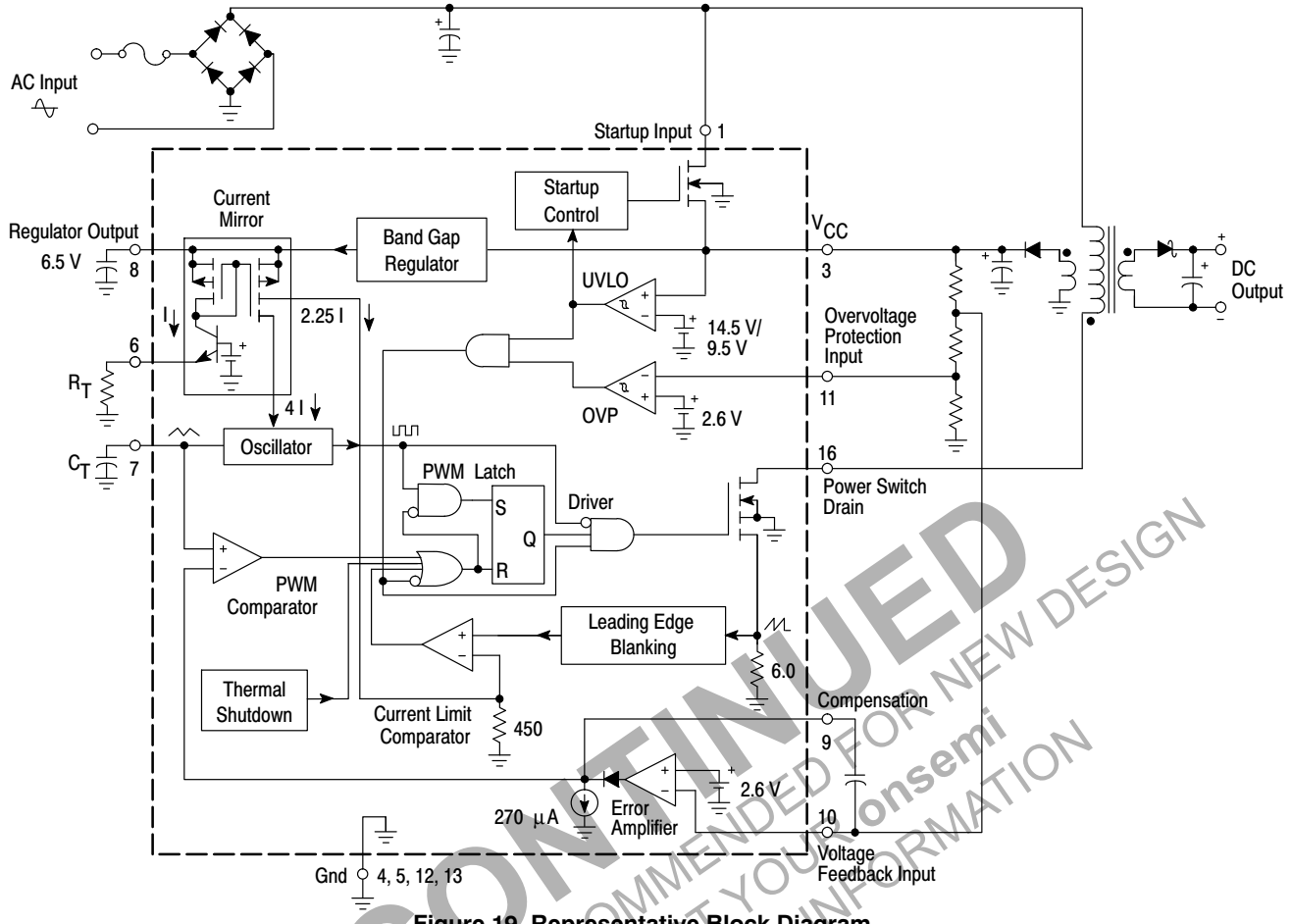

Figure 19. Representative Block Diagram

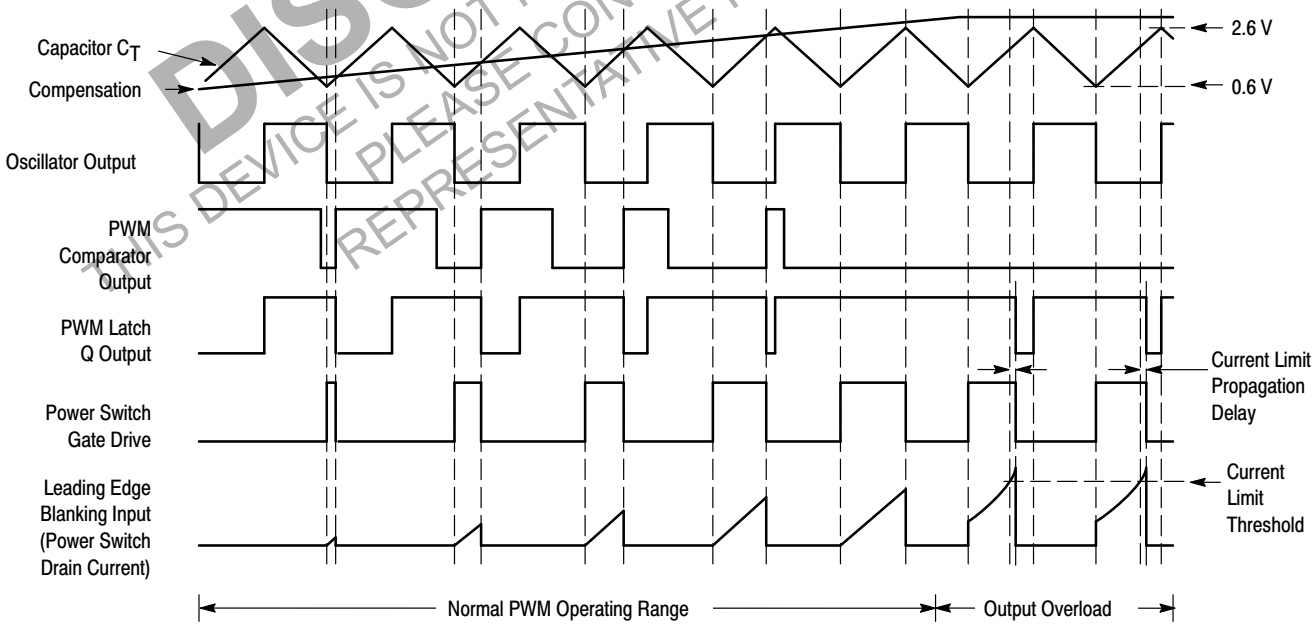

Figure 20. Timing Diagram

DISCONTINUED
THIS DEVICE IS NOT RECOMMENDED FOR NEW DESIGN
PLEASE CONTACT YOUR onsemi
REPRESENTATIVE FOR INFORMATION

OPERATING DESCRIPTION

Introduction

The MC33363A represents a new higher level of integration by providing all the active high voltage power, control, and protection circuitry required for implementation of a flyback or forward converter on a single monolithic chip. This device is designed for direct operation from a rectified 240 Vac line source and requires a minimum number of external components to implement a complete converter. A description of each of the functional blocks is given below, and the representative block and timing diagrams are shown in Figures 19 and 20.

Oscillator and Current Mirror

The oscillator frequency is controlled by the values selected for the timing components R_T and C_T. Resistor R_T programs the oscillator charge/discharge current via the Current Mirror 4 I output, Figure 4. Capacitor C_T is charged and discharged by an equal magnitude internal current source and sink. This generates a symmetrical 50% duty cycle waveform at Pin 7, with a peak and valley threshold of 2.6 V and 0.6 V respectively. During the discharge of C_T, the oscillator generates an internal blanking pulse that holds the inverting input of the AND gate driver high. This causes the Power Switch gate drive to be held in a low state, thus producing a well controlled amount of output deadtime. The amount of deadtime is relatively constant with respect to the oscillator frequency when operating below 1.0 MHz. The maximum Power Switch duty cycle at Pin 16 can be modified from the internal 50% limit by providing an additional charge or discharge current path to C_T, Figure 21. In order to increase the maximum duty cycle, a discharge current resistor R_D is connected from Pin 7 to ground. To decrease the maximum duty cycle, a charge current resistor R_C is connected from Pin 7 to the Regulator Output. Figure 5 shows an obtainable range of maximum output duty cycle versus the ratio of either R_C or R_D with respect to R_T.

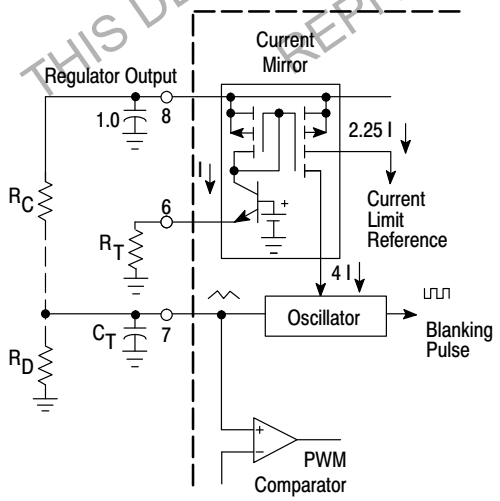

Figure 21. Maximum Duty Cycle Modification

The formula for the charge/discharge current along with the oscillator frequency are given below. The frequency formula is a first order approximation and is accurate for C_T values greater than 500 pF. For smaller values of C_T, refer to Figure 2. Note that resistor R_T also programs the Current Limit Comparator threshold.

$$I_{chg/dscg} = \frac{5.4}{R_T} \qquad f \approx \frac{I_{chg/dscg}}{4C_T}$$

PWM Comparator and Latch

The pulse width modulator consists of a comparator with the oscillator ramp voltage applied to the non−inverting input, while the error amplifier output is applied into the inverting input. The Oscillator applies a set pulse to the PWM Latch while C_T is discharging, and upon reaching the valley voltage, Power Switch conduction is initiated. When C_T charges to a voltage that exceeds the error amplifier output, the PWM Latch is reset, thus terminating Power Switch conduction for the duration of the oscillator ramp−up period. This PWM Comparator/Latch combination prevents multiple output pulses during a given oscillator clock cycle. The timing diagram shown in Figure 20 illustrates the Power Switch duty cycle behavior versus the Compensation voltage.

Current Limit Comparator and Power Switch

The MC33363A uses cycle−by−cycle current limiting as a means of protecting the output switch transistor from overstress. Each on−cycle is treated as a separate situation. Current limiting is implemented by monitoring the output switch current buildup during conduction, and upon sensing an overcurrent condition, immediately turning off the switch for the duration of the oscillator ramp−up period.

The Power Switch is constructed as a SENSEFET allowing a virtually lossless method of monitoring the drain current. It consists of a total of 2819 cells, of which 65 are connected to a 6.0 Ω ground−referenced sense resistor. The Current Sense Comparator detects if the voltage across the sense resistor exceeds the reference level that is present at the inverting input. If exceeded, the comparator quickly resets the PWM Latch, thus protecting the Power Switch. The current limit reference level is generated by the 2.25 I output of the Current Mirror. This current causes a reference voltage to appear across the 450 Ω resistor. This voltage level, as well as the Oscillator charge/discharge current are both set by resistor R_T. Therefore when selecting the values for R_T and C_T, R_T must be chosen first to set the Power Switch peak drain current, while C_T is chosen second to set the desired Oscillator frequency. A graph of the Power Switch peak drain current versus R_T is shown in Figure 3 with the related formula below.

$$I_{pk} = 15.95 \left(\frac{R_T}{1000}\right) - 1.14$$

The Power Switch is designed to directly drive the converter transformer and is capable of switching a

DISCONTINUED
THIS DEVICE IS NOT RECOMMENDED FOR NEW DESIGN
PLEASE CONTACT YOUR onsemi REPRESENTATIVE FOR INFORMATION

maximum of 700 V and 1.0 A. Proper device voltage snubbing and heatsinking are required for reliable operation.

A Leading Edge Blanking circuit was placed in the current sensing signal path. This circuit prevents a premature reset of the PWM Latch. The premature reset is generated each time the Power Switch is driven into conduction. It appears as a narrow voltage spike across the current sense resistor, and is due to the MOSFET gate to source capacitance, transformer interwinding capacitance, and output rectifier recovery time. The Leading Edge Blanking circuit has a dynamic behavior in that it masks the current signal until the Power Switch turn−on transition is completed. The current limit propagation delay time is typically 300 ns. This time is measured from when an overcurrent appears at the Power Switch drain, to the beginning of turn−off.

Error Amplifier

An fully compensated Error Amplifier with access to the inverting input and output is provided for primary side voltage sensing, Figure 19. It features a typical dc voltage gain of 82 dB, and a unity gain bandwidth of 1.0 MHz with 78 degrees of phase margin, Figure 6. The noninverting input is internally biased at 2.6 V ±3.1% and is not pinned out. The Error Amplifier output is pinned out for external loop compensation and as a means for directly driving the PWM Comparator. The output was designed with a limited sink current capability of 270 μA, allowing it to be easily overridden with a pull−up resistor. This is desirable in applications that require secondary side voltage sensing, Figure 22. In this application, the Voltage Feedback Input is connected to the Regulator Output. This disables the Error Amplifier by placing its output into the sink state, allowing the optocoupler transistor to directly control the PWM Comparator.

Overvoltage Protection

An Overvoltage Protection Comparator is included to eliminate the possibility of runaway output voltage. This condition can occur if the control loop feedback signal path is broken due to an external component or connection failure. The comparator is normally used to monitor the primary side V_{CC} voltage. When the 2.6 V threshold is exceeded, it will immediately turn off the Power Switch, and protect the load from a severe overvoltage condition. This input can also be driven from external circuitry to inhibit converter operation.

Undervoltage Lockout

An Undervoltage Lockout (UVLO) comparator has been incorporated to guarantee that the integrated circuit has sufficient voltage to be fully functional before the output stage is enabled. The UVLO comparator monitors the V_{CC} voltage at Pin 3 and when it exceeds 14.5 V, the reset signal is removed from the PWM Latch allowing operation of the Power Switch. To prevent erratic switching as the threshold is crossed, 5.0 V of hysteresis is provided.

Startup Control

An internal Startup Control circuit with a high voltage enhancement mode MOSFET is included within the MC33363A. This circuitry allows for increased converter efficiency by eliminating the external startup resistor, and its associated power dissipation, commonly used in most off−line converters that utilize a UC3842 type of controller. Rectified ac line voltage is applied to the Startup Input, Pin 1. This causes the MOSFET to enhance and supply internal bias as well as charge current to the V_{CC} bypass capacitor that connects from Pin 3 to ground. When V_{CC} reaches the UVLO upper threshold of 15.2 V, the IC commences operation and the startup MOSFET is turned off. Operating bias is now derived from the auxiliary transformer winding, and all of the device power is efficiently converted down from the rectified ac line.

Regulator

A low current 6.5 V regulated output is available for biasing the Error Amplifier and any additional control system circuitry. It is capable of up to 10 mA and has short−circuit protection. This output requires an external bypass capacitor of at least 1.0 μF for stability.

Thermal Shutdown and Package

Internal thermal circuitry is provided to protect the Power Switch in the event that the maximum junction temperature is exceeded. When activated, typically at 155°C, the Latch is forced into a ‘reset’ state, disabling the Power Switch. The Latch is allowed to ‘set’ when the Power Switch temperature falls below 145°C. This feature is provided to prevent catastrophic failures from accidental device overheating. It is not intended to be used as a substitute for proper heatsinking.

The MC33363A is contained in a heatsinkable plastic dual−in−line package in which the die is mounted on a special heat tab copper alloy lead frame. This tab consists of the four center ground pins that are specifically designed to improve thermal conduction from the die to the circuit board. Figures 17 and 18 show a simple and effective method of utilizing the printed circuit board medium as a heat dissipater by soldering these pins to an adequate area of copper foil. This permits the use of standard layout and mounting practices while having the ability to halve the junction to air thermal resistance. The examples are for a symmetrical layout on a single−sided board with two ounce per square foot of copper. Figure 23 shows a practical example of a printed circuit board layout that utilizes the copper foil as a heat dissipater. Note that a jumper was added to the layout from Pins 8 to 10 in order to enhance the copper area near the device for improved thermal conductivity. The application circuit requires two ounce copper foil in order to obtain 8.0 W of continuous output power at room temperature.

DISCONTINUED
THIS DEVICE IS NOT RECOMMENDED FOR NEW DESIGN
PLEASE CONTACT YOUR onsemi REPRESENTATIVE FOR INFORMATION

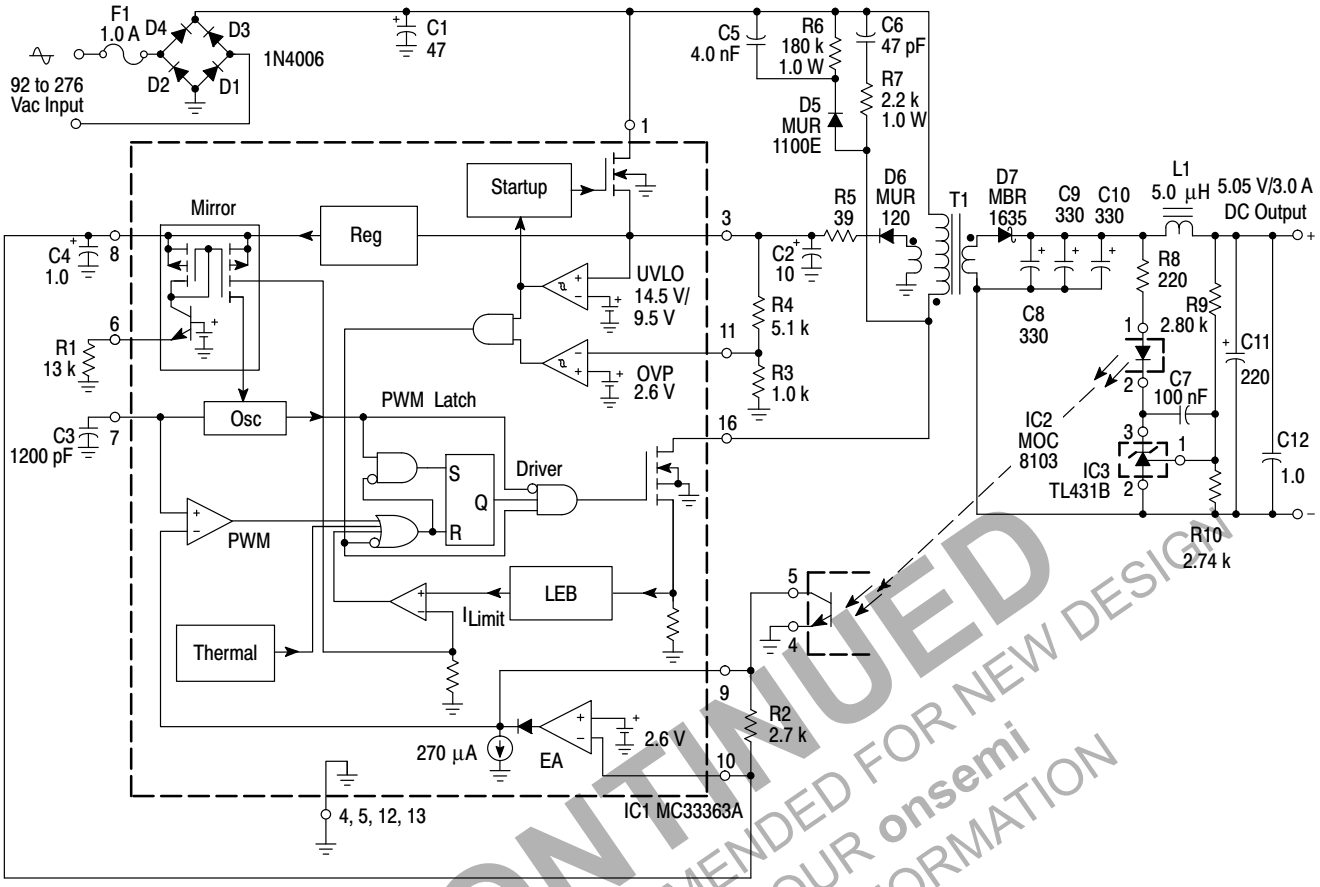

Figure 22. 15 W Off−Line Converter

DISCONTINUED
THIS DEVICE IS NOT RECOMMENDED FOR NEW DESIGN
PLEASE CONTACT YOUR onsemi
REPRESENTATIVE FOR INFORMATION

Table 1. CONVERTER TEST DATA

Test	Conditions	Results
Line Regulation	V_{in} = 92 Vac to 276 Vac, I_O 3.0 A	Δ = 1.0 mV
Load Regulation	V_{in} = 115 Vac, I_O = 0.75 A to 3.0 A	Δ = 5.0 mV
	V_{in} = 230 Vac, I_O = 0.75 A to 3.0 A	Δ = 5.0 mV
Output Ripple	V_{in} = 115 Vac, I_O = 3.0 A	Triangular = 2.0 mVpp, Spike = 32 mVpp
	V_{in} = 230 Vac, I_O = 3.0 A	Triangular = 2.0 mVpp, Spike = 34 mVpp
Efficiency	V_{in} = 115 Vac, I_O = 3.0 A	76.8%*
	V_{in} = 230 Vac, I_O = 3.0 A	76.8%

This data was taken with the components listed below mounted on the printed circuit board shown in Figure 23.
*With MBR2535CTL, 78.8% efficiency. PCB layout modification is required to use this rectifier.
For high efficiency and small circuit board size, the Sanyo Os−Con capacitors are recommended for C8, C9, C10 and C11.
C8, C9, C10 = Sanyo Os−Con #6SA330M, 330 µF 6.3 V.
C11 = Sanyo Os−Con #10SA220M, 220 µF 10 V.
L1 = Coilcraft S5088−A, 5.0 µH, 0.11 Ω.
T1 = Coilcraft U6875−A
Primary: 77 turns of # 28 AWG, Pin 1 = start, Pin 8 = finish.
Two layers 0.002″ Mylar tape.
Secondary: 5 turns of # 22 AWG, 2 strands bifiliar wound, Pin 5 = start, Pin 4 = finish.
Two layers 0.002″ Mylar tape.
Auxiliary: 13 turns of # 28 AWG wound in center of bobbin, Pin 2 = start, Pin 7 = finish.
Two layers 0.002″ Mylar tape.
Gap: 0.011″ total for a primary inductance (L_P) of 620 µH.
Core and Bobbin: Coilcraft PT1950, E187, 3F3 material.

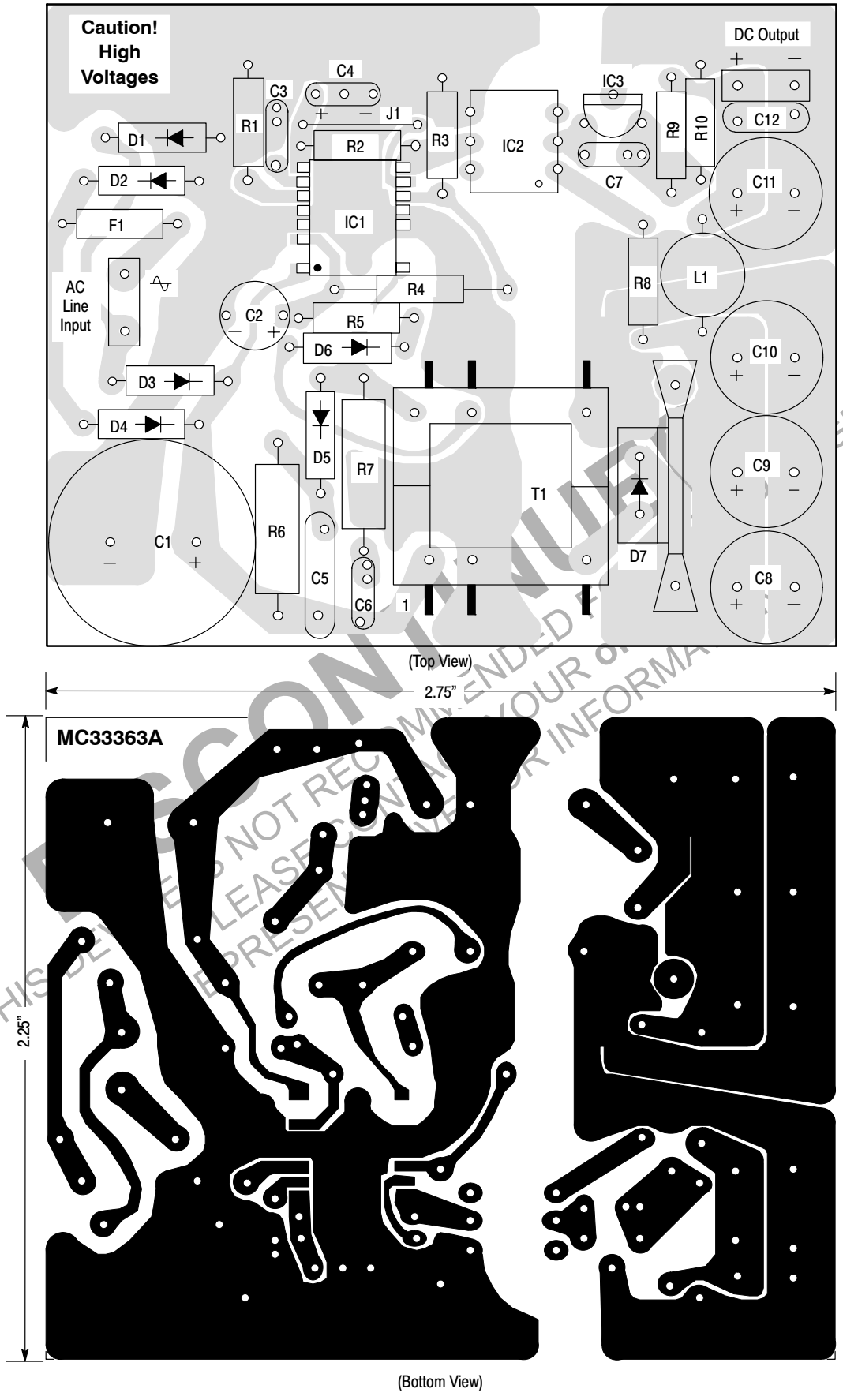

Figure 23. Printed Circuit Board and Component Layout (Circuit of Figure 22)

DISCONTINUED
THIS DEVICE IS NOT RECOMMENDED FOR NEW DESIGN
PLEASE CONTACT YOUR onsemi
REPRESENTATIVE FOR INFORMATION

SENSEFET is a registered trademark of Semiconductor Components Industries, LLC (SCILLC).

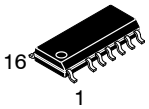

SCALE 1:1

SOIC−16 MINUS PINS, 2, 14, 15
CASE 751N−01
ISSUE O

DATE 02/28/95

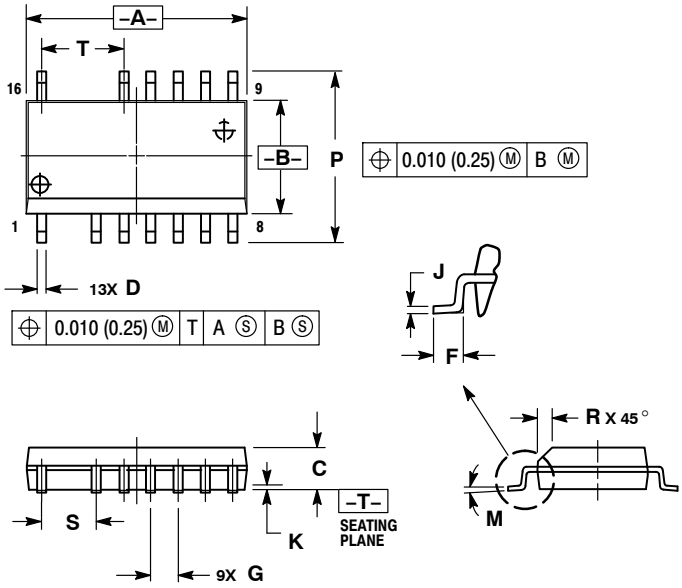

NOTES:
1. DIMENSIONING AND TOLERANCING PER ANSI Y14.5M, 1982.
2. CONTROLLING DIMENSION: MILLIMETER.
3. DIMENSIONS A AND B DO NOT INCLUDE MOLD PROTRUSION.
4. MAXIMUM MOLD PROTRUSION 0.15 (0.006) PER SIDE.
5. DIMENSION D DOES NOT INCLUDE DAMBAR PROTRUSION. ALLOWABLE DAMBAR PROTRUSION SHALL BE 0.13 (0.005) TOTAL IN EXCESS OF D DIMENSION AT MAXIMUM MATERIAL CONDITION.

	MILLIMETERS		INCHES	
DIM	MIN	MAX	MIN	MAX
A	10.15	10.45	0.400	0.411
B	7.40	7.60	0.292	0.299
C	2.35	2.65	0.093	0.104
D	0.35	0.49	0.014	0.019
F	0.50	0.90	0.020	0.035
G	1.27 BSC		0.050 BSC	
J	0.25	0.32	0.010	0.012
K	0.10	0.25	0.004	0.009
M	0°	7°	0°	7°
P	10.05	10.55	0.395	0.415
R	0.25	0.75	0.010	0.029
S	2.54 BSC		0.100 BSC	
T	3.81 BSC		0.150 BSC	

DOCUMENT NUMBER:	**98ASH70300A**	Electronic versions are uncontrolled except when accessed directly from the Document Repository. Printed versions are uncontrolled except when stamped "CONTROLLED COPY" in red.	
DESCRIPTION:	**SOIC−16 MINUS PINS, 2, 14, 15**		**PAGE 1 OF 1**

ON Semiconductor and ON are trademarks of Semiconductor Components Industries, LLC dba ON Semiconductor or its subsidiaries in the United States and/or other countries. ON Semiconductor reserves the right to make changes without further notice to any products herein. ON Semiconductor makes no warranty, representation or guarantee regarding the suitability of its products for any particular purpose, nor does ON Semiconductor assume any liability arising out of the application or use of any product or circuit, and specifically disclaims any and all liability, including without limitation special, consequential or incidental damages. ON Semiconductor does not convey any license under its patent rights nor the rights of others.

© Semiconductor Components Industries, LLC, 2019

onsemi, , and other names, marks, and brands are registered and/or common law trademarks of Semiconductor Components Industries, LLC dba "**onsemi**" or its affiliates and/or subsidiaries in the United States and/or other countries. **onsemi** owns the rights to a number of patents, trademarks, copyrights, trade secrets, and other intellectual property. A listing of **onsemi**'s product/patent coverage may be accessed at www.onsemi.com/site/pdf/Patent−Marking.pdf. **onsemi** reserves the right to make changes at any time to any products or information herein, without notice. The information herein is provided "as−is" and **onsemi** makes no warranty, representation or guarantee regarding the accuracy of the information, product features, availability, functionality, or suitability of its products for any particular purpose, nor does **onsemi** assume any liability arising out of the application or use of any product or circuit, and specifically disclaims any and all liability, including without limitation special, consequential or incidental damages. Buyer is responsible for its products and applications using **onsemi** products, including compliance with all laws, regulations and safety requirements or standards, regardless of any support or applications information provided by **onsemi**. "Typical" parameters which may be provided in **onsemi** data sheets and/or specifications can and do vary in different applications and actual performance may vary over time. All operating parameters, including "Typicals" must be validated for each customer application by customer's technical experts. **onsemi** does not convey any license under any of its intellectual property rights nor the rights of others. **onsemi** products are not designed, intended, or authorized for use as a critical component in life support systems or any FDA Class 3 medical devices or medical devices with a same or similar classification in a foreign jurisdiction or any devices intended for implantation in the human body. Should Buyer purchase or use **onsemi** products for any such unintended or unauthorized application, Buyer shall indemnify and hold **onsemi** and its officers, employees, subsidiaries, affiliates, and distributors harmless against all claims, costs, damages, and expenses, and reasonable attorney fees arising out of, directly or indirectly, any claim of personal injury or death associated with such unintended or unauthorized use, even if such claim alleges that **onsemi** was negligent regarding the design or manufacture of the part. **onsemi** is an Equal Opportunity/Affirmative Action Employer. This literature is subject to all applicable copyright laws and is not for resale in any manner.

ADDITIONAL INFORMATION

TECHNICAL PUBLICATIONS:
Technical Library: www.onsemi.com/design/resources/technical−documentation
onsemi Website: www.onsemi.com

ONLINE SUPPORT: www.onsemi.com/support
For additional information, please contact your local Sales Representative at www.onsemi.com/support/sales