Octal Bidirectional Transceiver with 3-State Inputs/Outputs

MC74AC245, MC74ACT245

The MC74AC245/74ACT245 contains eight non−inverting bidirectional buffers with 3−state outputs and is intended for bus−oriented applications. Current sinking capability is 24 mA at both the A and B ports. The Transmit/Receive (T/$\overline{R}$) input determines the direction of data flow through the bidirectional transceiver. Transmit (active−HIGH) enables data from A ports to B ports; Receive (active−LOW) enables data from B ports to A ports. The Output Enable input, when HIGH, disables both A and B ports by placing them in a High Z condition.

Features

- Noninverting Buffers
- Bidirectional Data Path
- A and B Outputs Source/Sink 24 mA
- ′ACT245 has TTL Compatible Inputs
- These are Pb−Free Devices

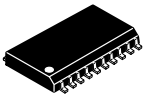

1

SOIC−20W
DW SUFFIX
CASE 751D

MARKING DIAGRAMS

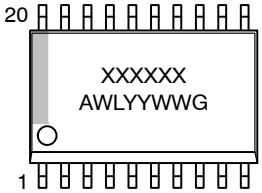

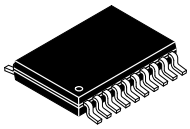

1

TSSOP−20
DT SUFFIX
CASE 948E

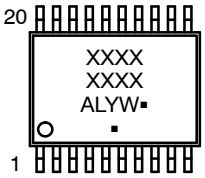

XXXXXX = Specific Device Code
A = Assembly Location
WL, L = Wafer Lot
YY, Y = Year
WW, W = Work Week
G or ▪ = Pb−Free Package
(Note: Microdot may be in either location)

ORDERING INFORMATION

See detailed ordering and shipping information in the package dimensions section on page 6 of this data sheet.

PIN ASSIGNMENT

PIN	FUNCTION
$\overline{OE}$	Output Enable Input
T/$\overline{R}$	Transmit/Receive Input
A_0−A_7	Side A 3−State Inputs or 3−State Outputs
B_0−B_7	Side B 3−State Inputs or 3−State Outputs

TRUTH TABLES

Inputs		Outputs
$\overline{OE}$	T/$\overline{R}$	
L	L	Bus B Data to Bus A
L	H	Bus A Data to Bus B
H	X	High Z State

H = HIGH Voltage Level
L = LOW Voltage Level
X = Immaterial

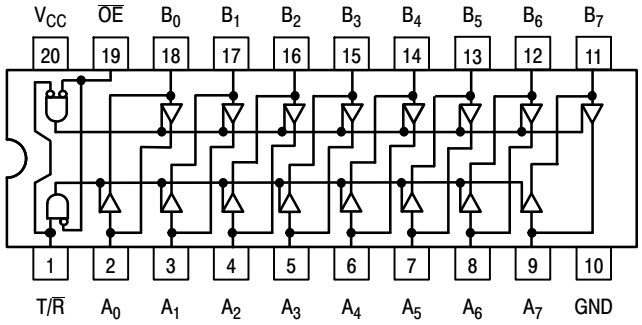

Figure 1.

© Semiconductor Components Industries, LLC, 2015

MAXIMUM RATINGS

Symbol	Parameter		Value	Unit
V_{CC}	DC Supply Voltage (Referenced to GND)		−0.5 to +6.5	V
V_{IN}	DC Input Voltage (Referenced to GND)		−0.5 to V_{CC} +0.5	V
V_{OUT}	DC Output Voltage (Referenced to GND) (Note 1)		−0.5 to V_{CC} +0.5	V
I_{IK}	DC Input Diode Current		±20	mA
I_{OK}	DC Output Diode Current		±50	mA
I_{OUT}	DC Output Sink/Source Current		±50	mA
I_{CC}	DC Supply Current, per Output Pin		±50	mA
I_{GND}	DC Ground Current, per Output Pin		±100	mA
T_{STG}	Storage Temperature Range		−65 to +150	°C
T_L	Lead temperature, 1 mm from Case for 10 Seconds		260	°C
T_J	Junction Temperature Under Bias		140	°C
θ_{JA}	Thermal Resistance (Note 2)	SOIC TSSOP	96 150	°C/W
MSL	Moisture Sensitivity		Level 1	
F_R	Flammability Rating	Oxygen Index: 30% − 35%	UL 94 V−0 @ 0.125 in	
V_{ESD}	ESD Withstand Voltage	Human Body Model (Note 3) Charged Device Model (Note 4)	> 2000 > 1000	V
$I_{Latchup}$	Latchup Performance	Above V_{CC} and Below GND at 85°C (Note 5)	±100	mA

Stresses exceeding those listed in the Maximum Ratings table may damage the device. If any of these limits are exceeded, device functionality should not be assumed, damage may occur and reliability may be affected.

1. I_{OUT} absolute maximum rating must be observed.
2. The package thermal impedance is calculated in accordance with JESD 51−7.
3. Tested to EIA/JESD22−A114−A.
4. Tested to JESD22−C101−A.
5. Tested to EIA/JESD78.

RECOMMENDED OPERATING CONDITIONS

Symbol	Parameter		Min	Typ	Max	Unit
V_{CC}	Supply Voltage	′AC	2.0	5.0	6.0	V
		′ACT	4.5	5.0	5.5	
V_{IN}, V_{OUT}	DC Input Voltage, Output Voltage (Ref. to GND)		0	–	V_{CC}	V
t_r, t_f	Input Rise and Fall Time (Note 6) ′AC Devices except Schmitt Inputs	V_{CC} @ 3.0 V	–	150	–	ns/V
		V_{CC} @ 4.5 V	–	40	–	
		V_{CC} @ 5.5 V	–	25	–	
t_r, t_f	Input Rise and Fall Time (Note 7) ′ACT Devices except Schmitt Inputs	V_{CC} @ 4.5 V	–	10	–	ns/V
		V_{CC} @ 5.5 V	–	8.0	–	
T_A	Operating Ambient Temperature Range		−40	25	85	°C
I_{OH}	Output Current − High		–	–	−24	mA
I_{OL}	Output Current − Low		–	–	24	mA

Functional operation above the stresses listed in the Recommended Operating Ranges is not implied. Extended exposure to stresses beyond the Recommended Operating Ranges limits may affect device reliability.

6. V_{IN} from 30% to 70% V_{CC}; see individual Data Sheets for devices that differ from the typical input rise and fall times.
7. V_{IN} from 0.8 V to 2.0 V; see individual Data Sheets for devices that differ from the typical input rise and fall times.

DC CHARACTERISTICS

Symbol	Parameter	V_{CC} (V)	74AC		74AC	Unit	Conditions
			T_A = +25°C		T_A = –40°C to +85°C		
			Typ	Guaranteed Limits			
V_{IH}	Minimum High Level Input Voltage	3.0 4.5 5.5	1.5 2.25 2.75	2.1 3.15 3.85	2.1 3.15 3.85	V	V_{OUT} = 0.1 V or V_{CC} – 0.1 V
V_{IL}	Maximum Low Level Input Voltage	3.0 4.5 5.5	1.5 2.25 2.75	0.9 1.35 1.65	0.9 1.35 1.65	V	V_{OUT} = 0.1 V or V_{CC} – 0.1 V
V_{OH}	Minimum High Level Output Voltage	3.0 4.5 5.5	2.99 4.49 5.49	2.9 4.4 5.4	2.9 4.4 5.4	V	I_{OUT} = –50 μA
		3.0 4.5 5.5	– – –	2.56 3.86 4.86	2.46 3.76 4.76	V	*V_{IN} = V_{IL} or V_{IH} –12 mA I_{OH} –24 mA –24 mA
V_{OL}	Maximum Low Level Output Voltage	3.0 4.5 5.5	0.002 0.001 0.001	0.1 0.1 0.1	0.1 0.1 0.1	V	I_{OUT} = 50 μA
		3.0 4.5 5.5	– – –	0.36 0.36 0.36	0.44 0.44 0.44	V	*V_{IN} = V_{IL} or V_{IH} 12 mA I_{OL} 24 mA 24 mA
I_{IN}	Maximum Input Leakage Current	5.5	–	±0.1	±1.0	μA	V_I = V_{CC}, GND
I_{OZT}	Maximum 3-State Current	5.5	–	±0.6	±6.0	μA	V_I (OE) = V_{IL}, V_{IH} V_I = V_{CC}, GND V_O = V_{CC}, GND
I_{OLD}	†Minimum Dynamic Output Current	5.5	–	–	75	mA	V_{OLD} = 1.65 V Max
I_{OHD}		5.5	–	–	–75	mA	V_{OHD} = 3.85 V Min
I_{CC}	Maximum Quiescent Supply Current	5.5	–	8.0	80.0	μA	V_{IN} = V_{CC} or GND

*All outputs loaded; thresholds on input associated with output under test.
†Maximum test duration 2.0 ms, one output loaded at a time.
NOTE: I_{IN} and I_{CC} @ 3.0 V are guaranteed to be less than or equal to the respective limit @ 5.5 V V_{CC}.

AC CHARACTERISTICS (For Figures and Waveforms − See AND8277/D at www.onsemi.com)

Symbol	Parameter	V_{CC}* (V)	74AC T_A = +25°C C_L = 50 pF			74AC T_A = −40°C to +85°C C_L = 50 pF		Unit	Fig. No.
			Min	Typ	Max	Min	Max		
t_{PLH}	Propagation Delay A_n to B_n or B_n to A_n	3.3 5.0	1.5 1.5	5.0 3.5	8.5 6.5	1.0 1.0	9.0 7.0	ns	3–5
t_{PHL}	Propagation Delay A_n to B_n or B_n to A_n	3.3 5.0	1.5 1.5	5.0 3.5	8.5 6.0	1.0 1.0	9.0 7.0	ns	3–5
t_{PZH}	Output Enable Time	3.3 5.0	2.5 1.5	7.0 5.0	11.5 8.5	2.0 1.0	12.5 9.0	ns	3–7
t_{PZL}	Output Enable Time	3.3 5.0	2.5 1.5	7.5 5.5	12.0 9.0	2.0 1.0	13.5 9.5	ns	3–8
t_{PHZ}	Output Disable Time	3.3 5.0	2.0 1.5	6.5 5.5	12.0 9.0	1.0 1.0	12.5 10.0	ns	3–7
t_{PLZ}	Output Disable Time	3.3 5.0	2.0 1.5	7.0 5.5	11.5 9.0	1.5 1.0	13.0 10.0	ns	3–8

*Voltage Range 3.3 V is 3.3 V ±0.3 V.
Voltage Range 5.0 V is 5.0 V ±0.5 V.

DC CHARACTERISTICS

Symbol	Parameter	V_{CC} (V)	74ACT T_A = +25°C		74ACT T_A = −40°C to +85°C	Unit	Conditions
			Typ	Guaranteed Limits			
V_{IH}	Minimum High Level Input Voltage	4.5 5.5	1.5 1.5	2.0 2.0	2.0 2.0	V	V_{OUT} = 0.1 V or V_{CC} − 0.1 V
V_{IL}	Maximum Low Level Input Voltage	4.5 5.5	1.5 1.5	0.8 0.8	0.8 0.8	V	V_{OUT} = 0.1 V or V_{CC} − 0.1 V
V_{OH}	Minimum High Level Output Voltage	4.5 5.5	4.49 5.49	4.4 5.4	4.4 5.4	V	I_{OUT} = −50 μA
		4.5 5.5	− −	3.86 4.86	3.76 4.76	V	*V_{IN} = V_{IL} or V_{IH} I_{OH} −24 mA −24 mA
V_{OL}	Maximum Low Level Output Voltage	4.5 5.5	0.001 0.001	0.1 0.1	0.1 0.1	V	I_{OUT} = 50 μA
		4.5 5.5	− −	0.36 0.36	0.44 0.44	V	*V_{IN} = V_{IL} or V_{IH} I_{OL} 24 mA 24 mA
I_{IN}	Maximum Input Leakage Current	5.5	−	±0.1	±1.0	μA	V_I = V_{CC}, GND
ΔI_{CCT}	Additional Max. I_{CC}/Input	5.5	0.6	−	1.5	mA	V_I = V_{CC} − 2.1 V
I_{OZT}	Maximum 3−State Current	5.5	−	±0.6	±6.0	μA	V_I (OE) = V_{IL}, V_{IH} V_I = V_{CC}, GND V_O = V_{CC}, GND
I_{OLD}	†Minimum Dynamic Output Current	5.5	−	−	75	mA	V_{OLD} = 1.65 V Max
I_{OHD}		5.5	−	−	−75	mA	V_{OHD} = 3.85 V Min
I_{CC}	Maximum Quiescent Supply Current	5.5	−	8.0	80.0	μA	V_{IN} = V_{CC} or GND

*All outputs loaded; thresholds on input associated with output under test.
†Maximum test duration 2.0 ms, one output loaded at a time.

AC CHARACTERISTICS (For Figures and Waveforms − See AND8277/D at www.onsemi.com)

Symbol	Parameter	V_{CC}* (V)	74ACT T_A = +25°C C_L = 50 pF			74ACT T_A = −40°C to +85°C C_L = 50 pF		Unit	Fig. No.
			Min	Typ	Max	Min	Max		
t_{PLH}	Propagation Delay, A_n to B_n or B_n to A_n	5.0	1.5	4.0	7.5	1.5	8.0	ns	3–5
t_{PHL}	Propagation Delay, A_n to B_n or B_n to A_n	5.0	1.5	4.0	8.0	1.0	9.0	ns	3–5
t_{PZH}	Output Enable Time	5.0	1.5	5.0	10	1.5	11.0	ns	3–7
t_{PZL}	Output Enable Time	5.0	1.5	5.5	10	1.5	12.0	ns	3–8
t_{PHZ}	Output Disable Time	5.0	1.5	5.5	10	1.0	11.0	ns	3–7
t_{PLZ}	Output Disable Time	5.0	2.0	5.0	10	1.5	11.0	ns	3–8

*Voltage Range 5.0 V is 5.0 V ±0.5 V.

CAPACITANCE

Symbol	Parameter	Value Typ	Unit	Test Conditions
C_{IN}	Input Capacitance	4.5	pF	V_{CC} = 5.0 V
$C_{I/O}$	Input/Output Capacitance	15	pF	V_{CC} = 5.0 V
C_{PD}	Power Dissipation Capacitance	45	pF	V_{CC} = 5.0 V

ORDERING INFORMATION

Device	Marking	Package	Shipping†
MC74AC245DWG	AC245	SOIC−20	38 Units / Rail
MC74AC245DWR2G	AC245	SOIC−20	1000 / Tape & Reel
MC74ACT245DWG	ACT245	SOIC−20	38 Units / Rail
MC74ACT245DWR2G	ACT245	SOIC−20	1000 / Tape & Reel
MC74AC245DTG	AC 245	TSSOP−20	75 Units / Rail
MC74AC245DTR2G	AC 245	TSSOP−20	2500 / Tape & Reel
MC74ACT245DTR2G	ACT 245	TSSOP−20	2500 / Tape & Reel

†For information on tape and reel specifications, including part orientation and tape sizes, please refer to our Tape and Reel Packaging Specifications Brochure, BRD8011/D.

MECHANICAL CASE OUTLINE
PACKAGE DIMENSIONS

SOIC−20 WB
CASE 751D−05
ISSUE H

DATE 22 APR 2015

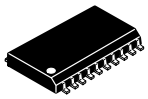

SCALE 1:1

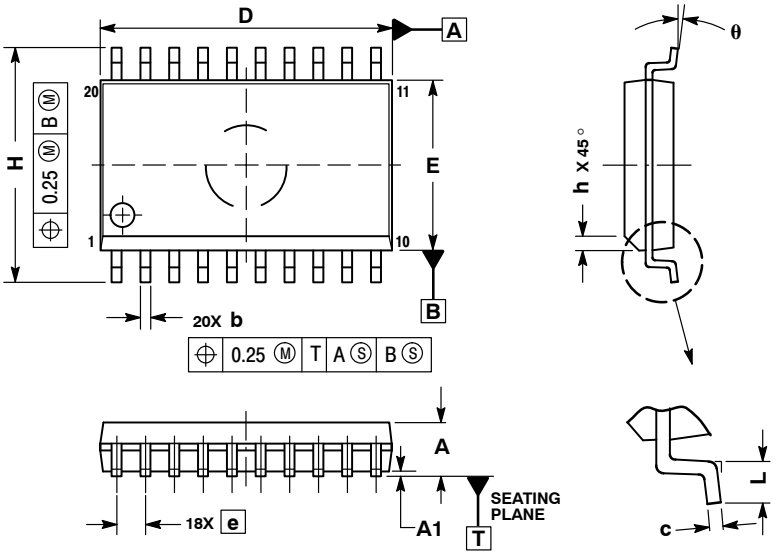

NOTES:
1. DIMENSIONS ARE IN MILLIMETERS.
2. INTERPRET DIMENSIONS AND TOLERANCES PER ASME Y14.5M, 1994.
3. DIMENSIONS D AND E DO NOT INCLUDE MOLD PROTRUSION.
4. MAXIMUM MOLD PROTRUSION 0.15 PER SIDE.
5. DIMENSION B DOES NOT INCLUDE DAMBAR PROTRUSION. ALLOWABLE PROTRUSION SHALL BE 0.13 TOTAL IN EXCESS OF B DIMENSION AT MAXIMUM MATERIAL CONDITION.

	MILLIMETERS	
DIM	MIN	MAX
A	2.35	2.65
A1	0.10	0.25
b	0.35	0.49
c	0.23	0.32
D	12.65	12.95
E	7.40	7.60
e	1.27 BSC	
H	10.05	10.55
h	0.25	0.75
L	0.50	0.90
θ	0°	7°

RECOMMENDED SOLDERING FOOTPRINT*

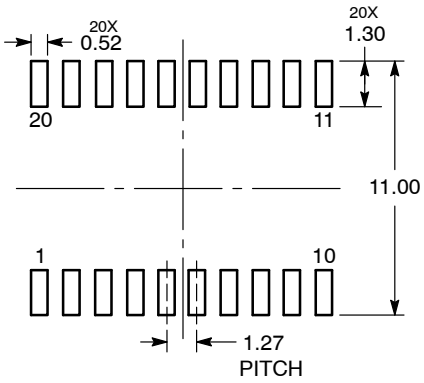

DIMENSIONS: MILLIMETERS

*For additional information on our Pb−Free strategy and soldering details, please download the ON Semiconductor Soldering and Mounting Techniques Reference Manual, SOLDERRM/D.

GENERIC MARKING DIAGRAM*

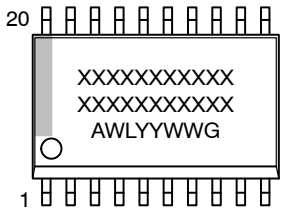

XXXXX = Specific Device Code
A = Assembly Location
WL = Wafer Lot
YY = Year
WW = Work Week
G = Pb−Free Package

*This information is generic. Please refer to device data sheet for actual part marking. Pb−Free indicator, “G” or microdot “▪”, may or may not be present. Some products may not follow the Generic Marking.

DOCUMENT NUMBER:	**98ASB42343B**	Electronic versions are uncontrolled except when accessed directly from the Document Repository. Printed versions are uncontrolled except when stamped “CONTROLLED COPY” in red.
DESCRIPTION:	**SOIC−20 WB**	**PAGE 1 OF 1**

onsemi and ONSEMI. are trademarks of Semiconductor Components Industries, LLC dba **onsemi** or its subsidiaries in the United States and/or other countries. **onsemi** reserves the right to make changes without further notice to any products herein. **onsemi** makes no warranty, representation or guarantee regarding the suitability of its products for any particular purpose, nor does **onsemi** assume any liability arising out of the application or use of any product or circuit, and specifically disclaims any and all liability, including without limitation special, consequential or incidental damages. **onsemi** does not convey any license under its patent rights nor the rights of others.

© Semiconductor Components Industries, LLC, 2019

MECHANICAL CASE OUTLINE
PACKAGE DIMENSIONS

ON Semiconductor®

TSSOP−20 WB
CASE 948E
ISSUE D

DATE 17 FEB 2016

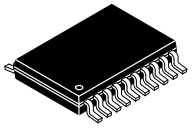

SCALE 2:1

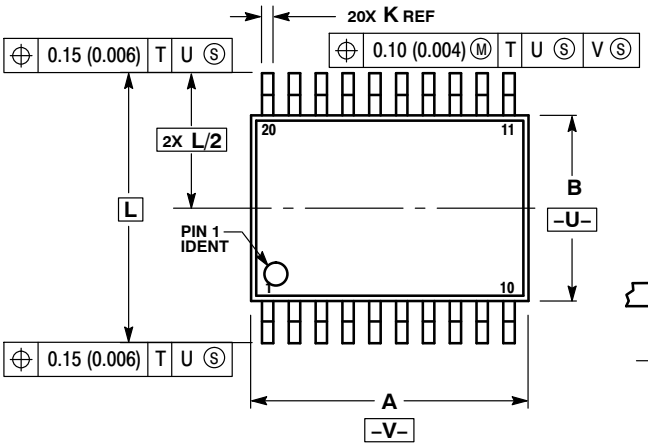

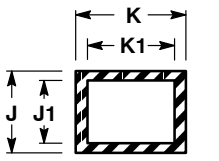

SECTION N−N

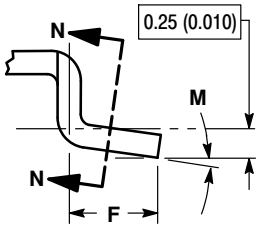

DETAIL E

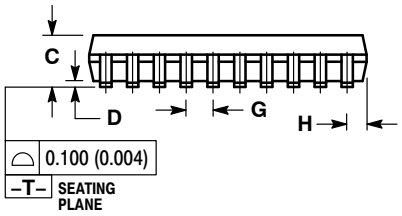

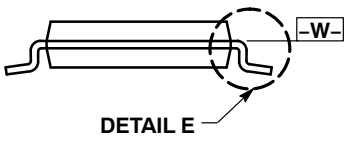

NOTES:
1. DIMENSIONING AND TOLERANCING PER ANSI Y14.5M, 1982.
2. CONTROLLING DIMENSION: MILLIMETER.
3. DIMENSION A DOES NOT INCLUDE MOLD FLASH, PROTRUSIONS OR GATE BURRS. MOLD FLASH OR GATE BURRS SHALL NOT EXCEED 0.15 (0.006) PER SIDE.
4. DIMENSION B DOES NOT INCLUDE INTERLEAD FLASH OR PROTRUSION. INTERLEAD FLASH OR PROTRUSION SHALL NOT EXCEED 0.25 (0.010) PER SIDE.
5. DIMENSION K DOES NOT INCLUDE DAMBAR PROTRUSION. ALLOWABLE DAMBAR PROTRUSION SHALL BE 0.08 (0.003) TOTAL IN EXCESS OF THE K DIMENSION AT MAXIMUM MATERIAL CONDITION.
6. TERMINAL NUMBERS ARE SHOWN FOR REFERENCE ONLY.
7. DIMENSION A AND B ARE TO BE DETERMINED AT DATUM PLANE −W−.

	MILLIMETERS		INCHES	
DIM	MIN	MAX	MIN	MAX
A	6.40	6.60	0.252	0.260
B	4.30	4.50	0.169	0.177
C	---	1.20	---	0.047
D	0.05	0.15	0.002	0.006
F	0.50	0.75	0.020	0.030
G	0.65 BSC		0.026 BSC	
H	0.27	0.37	0.011	0.015
J	0.09	0.20	0.004	0.008
J1	0.09	0.16	0.004	0.006
K	0.19	0.30	0.007	0.012
K1	0.19	0.25	0.007	0.010
L	6.40 BSC		0.252 BSC	
M	0°	8°	0°	8°

SOLDERING FOOTPRINT

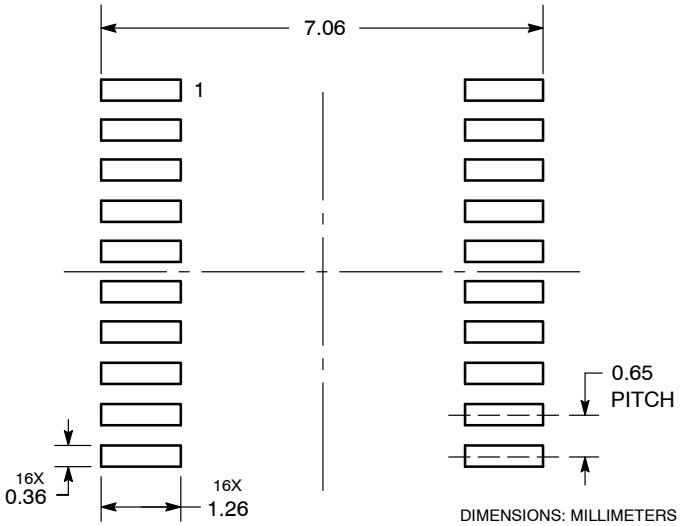

DIMENSIONS: MILLIMETERS

GENERIC MARKING DIAGRAM*

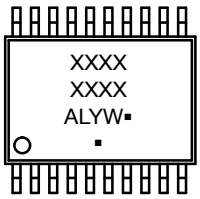

A = Assembly Location
L = Wafer Lot
Y = Year
W = Work Week
▪ = Pb−Free Package

(Note: Microdot may be in either location)

*This information is generic. Please refer to device data sheet for actual part marking. Pb−Free indicator, “G” or microdot “ ▪”, may or may not be present.

DOCUMENT NUMBER:	98ASH70169A	Electronic versions are uncontrolled except when accessed directly from the Document Repository. Printed versions are uncontrolled except when stamped “CONTROLLED COPY” in red.
DESCRIPTION:	TSSOP−20 WB	PAGE 1 OF 1

ON Semiconductor and ON are trademarks of Semiconductor Components Industries, LLC dba ON Semiconductor or its subsidiaries in the United States and/or other countries. ON Semiconductor reserves the right to make changes without further notice to any products herein. ON Semiconductor makes no warranty, representation or guarantee regarding the suitability of its products for any particular purpose, nor does ON Semiconductor assume any liability arising out of the application or use of any product or circuit, and specifically disclaims any and all liability, including without limitation special, consequential or incidental damages. ON Semiconductor does not convey any license under its patent rights nor the rights of others.

© Semiconductor Components Industries, LLC, 2019

onsemi, , and other names, marks, and brands are registered and/or common law trademarks of Semiconductor Components Industries, LLC dba "**onsemi**" or its affiliates and/or subsidiaries in the United States and/or other countries. **onsemi** owns the rights to a number of patents, trademarks, copyrights, trade secrets, and other intellectual property. A listing of **onsemi**'s product/patent coverage may be accessed at www.onsemi.com/site/pdf/Patent−Marking.pdf. **onsemi** reserves the right to make changes at any time to any products or information herein, without notice. The information herein is provided "as−is" and **onsemi** makes no warranty, representation or guarantee regarding the accuracy of the information, product features, availability, functionality, or suitability of its products for any particular purpose, nor does **onsemi** assume any liability arising out of the application or use of any product or circuit, and specifically disclaims any and all liability, including without limitation special, consequential or incidental damages. Buyer is responsible for its products and applications using **onsemi** products, including compliance with all laws, regulations and safety requirements or standards, regardless of any support or applications information provided by **onsemi**. "Typical" parameters which may be provided in **onsemi** data sheets and/or specifications can and do vary in different applications and actual performance may vary over time. All operating parameters, including "Typicals" must be validated for each customer application by customer's technical experts. **onsemi** does not convey any license under any of its intellectual property rights nor the rights of others. **onsemi** products are not designed, intended, or authorized for use as a critical component in life support systems or any FDA Class 3 medical devices or medical devices with a same or similar classification in a foreign jurisdiction or any devices intended for implantation in the human body. Should Buyer purchase or use **onsemi** products for any such unintended or unauthorized application, Buyer shall indemnify and hold **onsemi** and its officers, employees, subsidiaries, affiliates, and distributors harmless against all claims, costs, damages, and expenses, and reasonable attorney fees arising out of, directly or indirectly, any claim of personal injury or death associated with such unintended or unauthorized use, even if such claim alleges that **onsemi** was negligent regarding the design or manufacture of the part. **onsemi** is an Equal Opportunity/Affirmative Action Employer. This literature is subject to all applicable copyright laws and is not for resale in any manner.

ADDITIONAL INFORMATION

TECHNICAL PUBLICATIONS:
Technical Library: www.onsemi.com/design/resources/technical−documentation
onsemi Website: www.onsemi.com

ONLINE SUPPORT: www.onsemi.com/support
For additional information, please contact your local Sales Representative at www.onsemi.com/support/sales