8-Input Data Selector/Multiplexer

MC74HC151A

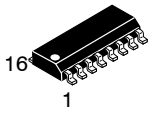

SOIC−16
D SUFFIX
CASE 751B

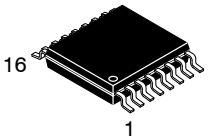

TSSOP−16
DT SUFFIX
CASE 948F



QFN16
MN SUFFIX
CASE 485AW

The MC74HC151A is identical in pinout to the LS151. The device inputs are compatible with standard CMOS outputs; with pullup resistors, they are compatible with LSTTL outputs.

This device selects one of the eight binary Data Inputs, as determined by the Address Inputs. The Strobe pin must be at a low level for the selected data to appear at the outputs. If Strobe is high, the Y output is forced to a low level and the $\overline{Y}$ output is forced to a high level.

The HC151A is similar in function to the HC251 which has 3−state outputs.

Features

- Output Drive Capability: 10 LSTTL Loads
- Outputs Directly Interface to CMOS, NMOS, and TTL
- Operating Voltage Range: 2.0 to 6.0 V
- Low Input Current: 1 μA
- High Noise Immunity Characteristic of CMOS Devices
- In Compliance with the Requirements Defined by JEDEC Standard No. 7A
- Chip Complexity: 328 FETs or 82 Equivalent Gates
- −Q Suffix for Automotive and Other Applications Requiring Unique Site and Control Change Requirements; AEC−Q100 Qualified and PPAP Capable
- These Devices are Pb−Free, Halogen Free/BFR Free and are RoHS Compliant

MARKING DIAGRAMS

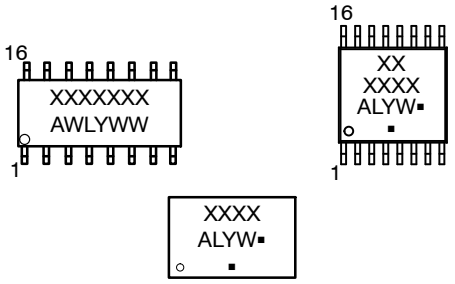

A	=	Assembly Location
WL, L	=	Wafer Lot
YY, Y	=	Year
WW, W	=	Work Week
G or ▪	=	Pb−Free Package

(Note: Microdot may be in either location)

ORDERING INFORMATION

See detailed ordering and shipping information on page 8 of this data sheet.

© Semiconductor Components Industries, LLC, 2015

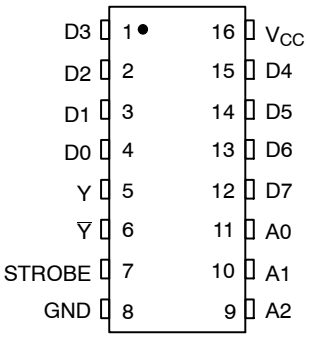

Figure 1. Pin Assignment

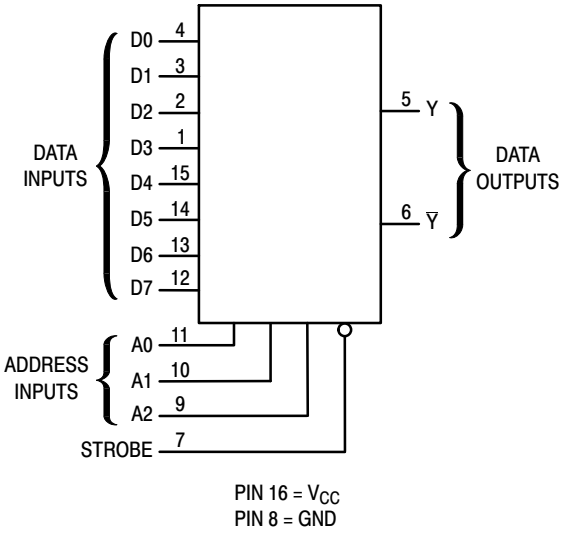

Figure 2. Logic Diagram

FUNCTION TABLE

Inputs				Outputs	
A2	**A1**	**A0**	**Strobe**	**Y**	**$\overline{Y}$**
X	X	X	H	L	H
L	L	L	L	D0	$\overline{D0}$
L	L	H	L	D1	$\overline{D1}$
L	H	L	L	D2	$\overline{D2}$
L	H	H	L	D3	$\overline{D3}$
H	L	L	L	D4	$\overline{D4}$
H	L	H	L	D5	$\overline{D5}$
H	H	L	L	D6	$\overline{D6}$
H	H	H	L	D7	$\overline{D7}$

D0, D1, …, D7 = the level of the respective D input.

MAXIMUM RATINGS

Symbol	Parameter		Value	Unit
V_{CC}	DC Supply Voltage		–0.5 to +6.5	V
V_{IN}	DC Input Voltage		–0.5 to V_{CC} + 0.5	V
V_{OUT}	DC Output Voltage		–0.5 to V_{CC} + 0.5	V
I_{IN}	DC Input Current, per Pin		±20	mA
I_{OUT}	DC Output Current, per Pin		±25	mA
I_{CC}	DC Supply Current, V_{CC} and GND Pins		±50	mA
I_{IK}	Input Clamp Current (V_{IN} < 0 or V_{IN} > V_{CC})		±20	mA
I_{OK}	Output Clamp Current (V_{OUT} < 0 or V_{OUT} > V_{CC})		±20	mA
T_{STG}	Storage Temperature		–65 to +150	°C
T_L	Lead Temperature, 1 mm from Case for 10 Seconds		260	°C
T_J	Junction Temperature Under Bias		±150	°C
θ_{JA}	Thermal Resistance (Note 1)	SOIC–16 QFN16 TSSOP–16	126 118 159	°C/W
P_D	Power Dissipation in Still Air at 25°C	SOIC–16 QFN16 TSSOP–16	995 1062 787	mW
MSL	Moisture Sensitivity		Level 1	–
F_R	Flammability Rating	Oxygen Index: 28 to 34	UL 94 V–0 @ 0.125 in	–
V_{ESD}	ESD Withstand Voltage (Note 2)	Human Body Model Charged Device Model	2000 N/A	V

Stresses exceeding those listed in the Maximum Ratings table may damage the device. If any of these limits are exceeded, device functionality should not be assumed, damage may occur and reliability may be affected.

1. Measured with minimum pad spacing on an FR4 board, using 76 mm–by–114 mm, 2–ounce copper trace no air flow per JESD51–7.
2. HBM tested to EIA / JESD22–A114–A. CDM tested to JESD22–C101–A. JEDEC recommends that ESD qualification to EIA/JESD22–A115A (Machine Model) be discontinued.

RECOMMENDED OPERATING CONDITIONS

Symbol	Parameter		Min	Max	Unit
V_{CC}	DC Supply Voltage		2.0	6.0	V
V_{IN}, V_{OUT}	DC Input Voltage, Output Voltage (Note 3)		0	V_{CC}	V
T_A	Operating Free–Air Temperature		–55	+125	°C
t_r, t_f	Input Rise or Fall Time	V_{CC} = 2.0 V V_{CC} = 4.5 V V_{CC} = 6.0 V	0 0 0	1000 500 400	ns

Functional operation above the stresses listed in the Recommended Operating Ranges is not implied. Extended exposure to stresses beyond the Recommended Operating Ranges limits may affect device reliability.

3. Unused inputs must always be tied to an appropriate logic voltage level (e.g., either GND or V_{CC}). Unused outputs must be left open.

DC ELECTRICAL CHARACTERISTICS

Symbol	Parameter	Test Conditions	V_{CC} V	Guaranteed Limit			Unit
				–55 to 25°C	≤ 85°C	≤ 125°C	
V_{IH}	Minimum High–Level Input Voltage	V_{OUT} = 0.1 V or V_{CC} – 0.1 V $\|I_{OUT}\| \le 20$ μA	2.0 3.0 4.5 6.0	1.5 2.1 3.15 4.2	1.5 2.1 3.15 4.2	1.5 2.1 3.15 4.2	V
V_{IL}	Maximum Low–Level Input Voltage	V_{OUT} = 0.1 V or V_{CC} – 0.1 V $\|I_{OUT}\| \le 20$ μA	2.0 3.0 4.5 6.0	0.5 0.9 1.35 1.8	0.5 0.9 1.35 1.8	0.5 0.9 1.35 1.8	V
V_{OH}	Minimum High–Level Output Voltage	$V_{IN} = V_{IH}$ or V_{IL}					V
		$\|I_{OUT}\| \le 20$ μA	2.0 4.5 6.0	1.9 4.4 5.9	1.9 4.4 5.9	1.9 4.4 5.9	
		$\|I_{OUT}\| \le 2.4$ mA $\|I_{OUT}\| \le 4.0$ mA $\|I_{OUT}\| \le 5.2$ mA	3.0 4.5 6.0	2.48 3.98 5.48	2.34 3.84 5.34	2.2 3.7 5.2	
V_{OL}	Minimum Low–Level Output Voltage	$V_{IN} = V_{IH}$ or V_{IL}					V
		$\|I_{OUT}\| \le 20$ μA	2.0 4.5 6.0	0.1 0.1 0.1	0.1 0.1 0.1	0.1 0.1 0.1	
		$\|I_{OUT}\| \le 2.4$ mA $\|I_{OUT}\| \le 4.0$ mA $\|I_{OUT}\| \le 5.2$ mA	3.0 4.5 6.0	0.26 0.26 0.26	0.33 0.33 0.33	0.4 0.4 0.4	
I_{IN}	Maximum Input Leakage Current	$V_{IN} = V_{CC}$ or GND	6.0	±0.1	±1.0	±1.0	μA
I_{CC}	Maximum Quiescent Supply Current (per Package)	$V_{IN} = V_{CC}$ or GND	6.0	8.0	80	160	μA

Product parametric performance is indicated in the Electrical Characteristics for the listed test conditions, unless otherwise noted. Product performance may not be indicated by the Electrical Characteristics if operated under different conditions.

AC ELECTRICAL CHARACTERISTICS

Symbol	Parameter	V_{CC} V	Guaranteed Limit			Unit
			–55 to 25°C	≤ 85°C	≤ 125°C	
t_{PLH}, t_{PHL}	Maximum Propagation Delay, D to Y (Figures 3 and 4)	2.0 3.0 4.5 6.0	170 TBD 34 29	215 TBD 43 37	255 TBD 51 43	ns
t_{PLH}, t_{PHL}	Maximum Propagation Delay, D to $\overline{Y}$ (Figures 3 and 4)	2.0 3.0 4.5 6.0	185 TBD 37 31	230 TBD 46 39	280 TBD 56 48	ns
t_{PLH}, t_{PHL}	Maximum Propagation Delay, A to Y (Figures 3 and 4)	2.0 3.0 4.5 6.0	185 TBD 37 31	230 TBD 46 39	280 TBD 56 48	ns
t_{PLH}, t_{PHL}	Maximum Propagation Delay, A to $\overline{Y}$ (Figures 3 and 4)	2.0 3.0 4.5 6.0	205 TBD 41 35	255 TBD 51 43	310 TBD 62 53	ns
t_{PLH}, t_{PHL}	Maximum Propagation Delay, STROBE to Y or $\overline{Y}$ (Figures 3 and 4)	2.0 3.0 4.5 6.0	125 TBD 25 21	155 TBD 31 26	190 TBD 38 32	ns
t_{TLH}, t_{THL}	Maximum Output Transition Time, Any Output (Figures 3 and 4)	2.0 3.0 4.5 6.0	75 30 15 13	95 40 55 19 16	110 55 22 19	ns
C_{IN}	Maximum Input Capacitance	–	10	10	10	pF

			Typical @ 25°C	
C_{PD}	Power Dissipation Capacitance (Per Enabled Output) (Note 4)	5.0	36	pF

4. Used to determine the no–load dynamic power consumption: $P_D = C_{PD} \times V_{CC}^2 \times f + I_{CC} \times V_{CC}$.

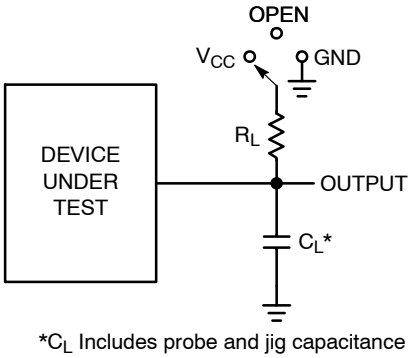

*C_L Includes probe and jig capacitance

Test	Switch Position	C_L	R_L
t_{PLH} / t_{PHL}	Open	50 pF	1 kΩ
t_{PLZ} / t_{PZL}	V_{CC}		
t_{PHZ} / t_{PZH}	GND		

Figure 3. Test Circuit

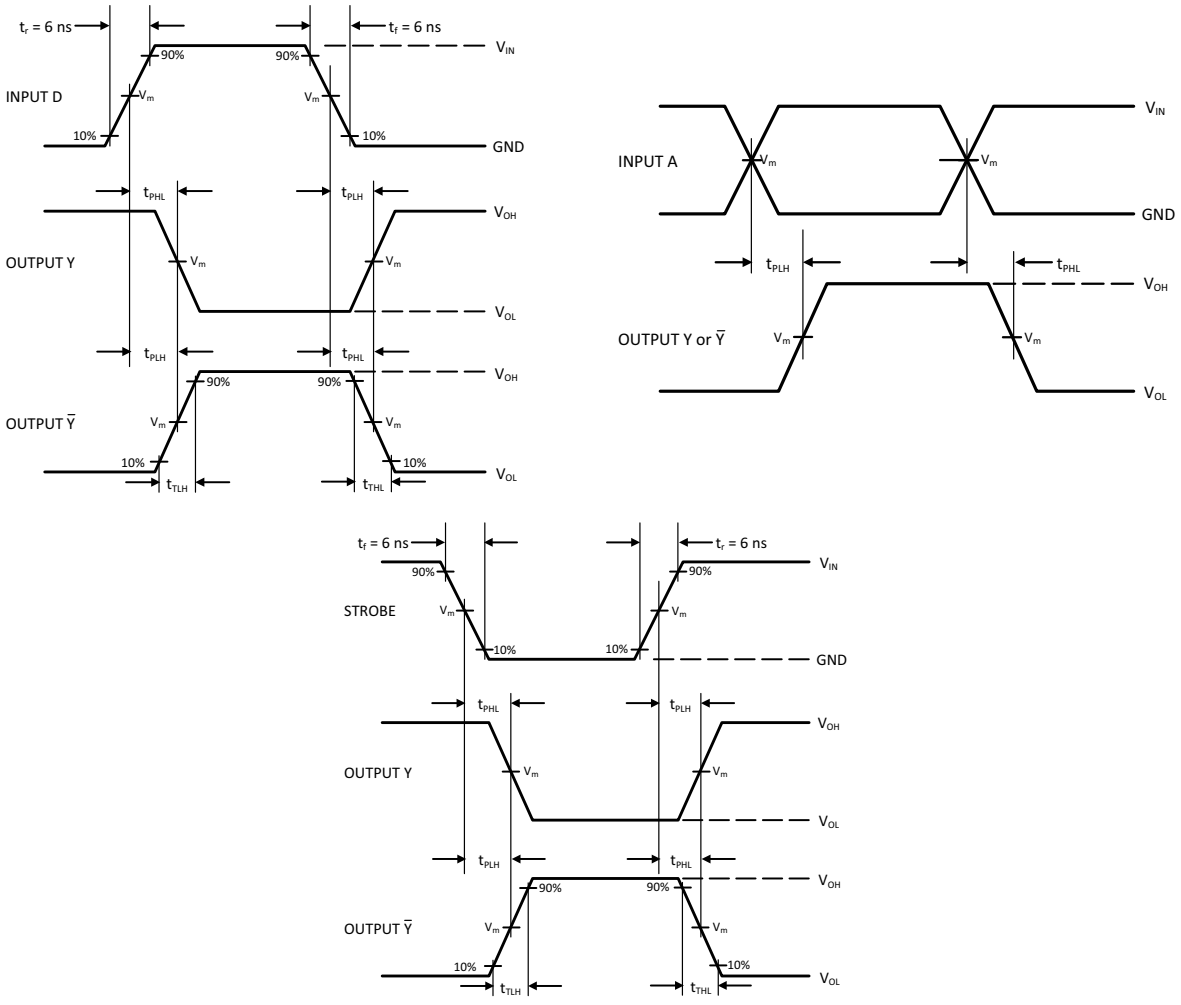

Device	V_{IN}, V	V_m, V
MC74HC151A	V_{CC}	50% x V_{CC}

Figure 4. Switching Waveforms

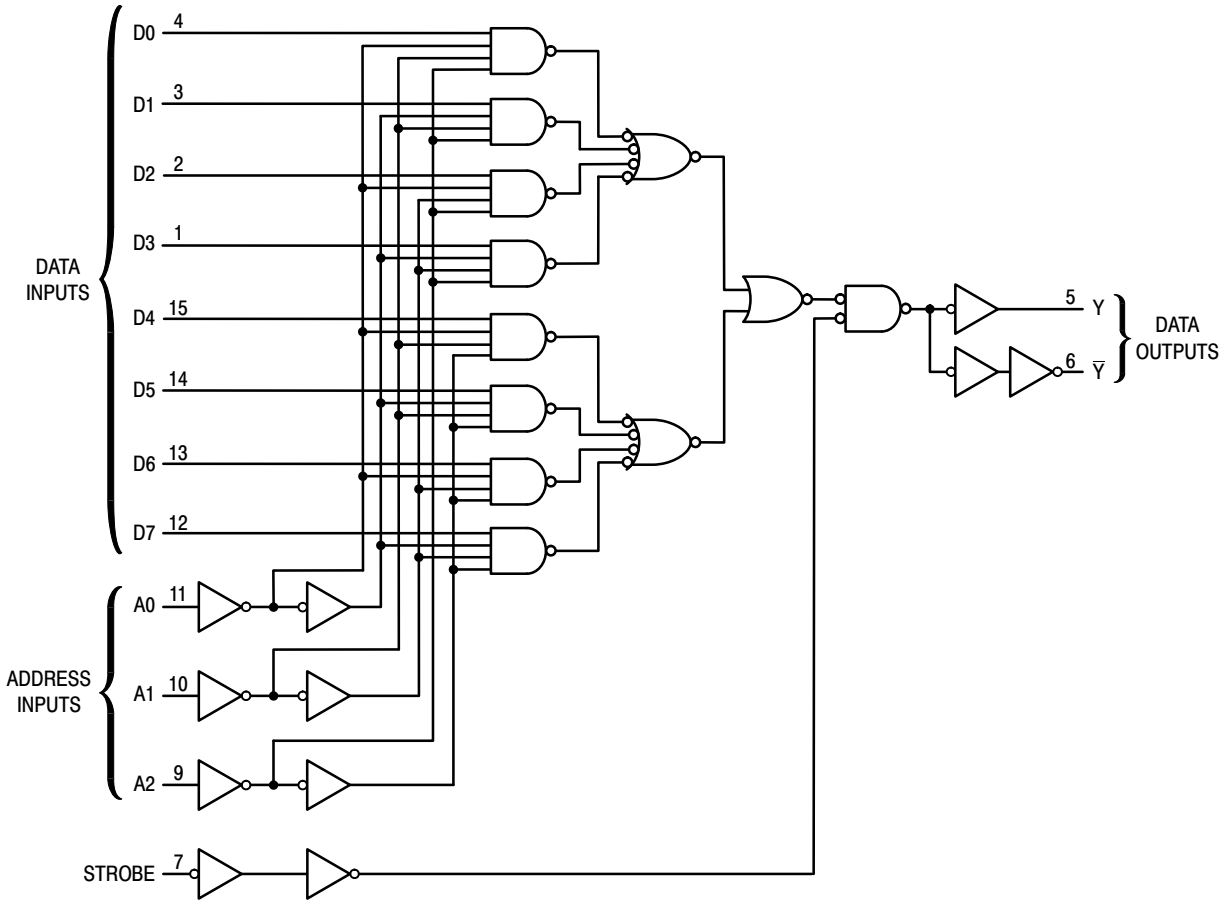

Figure 5. Expanded Logic Diagram

PIN DESCRIPTIONS

INPUTS

D0, D1, … , D7 (Pins 4, 3, 2, 1, 15, 14, 13, 12)

Data inputs. Data on any one of these eight binary inputs may be selected to appear on the output.

CONTROL INPUTS

A0, A1, A2 (Pins 11, 10, 9)

Address inputs. The data on these pins are the binary address of the selected input (see the Function Table).

Strobe (Pin 7)

Strobe. This input pin must be at a low level for the selected data to appear at the outputs. If the Strobe pin is high, the Y output is forced to a low level and the $\overline{Y}$ output is forced to a high level.

OUTPUTS

Y, $\overline{Y}$ (Pins 5, 6)

Data outputs. The selected data is presented at these pins in both true (Y output) and complemented ($\overline{Y}$ output) forms.

ORDERING INFORMATION

Device	Package	Marking	Shipping†
MC74HC151ADR2G	SOIC−16	HC151AG	1000 / Tape & Reel
MC74HC151ADR2G−Q*	SOIC−16	HC151AG	1000 / Tape & Reel
MC74HC151ADTG	TSSOP−16	HC 151A	75 Units / Rail
MC74HC151ADTR2G	TSSOP−16	HC 151A	2500 / Tape & Reel
MC74HC151ADTR2G−Q*	TSSOP−16	HC 151A	2500 / Tape & Reel

†For information on tape and reel specifications, including part orientation and tape sizes, please refer to our Tape and Reel Packaging Specifications Brochure, BRD8011/D.

*−Q Suffix for Automotive and Other Applications Requiring Unique Site and Control Change Requirements; AEC−Q100 Qualified and PPAP Capable.

PACKAGE DIMENSIONS

QFN16, 2.5x3.5, 0.5P
CASE 485AW
ISSUE O

DATE 11 DEC 2008

SCALE 2:1

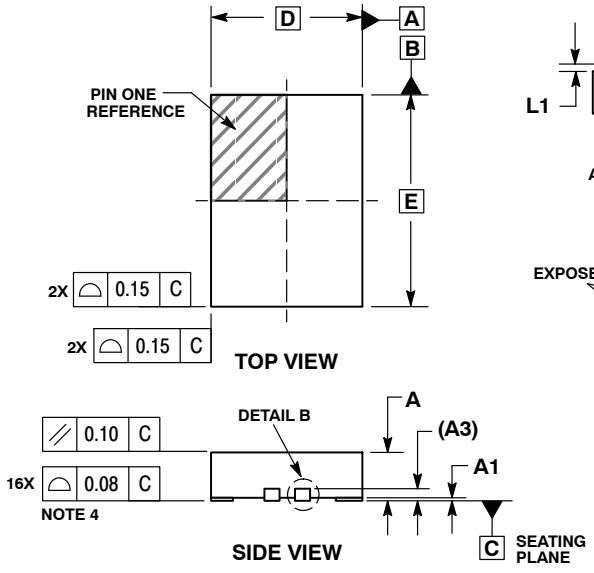

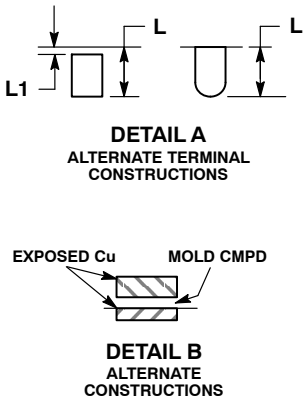

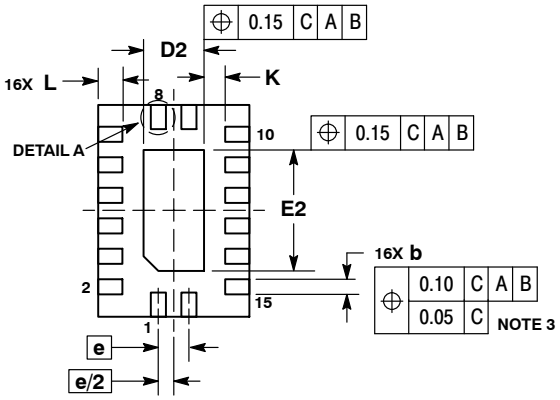

NOTES:
1. DIMENSIONING AND TOLERANCING PER ASME Y14.5M, 1994.
2. CONTROLLING DIMENSION: MILLIMETERS.
3. DIMENSIONS b APPLIES TO PLATED TERMINAL AND IS MEASURED BETWEEN 0.15 AND 0.30 MM FROM TERMINAL.
4. COPLANARITY APPLIES TO THE EXPOSED PAD AS WELL AS THE TERMINALS.

	MILLIMETERS	
DIM	MIN	MAX
A	0.80	1.00
A1	0.00	0.05
A3	0.20 REF	
b	0.20	0.30
D	2.50 BSC	
D2	0.85	1.15
E	3.50 BSC	
E2	1.85	2.15
e	0.50 BSC	
K	0.20	---
L	0.35	0.45
L1	---	0.15

GENERIC MARKING DIAGRAM*



XXXX = Specific Device Code
A = Assembly Location
L = Wafer Lot
Y = Year
W = Work Week
▪ = Pb−Free Package

(Note: Microdot may be in either location)

*This information is generic. Please refer to device data sheet for actual part marking. Pb−Free indicator, “G” or microdot “ ▪”, may or may not be present. Some products may not follow the Generic Marking.

RECOMMENDED SOLDERING FOOTPRINT*

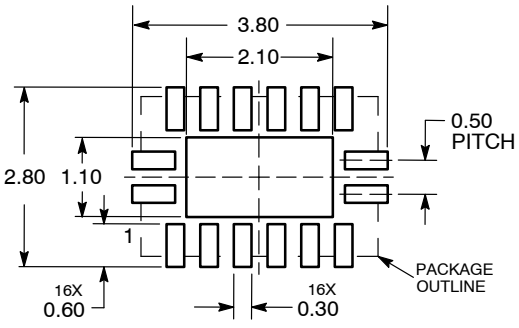

DIMENSIONS: MILLIMETERS

*For additional information on our Pb−Free strategy and soldering details, please download the **onsemi** Soldering and Mounting Techniques Reference Manual, SOLDERRM/D.

MECHANICAL CASE OUTLINE
PACKAGE DIMENSIONS

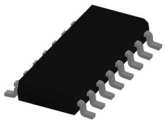

SOIC−16 9.90x3.90x1.50 1.27P
CASE 751B
ISSUE L

DATE 29 MAY 2024

NOTES:
1. DIMENSIONING AND TOLERANCING PER ASME Y14.5M, 2018.
2. DIMENSION IN MILLIMETERS. ANGLE IN DEGREES.
3. DIMENSIONS D AND E1 DO NOT INCLUDE MOLD PROTRUSION.
4. MAXIMUM MOLD PROTRUSION 0.15mm PER SIDE.
5. DIMENSION b DOES NOT INCLUDE DAMBAR PROTRUSION. ALLOWABLE DAMBAR PROTRUSION SHALL BE 0.127mm TOTAL IN EXCESS OF THE b DIMENSION AT MAXIMUM MATERIAL CONDITION.

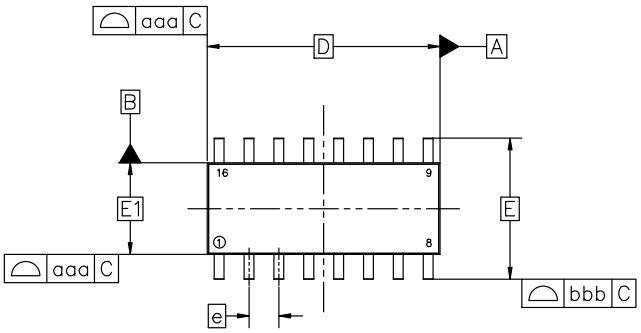

TOP VIEW

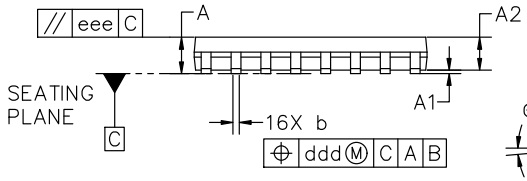

SIDE VIEW

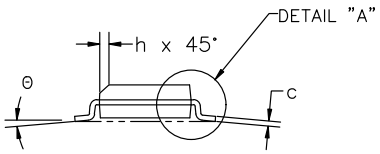

END VIEW

MILLIMETERS			
DIM	MIN	NOM	MAX
A	1.35	1.55	1.75
A1	0.00	0.05	0.10
A2	1.35	1.50	1.65
b	0.35	0.42	0.49
c	0.19	0.22	0.25
D	9.90 BSC		
E	6.00 BSC		
E1	3.90 BSC		
e	1.27 BSC		
h	0.25	−−−	0.50
L	0.40	0.83	1.25
L1	1.05 REF		
θ	0°	−−−	7°
TOLERANCE OF FORM AND POSITION			
aaa	0.10		
bbb	0.20		
ccc	0.10		
ddd	0.25		
eee	0.10		

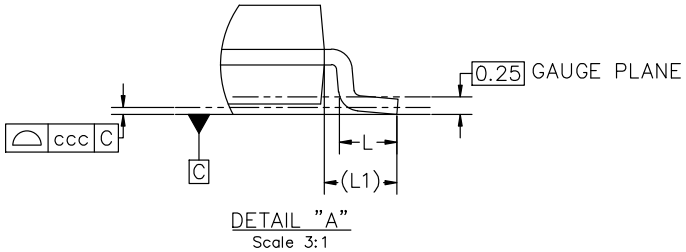

DETAIL "A"
Scale 3:1

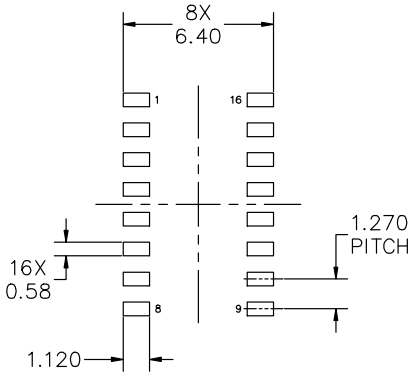

RECOMMENDED MOUNTING FOOTPRINT

*FOR ADDITIONAL INFORMATION ON OUR PB−FREE STRATEGY AND SOLDERING DETAILS, PLEASE DOWNLOAD THE onsemi SOLDERING AND MOUNTING TECHNIQUES REFERENCE MANUAL, SOLDERRM/D

DOCUMENT NUMBER:	98ASB42566B	Electronic versions are uncontrolled except when accessed directly from the Document Repository. Printed versions are uncontrolled except when stamped "CONTROLLED COPY" in red.
DESCRIPTION:	SOIC−16 9.90X3.90X1.50 1.27P	PAGE 1 OF 2

onsemi and onsemi are trademarks of Semiconductor Components Industries, LLC dba **onsemi** or its subsidiaries in the United States and/or other countries. **onsemi** reserves the right to make changes without further notice to any products herein. **onsemi** makes no warranty, representation or guarantee regarding the suitability of its products for any particular purpose, nor does **onsemi** assume any liability arising out of the application or use of any product or circuit, and specifically disclaims any and all liability, including without limitation special, consequential or incidental damages. **onsemi** does not convey any license under its patent rights nor the rights of others.

© Semiconductor Components Industries, LLC, 2019

SOIC−16 9.90x3.90x1.50 1.27P
CASE 751B
ISSUE L

DATE 29 MAY 2024

GENERIC
MARKING DIAGRAM*

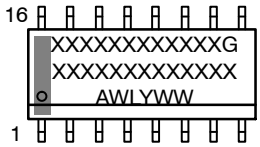

XXXXX = Specific Device Code
A = Assembly Location
WL = Wafer Lot
Y = Year
WW = Work Week
G = Pb−Free Package

*This information is generic. Please refer to device data sheet for actual part marking. Pb−Free indicator, "G" or microdot "▪", may or may not be present. Some products may not follow the Generic Marking.

STYLE 1:		STYLE 2:		STYLE 3:		STYLE 4:	
PIN 1.	COLLECTOR	PIN 1.	CATHODE	PIN 1.	COLLECTOR, DYE #1	PIN 1.	COLLECTOR, DYE #1
2.	BASE	2.	ANODE	2.	BASE, #1	2.	COLLECTOR, #1
3.	EMITTER	3.	NO CONNECTION	3.	EMITTER, #1	3.	COLLECTOR, #2
4.	NO CONNECTION	4.	CATHODE	4.	COLLECTOR, #1	4.	COLLECTOR, #2
5.	EMITTER	5.	CATHODE	5.	COLLECTOR, #2	5.	COLLECTOR, #3
6.	BASE	6.	NO CONNECTION	6.	BASE, #2	6.	COLLECTOR, #3
7.	COLLECTOR	7.	ANODE	7.	EMITTER, #2	7.	COLLECTOR, #4
8.	COLLECTOR	8.	CATHODE	8.	COLLECTOR, #2	8.	COLLECTOR, #4
9.	BASE	9.	CATHODE	9.	COLLECTOR, #3	9.	BASE, #4
10.	EMITTER	10.	ANODE	10.	BASE, #3	10.	EMITTER, #4
11.	NO CONNECTION	11.	NO CONNECTION	11.	EMITTER, #3	11.	BASE, #3
12.	EMITTER	12.	CATHODE	12.	COLLECTOR, #3	12.	EMITTER, #3
13.	BASE	13.	CATHODE	13.	COLLECTOR, #4	13.	BASE, #2
14.	COLLECTOR	14.	NO CONNECTION	14.	BASE, #4	14.	EMITTER, #2
15.	EMITTER	15.	ANODE	15.	EMITTER, #4	15.	BASE, #1
16.	COLLECTOR	16.	CATHODE	16.	COLLECTOR, #4	16.	EMITTER, #1

STYLE 5:		STYLE 6:		STYLE 7:	
PIN 1.	DRAIN, DYE #1	PIN 1.	CATHODE	PIN 1.	SOURCE N-CH
2.	DRAIN, #1	2.	CATHODE	2.	COMMON DRAIN (OUTPUT)
3.	DRAIN, #2	3.	CATHODE	3.	COMMON DRAIN (OUTPUT)
4.	DRAIN, #2	4.	CATHODE	4.	GATE P-CH
5.	DRAIN, #3	5.	CATHODE	5.	COMMON DRAIN (OUTPUT)
6.	DRAIN, #3	6.	CATHODE	6.	COMMON DRAIN (OUTPUT)
7.	DRAIN, #4	7.	CATHODE	7.	COMMON DRAIN (OUTPUT)
8.	DRAIN, #4	8.	CATHODE	8.	SOURCE P-CH
9.	GATE, #4	9.	ANODE	9.	SOURCE P-CH
10.	SOURCE, #4	10.	ANODE	10.	COMMON DRAIN (OUTPUT)
11.	GATE, #3	11.	ANODE	11.	COMMON DRAIN (OUTPUT)
12.	SOURCE, #3	12.	ANODE	12.	COMMON DRAIN (OUTPUT)
13.	GATE, #2	13.	ANODE	13.	GATE N-CH
14.	SOURCE, #2	14.	ANODE	14.	COMMON DRAIN (OUTPUT)
15.	GATE, #1	15.	ANODE	15.	COMMON DRAIN (OUTPUT)
16.	SOURCE, #1	16.	ANODE	16.	SOURCE N-CH

onsemi and onsemi are trademarks of Semiconductor Components Industries, LLC dba **onsemi** or its subsidiaries in the United States and/or other countries. **onsemi** reserves the right to make changes without further notice to any products herein. **onsemi** makes no warranty, representation or guarantee regarding the suitability of its products for any particular purpose, nor does **onsemi** assume any liability arising out of the application or use of any product or circuit, and specifically disclaims any and all liability, including without limitation special, consequential or incidental damages. **onsemi** does not convey any license under its patent rights nor the rights of others.

© Semiconductor Components Industries, LLC, 2019

MECHANICAL CASE OUTLINE
PACKAGE DIMENSIONS

TSSOP−16 WB
CASE 948F
ISSUE B

DATE 19 OCT 2006

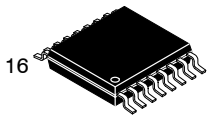

SCALE 2:1

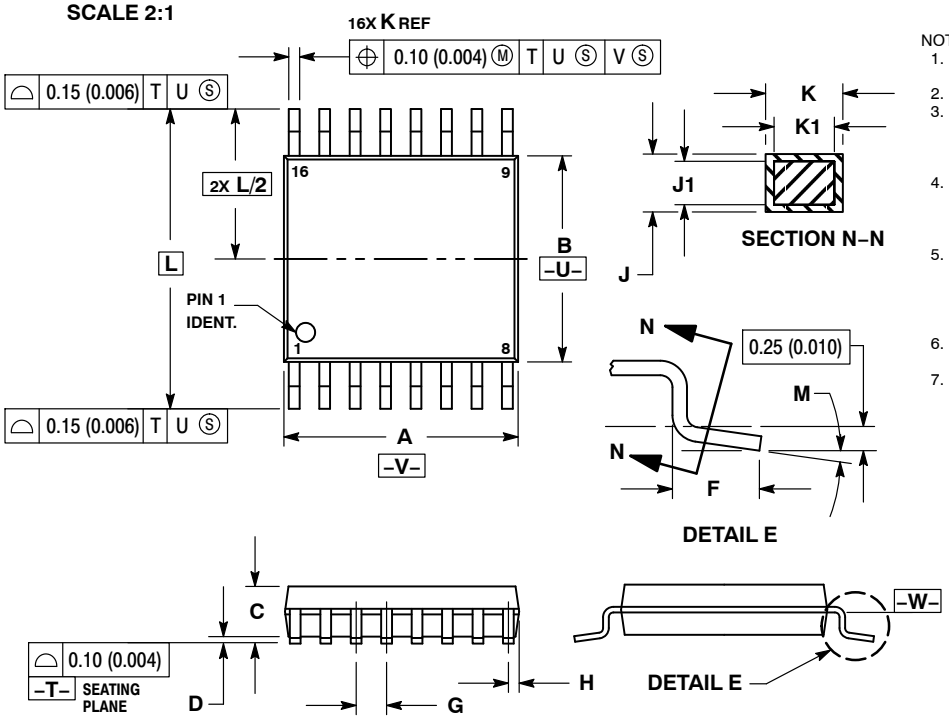

NOTES:
1. DIMENSIONING AND TOLERANCING PER ANSI Y14.5M, 1982.
2. CONTROLLING DIMENSION: MILLIMETER.
3. DIMENSION A DOES NOT INCLUDE MOLD FLASH. PROTRUSIONS OR GATE BURRS. MOLD FLASH OR GATE BURRS SHALL NOT EXCEED 0.15 (0.006) PER SIDE.
4. DIMENSION B DOES NOT INCLUDE INTERLEAD FLASH OR PROTRUSION. INTERLEAD FLASH OR PROTRUSION SHALL NOT EXCEED 0.25 (0.010) PER SIDE.
5. DIMENSION K DOES NOT INCLUDE DAMBAR PROTRUSION. ALLOWABLE DAMBAR PROTRUSION SHALL BE 0.08 (0.003) TOTAL IN EXCESS OF THE K DIMENSION AT MAXIMUM MATERIAL CONDITION.
6. TERMINAL NUMBERS ARE SHOWN FOR REFERENCE ONLY.
7. DIMENSION A AND B ARE TO BE DETERMINED AT DATUM PLANE −W−.

	MILLIMETERS		INCHES	
DIM	MIN	MAX	MIN	MAX
A	4.90	5.10	0.193	0.200
B	4.30	4.50	0.169	0.177
C	−−−	1.20	−−−	0.047
D	0.05	0.15	0.002	0.006
F	0.50	0.75	0.020	0.030
G	0.65 BSC		0.026 BSC	
H	0.18	0.28	0.007	0.011
J	0.09	0.20	0.004	0.008
J1	0.09	0.16	0.004	0.006
K	0.19	0.30	0.007	0.012
K1	0.19	0.25	0.007	0.010
L	6.40 BSC		0.252 BSC	
M	0 °	8 °	0 °	8 °

RECOMMENDED SOLDERING FOOTPRINT*

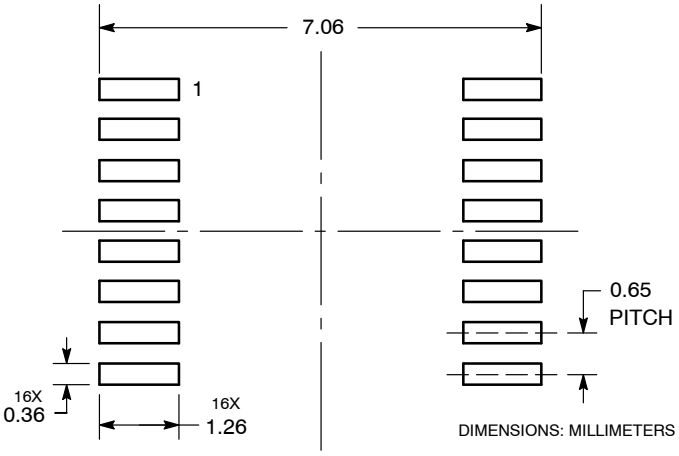

*For additional information on our Pb−Free strategy and soldering details, please download the **onsemi** Soldering and Mounting Techniques Reference Manual, SOLDERRM/D.

GENERIC MARKING DIAGRAM*

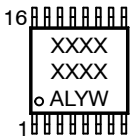

XXXX	= Specific Device Code
A	= Assembly Location
L	= Wafer Lot
Y	= Year
W	= Work Week
G or ▪	= Pb−Free Package

*This information is generic. Please refer to device data sheet for actual part marking. Pb−Free indicator, “G” or microdot “ ▪”, may or may not be present. Some products may not follow the Generic Marking.

DOCUMENT NUMBER:	**98ASH70247A**	Electronic versions are uncontrolled except when accessed directly from the Document Repository. Printed versions are uncontrolled except when stamped “CONTROLLED COPY” in red.	
DESCRIPTION:	**TSSOP−16**		**PAGE 1 OF 1**

onsemi and onsemi are trademarks of Semiconductor Components Industries, LLC dba **onsemi** or its subsidiaries in the United States and/or other countries. **onsemi** reserves the right to make changes without further notice to any products herein. **onsemi** makes no warranty, representation or guarantee regarding the suitability of its products for any particular purpose, nor does **onsemi** assume any liability arising out of the application or use of any product or circuit, and specifically disclaims any and all liability, including without limitation special, consequential or incidental damages. **onsemi** does not convey any license under its patent rights nor the rights of others.

© Semiconductor Components Industries, LLC, 2019

onsemi, , and other names, marks, and brands are registered and/or common law trademarks of Semiconductor Components Industries, LLC dba "**onsemi**" or its affiliates and/or subsidiaries in the United States and/or other countries. **onsemi** owns the rights to a number of patents, trademarks, copyrights, trade secrets, and other intellectual property. A listing of **onsemi**'s product/patent coverage may be accessed at www.onsemi.com/site/pdf/Patent−Marking.pdf. **onsemi** reserves the right to make changes at any time to any products or information herein, without notice. The information herein is provided "as−is" and **onsemi** makes no warranty, representation or guarantee regarding the accuracy of the information, product features, availability, functionality, or suitability of its products for any particular purpose, nor does **onsemi** assume any liability arising out of the application or use of any product or circuit, and specifically disclaims any and all liability, including without limitation special, consequential or incidental damages. Buyer is responsible for its products and applications using **onsemi** products, including compliance with all laws, regulations and safety requirements or standards, regardless of any support or applications information provided by **onsemi**. "Typical" parameters which may be provided in **onsemi** data sheets and/or specifications can and do vary in different applications and actual performance may vary over time. All operating parameters, including "Typicals" must be validated for each customer application by customer's technical experts. **onsemi** does not convey any license under any of its intellectual property rights nor the rights of others. **onsemi** products are not designed, intended, or authorized for use as a critical component in life support systems or any FDA Class 3 medical devices or medical devices with a same or similar classification in a foreign jurisdiction or any devices intended for implantation in the human body. Should Buyer purchase or use **onsemi** products for any such unintended or unauthorized application, Buyer shall indemnify and hold **onsemi** and its officers, employees, subsidiaries, affiliates, and distributors harmless against all claims, costs, damages, and expenses, and reasonable attorney fees arising out of, directly or indirectly, any claim of personal injury or death associated with such unintended or unauthorized use, even if such claim alleges that **onsemi** was negligent regarding the design or manufacture of the part. **onsemi** is an Equal Opportunity/Affirmative Action Employer. This literature is subject to all applicable copyright laws and is not for resale in any manner.

ADDITIONAL INFORMATION

TECHNICAL PUBLICATIONS:
Technical Library: www.onsemi.com/design/resources/technical−documentation
onsemi Website: www.onsemi.com

ONLINE SUPPORT: www.onsemi.com/support
For additional information, please contact your local Sales Representative at www.onsemi.com/support/sales