Octal 3-State Non-Inverting D Flip-Flop

High−Performance Silicon−Gate CMOS

MC74HC374A, MC74HCT374A

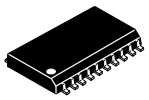

SOIC−20
DW SUFFIX
CASE 751D

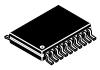

TSSOP−20
DT SUFFIX
CASE 948E

The MC74HC374A/MC74HCT374A is identical in pinout to the LS374. The MC74HC374A inputs are compatible with standard CMOS outputs; with pull−up resistors, they are compatible with LSTTL outputs. The MC74HCT374A may be used as a level converter for interfacing TTL or NMOS outputs to High Speed CMOS inputs.

Data meeting the set−up time is clocked to the outputs with the rising edge of the Clock. The Output Enable input does not affect the states of the flip−flops but when Output Enable is high, all device outputs are forced to the high−impedance state. Thus, data may be stored even when the outputs are not enabled.

The HC374A/HCT374A is identical in function to the HC574A/HCT574A which has the input pins on the opposite side of the package from the output. This device is similar in function to the HC534A/HCT534A which has inverting outputs.

Features

- Output Drive Capability: 15 LSTTL Loads
- Outputs Directly Interface to CMOS, NMOS, and TTL
- Operating Voltage Range: 2.0 to 6.0 V (HC), 4.5 to 5.5 V (HCT)
- Low Input Current: 1.0 μA
- High Noise Immunity Characteristic of CMOS Devices
- In Compliance with the Requirements Defined by JEDEC Standard No. 7 A
- Chip Complexity: 276 FETs or 69 Equivalent Gates
- −Q Suffix for Automotive and Other Applications Requiring Unique Site and Control Change Requirements; AEC−Q100 Qualified and PPAP Capable
- These Devices are Pb−Free and are RoHS Compliant

PIN ASSIGNMENT

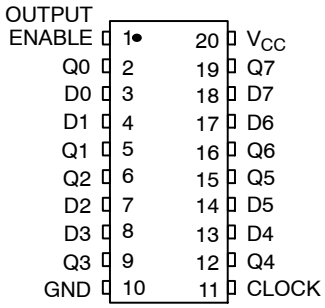

MARKING DIAGRAMS

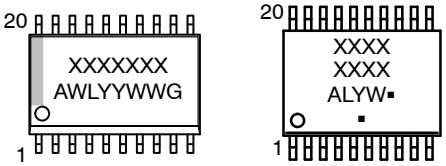

SOIC−20 TSSOP−20

XXXXXXXX	= Specific Device Code
A	= Assembly Location
WL, L	= Wafer Lot
YY, Y	= Year
WW, W	= Work Week
G or ▪	= Pb−Free Package

(Note: Microdot may be in either location)

FUNCTION TABLE

Inputs			Output
Output Enable	Clock	D	Q
L	↑	H	H
L	↑	L	L
L	L,H,↓	X	No Change
H	X	X	Z

X = don't care
Z = high impedance

ORDERING INFORMATION

See detailed ordering and shipping information on page 8 of this data sheet.

© Semiconductor Components Industries, LLC, 2014

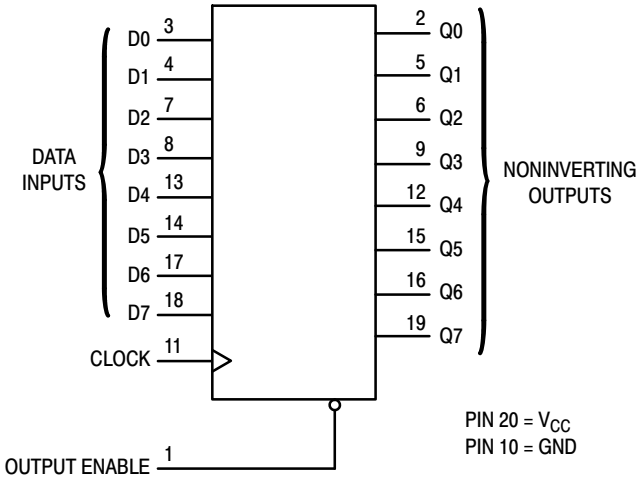

Figure 1. Logic Diagram

MAXIMUM RATINGS

Symbol	Parameter		Value	Unit
V_{CC}	DC Supply Voltage		−0.5 to +6.5	V
V_{IN}	DC Input Voltage		−0.5 to V_{CC}+0.5	V
V_{OUT}	DC Output Voltage		−0.5 to V_{CC}+0.5	V
I_{IN}	DC Input Diode Current, per Pin		±20	mA
I_{OUT}	DC Input Diode Current, Per Pin		±35	mA
I_{CC}	DC Supply Current, V_{CC} and GND Pins		±75	mA
I_{IK}	Input Clamp Current (V_{IN} < 0 or V_{IN} > V_{CC})		±20	mA
I_{OK}	Output Clamp Current (V_{OUT} < 0 or V_{OUT} > V_{CC})		±20	mA
T_{STG}	Storage Temperature Range		−65 to +150	°C
T_L	Lead Temperature, 1 mm from Case for 10 secs		260	°C
T_J	Junction Temperature Under Bias		+150	°C
θ_{JA}	Thermal Resistance (Note 1)	SOIC−20W WQFN20 QFN20 TSSOP−20	96 99 111 150	°C/W
P_D	Power Dissipation in Still Air at 25°C	SOIC−20W WQFN20 QFN20 TSSOP−20	1302 1256 1127 833	mW
MSL	Moisture Sensitivity	SOIC−20W All Other Packages	Level 3 Level 1	−
F_R	Flammability Rating	Oxygen Index: 28 to 34	UL 94 V−0 @ 0.125 in	−
V_{ESD}	ESD Withstand Voltage (Note 2)	Human Body Model Charged Device Model	> 2000 > 1000	V

Stresses exceeding those listed in the Maximum Ratings table may damage the device. If any of these limits are exceeded, device functionality should not be assumed, damage may occur and reliability may be affected.

1. Measured with minimum pad spacing on an FR4 board, using 76 mm−by−114 mm, 2−ounce copper trace no air flow per JESD51−7.
2. HBM tested to EIA / JESD22−A114−A. CDM tested to JESD22−C101−A. JEDEC recommends that ESD qualification to EIA/JESD22−A115A (Machine Model) be discontinued.

RECOMMENDED OPERATING CONDITIONS

Symbol	Parameter		Min	Max	Unit
MC74HC					
V_{CC}	DC Supply Voltage		2.0	6.0	V
V_{IN}, V_{OUT}	DC Input Voltage, Output Voltage (Note 3)		0	V_{CC}	V
T_A	Operating Free−Air Temperature		−55	+125	°C
t_r, t_f	Input Rise or Fall Time	V_{CC} = 2.0 V V_{CC} = 4.5 V V_{CC} = 6.0 V	0 0 0	1000 500 400	ns
MC74HCT					
V_{CC}	DC Supply Voltage		4.5	5.5	V
V_{IN}, V_{OUT}	DC Input Voltage, Output Voltage (Note 3)		0	V_{CC}	V
T_A	Operating Free−Air Temperature		−55	+125	°C
t_r, t_f	Input Rise or Fall Time		0	500	ns

Functional operation above the stresses listed in the Recommended Operating Ranges is not implied. Extended exposure to stresses beyond the Recommended Operating Ranges limits may affect device reliability.

3. Unused inputs must always be tied to an appropriate logic voltage level (e.g., either GND or V_{CC}). Unused outputs must be left open.

DC ELECTRICAL CHARACTERISTICS (MC74HC374A)

Symbol	Parameter	Test Conditions	V_{CC} V	Guaranteed Limit			Unit
				−55 to 25°C	≤ 85°C	≤ 125°C	
V_{IH}	Minimum High−Level Input Voltage	V_{out} = 0.1 V or V_{CC} − 0.1 V $\|I_{out}\| \le 20$ μA	2.0 3.0 4.5 6.0	1.50 2.10 3.15 4.20	1.50 2.10 3.15 4.20	1.50 2.10 3.15 4.20	V
V_{IL}	Maximum Low−Level Input Voltage	V_{out} = 0.1 V or V_{CC} − 0.1 V $\|I_{out}\| \le 20$ μA	2.0 3.0 4.5 6.0	0.50 0.90 1.35 1.80	0.50 0.90 1.35 1.80	0.50 0.90 1.35 1.80	V
V_{OH}	Minimum High−Level Output Voltage	V_{in} = V_{IH} or V_{IL} $\|I_{out}\| \le 20$ μA	2.0 4.5 6.0	1.90 4.40 5.90	1.90 4.40 5.90	1.90 4.40 5.90	V
		V_{in} = V_{IH} or V_{IL} $\|I_{out}\| \le 2.4$ mA $\|I_{out}\| \le 6.0$ mA $\|I_{out}\| \le 7.8$ mA	3.0 4.5 6.0	2.48 2.98 5.48	2.34 3.84 5.34	2.20 3.70 5.20	V
V_{OL}	Maximum Low−Level Output Voltage	V_{in} = V_{IH} or V_{IL} $\|I_{out}\| \le 20$ μA	2.0 4.5 6.0	0.10 0.10 0.10	0.10 0.10 0.10	0.10 0.10 0.10	V
		V_{in} = V_{IH} or V_{IL} $\|I_{out}\| \le 2.4$ mA $\|I_{out}\| \le 6.0$ mA $\|I_{out}\| \le 7.8$ mA	3.0 4.5 6.0	0.26 0.26 0.26	0.33 0.33 0.33	0.40 0.40 0.40	V
I_{in}	Maximum Input Leakage Current	V_{in} = V_{CC} or GND	6.0	±0.1	±1.0	±1.0	μA
I_{OZ}	Maximum Three−State Leakage Current	Output in High−Impedance State V_{in} = V_{IL} or V_{IH} V_{out} = V_{CC} or GND	6.0	±0.5	±5.0	±10	μA
I_{CC}	Maximum Quiescent Supply Current (per Package)	V_{in} = V_{CC} or GND I_{out} = 0 μA	6.0	4	40	160	μA

Product parametric performance is indicated in the Electrical Characteristics for the listed test conditions, unless otherwise noted. Product performance may not be indicated by the Electrical Characteristics if operated under different conditions.

AC ELECTRICAL CHARACTERISTICS (MC74HC374A)

Symbol	Parameter	V_{CC} V	Guaranteed Limit			Unit
			–55 to 25°C	≤ 85°C	≤ 125°C	
f_{max}	Maximum Clock Frequency (50% Duty Cycle)	2.0 3.0 4.5 6.0	6 15 30 35	5 10 24 28	4 8 20 24	MHz
t_{PLH} t_{PHL}	Maximum Propagation Delay, Input Clock to Q (Figures 2 and 3)	2.0 3.0 4.5 6.0	125 80 25 21	155 110 31 26	190 130 38 32	ns
t_{PLZ} t_{PHZ}	Maximum Propagation Delay, Output Enable to Q (Figures 2 and 4)	2.0 3.0 4.5 6.0	150 100 30 26	190 125 38 33	225 150 45 38	ns
t_{PZL} t_{PZH}	Maximum Propagation Delay, Output Enable to Q (Figures 2 and 4)	2.0 3.0 4.5 6.0	150 100 30 26	190 125 38 33	225 150 45 38	ns
t_{TLH} t_{THL}	Maximum Output Transition Time, Any Output (Figures 2 and 3)	2.0 3.0 4.5 6.0	75 27 15 13	95 32 19 16	110 36 22 19	ns
C_{in}	Maximum Input Capacitance		10	10	10	pF
C_{out}	Maximum Three−State Output Capacitance (Output in High−Impedance State)		15	15	15	pF

		Typical @ 25°C, V_{CC} = 5.0 V	
C_{PD}	Power Dissipation Capacitance (Per Enabled Output)*	34	pF

Product parametric performance is indicated in the Electrical Characteristics for the listed test conditions, unless otherwise noted. Product performance may not be indicated by the Electrical Characteristics if operated under different conditions.
*Used to determine the no−load dynamic power consumption: $P_D = C_{PD} V_{CC}^2 f + I_{CC} V_{CC}$.

TIMING REQUIREMENTS (MC74HC374A)

Symbol	Parameter	Figure	V_{CC} V	Guaranteed Limit						Unit
				–55 to 25°C		≤ 85°C		≤ 125°C		
				Min	Max	Min	Max	Min	Max	
t_{su}	Minimum Setup Time, Data to Clock	5	2.0 3.0 4.5 6.0	50 40 10 9		65 50 13 11		75 60 15 13		ns
t_h	Minimum Hold Time, Clock to Data	5	2.0 3.0 4.5 6.0	5.0 5.0 5.0 5.0		5.0 5 0 5.0 5.0		5.0 5.0 5.0 5.0		ns
t_w	Minimum Pulse Width, Clock	2	2.0 3.0 4.5 6.0	60 23 12 10		75 27 15 13		90 32 18 15		ns
t_r, t_f	Maximum Input Rise and Fall Times	2	2.0 3.0 4.5 6.0		1000 800 500 400		1000 800 500 400		1000 800 500 400	ns

DC ELECTRICAL CHARACTERISTICS (MC74HCT374A)

Symbol	Parameter	Test Conditions	V_{CC} V	Guaranteed Limit			Unit
				–55 to 25°C	≤ 85°C	≤ 125°C	
V_{IH}	Minimum High–Level Input Voltage	V_{out} = 0.1 V or V_{CC} – 0.1 V $\|I_{out}\| \le 20$ μA	4.5 5.5	2.0 2.0	2.0 2.0	2.0 2.0	V
V_{IL}	Maximum Low–Level Input Voltage	V_{out} = 0.1 V or V_{CC} – 0.1 V $\|I_{out}\| \le 20$ μA	4.5 5.5	0.8 0.8	0.8 0.8	0.8 0.8	V
V_{OH}	Minimum High–Level Output Voltage	V_{in} = V_{IH} or V_{IL} $\|I_{out}\| \le 20$ μA	4.5 5.5	4.4 5.4	4.4 5.4	4.4 5.4	
		V_{in} = V_{IH} or V_{IL} $\|I_{out}\| \le 6.0$ mA	4.5	3.98	3.84	3.7	V
V_{OL}	Maximum Low–Level Output Voltage	V_{in} = V_{IH} or V_{IL} $\|I_{out}\| \le 20$ μA	4.5 5.5	0.1 0.1	0.1 0.1	0.1 0.1	
		V_{in} = V_{IH} or V_{IL} $\|I_{out}\| \le 6.0$ mA	4.5	0.26	0.33	0.4	
I_{in}	Maximum Input Leakage Current	V_{in} = V_{CC} or GND	5.5	±0.1	±1.0	±1.0	μA
I_{CC}	Maximum Quiescent Supply Current (per Package)	V_{in} = V_{CC} or GND I_{out} = 0 μA	5.5	4.0	40	160	μA
I_{OZ}	Maximum Three–State Leakage Current	V_{in} = V_{IL} or V_{IH} (Note 4) V_{out} = V_{CC} or GND	5.5	–0.5	–5.0	–10	μA

ΔI_{CC}	Additional Quiescent Supply Current	V_{in} = 2.4 V, Any One Input V_{in} = V_{CC} or GND, Other Inputs I_{out} = 0 μA		≥ –55°C	25°C to 125°C		
			5.5	2.9	2.4		mA

Product parametric performance is indicated in the Electrical Characteristics for the listed test conditions, unless otherwise noted. Product performance may not be indicated by the Electrical Characteristics if operated under different conditions.

4. Output in high–impedance state.

AC ELECTRICAL CHARACTERISTICS (MC74HCT374A)

Symbol	Parameter	Guaranteed Limit			Unit
		–55 to 25°C	≤ 85°C	≤ 125°C	
f_{MAX}	Maximum Clock Frequency (50% Duty Cycle)	30	24	20	MHz
t_{PLH}, t_{PHL}	Maximum Propagation Delay, Clock to Q	30	38	45	ns
t_{PLZ}, t_{PHZ}	Maximum Propagation Delay, Output Enable to Q	28	35	42	ns
t_{PZH}, t_{PZL}	Maximum Propagation Delay Time, Output Enable to Q	28	35	42	ns
t_{TLH}, t_{THL}	Maximum Output Transition Time, Any Output	12	15	18	ns
C_{in}	Maximum Input Capacitance	10	10	10	pF

		Typical @ 25°C, V_{CC} = 5.0 V	
C_{PD}	Power Dissipation Capacitance (Per Flip–Flop)*	58	pF

Product parametric performance is indicated in the Electrical Characteristics for the listed test conditions, unless otherwise noted. Product performance may not be indicated by the Electrical Characteristics if operated under different conditions.
*Used to determine the no–load dynamic power consumption: $P_D = C_{PD} V_{CC}^2 f + I_{CC} V_{CC}$.

TIMING REQUIREMENTS (MC74HCT374A)

Symbol	Parameter	Guaranteed Limit						Unit
		– 55 to 25°C		≤ 85°C		≤ 125°C		
		Min	Max	Min	Max	Min	Max	
t_{su}	Minimum Setup Time, Data to Clock	10		13		15		ns
t_h	Minimum Hold Time, Clock to Data	5.0		5.0		5.0		ns
t_w	Minimum Pulse Width, Clock	15		19		22		ns
t_r, t_f	Maximum Input Rise and Fall Times		500		500		500	ns

SWITCHING WAVEFORMS

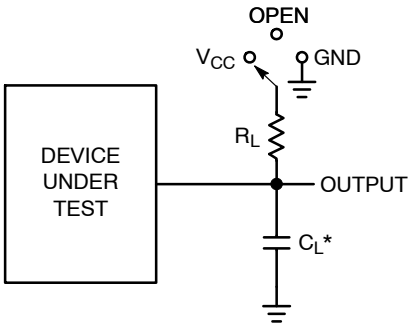

*C_L Includes probe and jig capacitance

Test	Switch Position	C_L	R_L
t_{PLH} / t_{PHL}	Open	50 pF	1 kΩ
t_{PLZ} / t_{PZL}	V_{CC}		
t_{PHZ} / t_{PZH}	GND		

Figure 2. Test Circuit

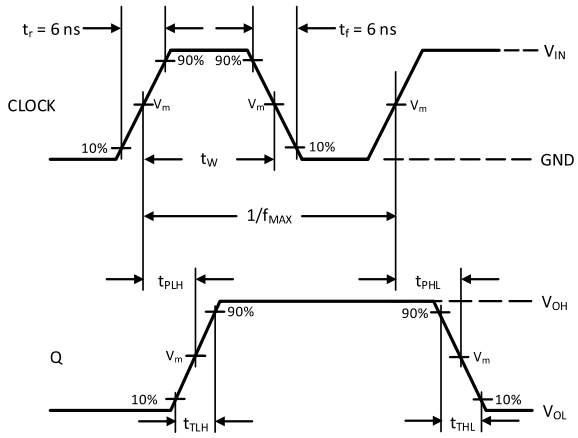

Figure 3.

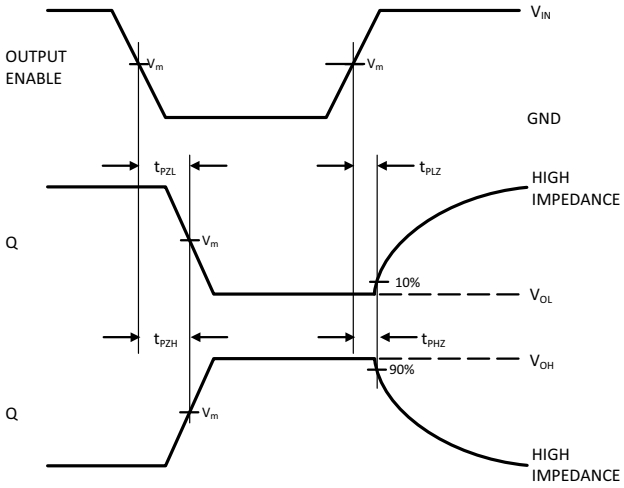

Figure 4.

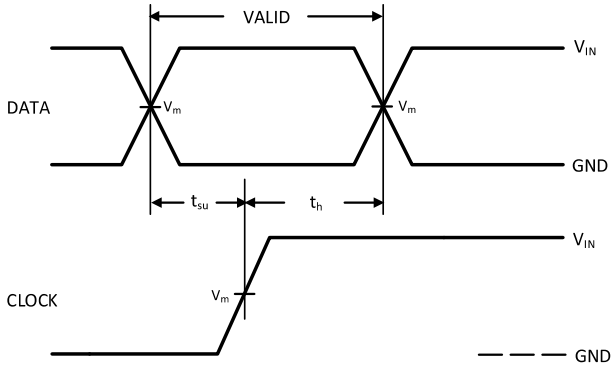

Figure 5.

Device	V_{IN}, V	V_m, V
MC74HC374A	V_{CC}	50% x V_{CC}
MC74HCT374A	3 V	1.3 V

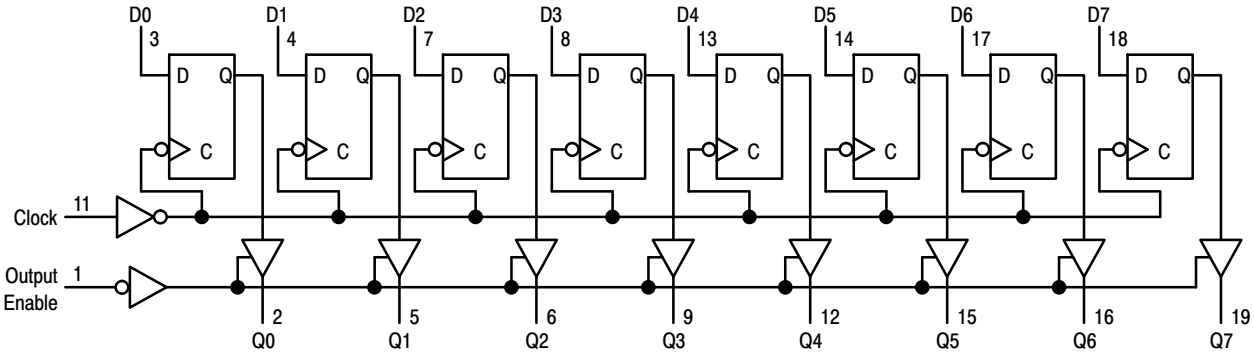

Figure 6. Expanded Logic Diagram

ORDERING INFORMATION

Device	Marking	Package	Shipping†
MC74HC374ADWG	HC374A	SOIC−20 Wide	38 Units / Rail
MC74HC374ADWR2G	HC374A	SOIC−20 Wide	1000 / Tape & Reel
MC74HC374ADWR2G−Q*	HC374A	SOIC−20 Wide	1000 / Tape & Reel
MC74HC374ADTR2G	HC 374A	TSSOP−20	2500 / Tape & Reel
MC74HC374ADTR2G−Q*	HC 374A	TSSOP−20	2500 / Tape & Reel
MC74HCT374ADWG	HCT374A	SOIC−20 Wide	38 Units / Rail
MC74HCT374ADWR2G	HCT374A	SOIC−20 Wide	1000 / Tape & Reel
MC74HCT374ADWR2G−Q*	HCT374A	SOIC−20 Wide	1000 / Tape & Reel
MC74HCT374ADTR2G	HCT 374A	TSSOP−20	2500 / Tape & Reel
MC74HCT374ADTR2G−Q*	HCT 374A	TSSOP−20	2500 / Tape & Reel

†For information on tape and reel specifications, including part orientation and tape sizes, please refer to our Tape and Reel Packaging Specifications Brochure, BRD8011/D.

*−Q Suffix for Automotive and Other Applications Requiring Unique Site and Control Change Requirements; AEC−Q100 Qualified and PPAP Capable.

MECHANICAL CASE OUTLINE
PACKAGE DIMENSIONS

SOIC−20 WB
CASE 751D−05
ISSUE H

DATE 22 APR 2015

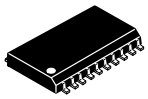

SCALE 1:1

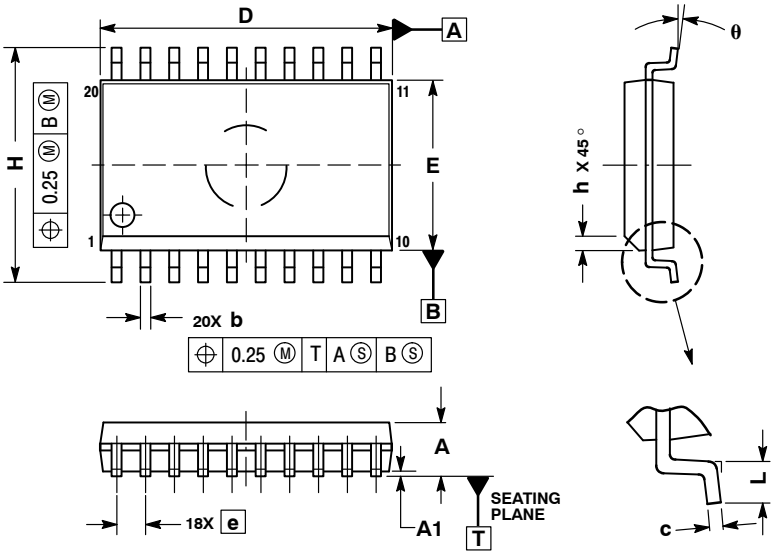

NOTES:
1. DIMENSIONS ARE IN MILLIMETERS.
2. INTERPRET DIMENSIONS AND TOLERANCES PER ASME Y14.5M, 1994.
3. DIMENSIONS D AND E DO NOT INCLUDE MOLD PROTRUSION.
4. MAXIMUM MOLD PROTRUSION 0.15 PER SIDE.
5. DIMENSION B DOES NOT INCLUDE DAMBAR PROTRUSION. ALLOWABLE PROTRUSION SHALL BE 0.13 TOTAL IN EXCESS OF B DIMENSION AT MAXIMUM MATERIAL CONDITION.

	MILLIMETERS	
DIM	MIN	MAX
A	2.35	2.65
A1	0.10	0.25
b	0.35	0.49
c	0.23	0.32
D	12.65	12.95
E	7.40	7.60
e	1.27 BSC	
H	10.05	10.55
h	0.25	0.75
L	0.50	0.90
θ	0°	7°

RECOMMENDED SOLDERING FOOTPRINT*

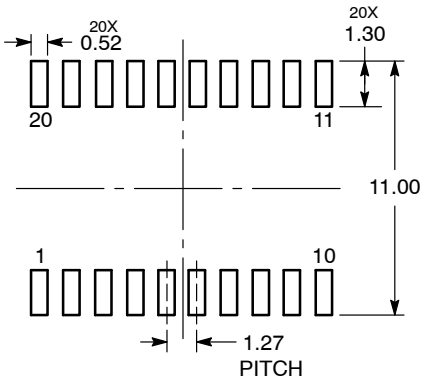

DIMENSIONS: MILLIMETERS

*For additional information on our Pb−Free strategy and soldering details, please download the ON Semiconductor Soldering and Mounting Techniques Reference Manual, SOLDERRM/D.

GENERIC MARKING DIAGRAM*

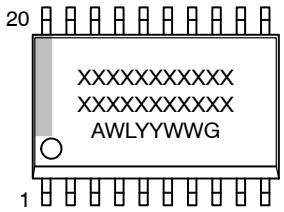

XXXXX = Specific Device Code
A = Assembly Location
WL = Wafer Lot
YY = Year
WW = Work Week
G = Pb−Free Package

*This information is generic. Please refer to device data sheet for actual part marking. Pb−Free indicator, “G” or microdot “▪”, may or may not be present. Some products may not follow the Generic Marking.

DOCUMENT NUMBER:	**98ASB42343B**	Electronic versions are uncontrolled except when accessed directly from the Document Repository. Printed versions are uncontrolled except when stamped “CONTROLLED COPY” in red.
DESCRIPTION:	**SOIC−20 WB**	**PAGE 1 OF 1**

onsemi and ONSEMI. are trademarks of Semiconductor Components Industries, LLC dba **onsemi** or its subsidiaries in the United States and/or other countries. **onsemi** reserves the right to make changes without further notice to any products herein. **onsemi** makes no warranty, representation or guarantee regarding the suitability of its products for any particular purpose, nor does **onsemi** assume any liability arising out of the application or use of any product or circuit, and specifically disclaims any and all liability, including without limitation special, consequential or incidental damages. **onsemi** does not convey any license under its patent rights nor the rights of others.

© Semiconductor Components Industries, LLC, 2019

MECHANICAL CASE OUTLINE
PACKAGE DIMENSIONS

ON Semiconductor®

TSSOP−20 WB
CASE 948E
ISSUE D

DATE 17 FEB 2016

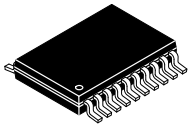

SCALE 2:1

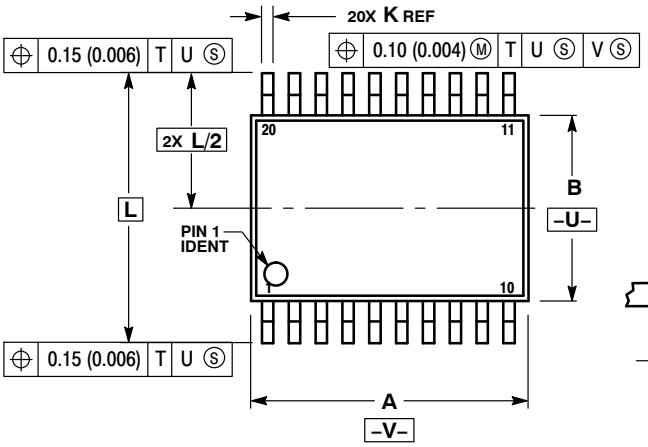

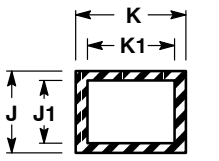

SECTION N−N

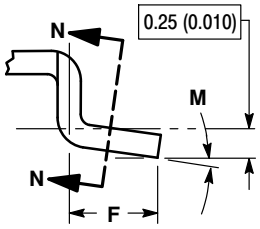

DETAIL E

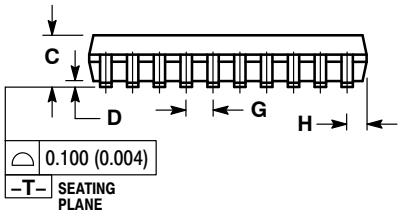

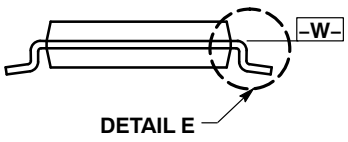

NOTES:
1. DIMENSIONING AND TOLERANCING PER ANSI Y14.5M, 1982.
2. CONTROLLING DIMENSION: MILLIMETER.
3. DIMENSION A DOES NOT INCLUDE MOLD FLASH, PROTRUSIONS OR GATE BURRS. MOLD FLASH OR GATE BURRS SHALL NOT EXCEED 0.15 (0.006) PER SIDE.
4. DIMENSION B DOES NOT INCLUDE INTERLEAD FLASH OR PROTRUSION. INTERLEAD FLASH OR PROTRUSION SHALL NOT EXCEED 0.25 (0.010) PER SIDE.
5. DIMENSION K DOES NOT INCLUDE DAMBAR PROTRUSION. ALLOWABLE DAMBAR PROTRUSION SHALL BE 0.08 (0.003) TOTAL IN EXCESS OF THE K DIMENSION AT MAXIMUM MATERIAL CONDITION.
6. TERMINAL NUMBERS ARE SHOWN FOR REFERENCE ONLY.
7. DIMENSION A AND B ARE TO BE DETERMINED AT DATUM PLANE −W−.

	MILLIMETERS		INCHES	
DIM	MIN	MAX	MIN	MAX
A	6.40	6.60	0.252	0.260
B	4.30	4.50	0.169	0.177
C	---	1.20	---	0.047
D	0.05	0.15	0.002	0.006
F	0.50	0.75	0.020	0.030
G	0.65 BSC		0.026 BSC	
H	0.27	0.37	0.011	0.015
J	0.09	0.20	0.004	0.008
J1	0.09	0.16	0.004	0.006
K	0.19	0.30	0.007	0.012
K1	0.19	0.25	0.007	0.010
L	6.40 BSC		0.252 BSC	
M	0°	8°	0°	8°

SOLDERING FOOTPRINT

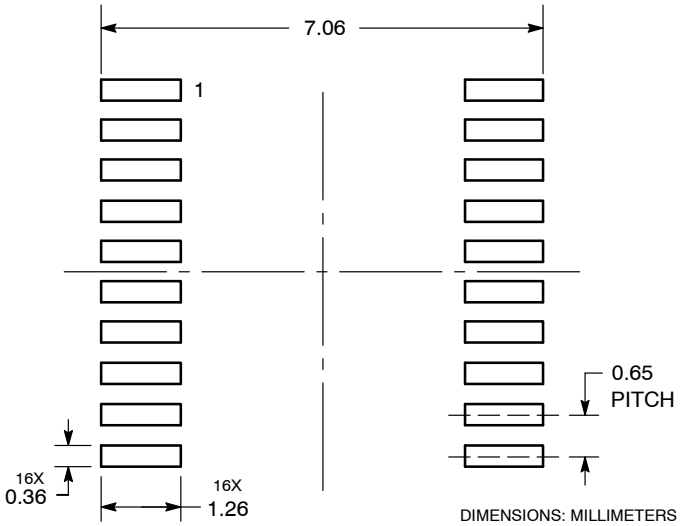

DIMENSIONS: MILLIMETERS

GENERIC MARKING DIAGRAM*

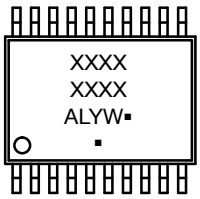

A = Assembly Location
L = Wafer Lot
Y = Year
W = Work Week
▪ = Pb−Free Package

(Note: Microdot may be in either location)

*This information is generic. Please refer to device data sheet for actual part marking. Pb−Free indicator, “G” or microdot “ ▪”, may or may not be present.

DOCUMENT NUMBER:	98ASH70169A	Electronic versions are uncontrolled except when accessed directly from the Document Repository. Printed versions are uncontrolled except when stamped “CONTROLLED COPY” in red.
DESCRIPTION:	TSSOP−20 WB	PAGE 1 OF 1

ON Semiconductor and ON are trademarks of Semiconductor Components Industries, LLC dba ON Semiconductor or its subsidiaries in the United States and/or other countries. ON Semiconductor reserves the right to make changes without further notice to any products herein. ON Semiconductor makes no warranty, representation or guarantee regarding the suitability of its products for any particular purpose, nor does ON Semiconductor assume any liability arising out of the application or use of any product or circuit, and specifically disclaims any and all liability, including without limitation special, consequential or incidental damages. ON Semiconductor does not convey any license under its patent rights nor the rights of others.

© Semiconductor Components Industries, LLC, 2019

onsemi, , and other names, marks, and brands are registered and/or common law trademarks of Semiconductor Components Industries, LLC dba "**onsemi**" or its affiliates and/or subsidiaries in the United States and/or other countries. **onsemi** owns the rights to a number of patents, trademarks, copyrights, trade secrets, and other intellectual property. A listing of **onsemi**'s product/patent coverage may be accessed at www.onsemi.com/site/pdf/Patent−Marking.pdf. **onsemi** reserves the right to make changes at any time to any products or information herein, without notice. The information herein is provided "as−is" and **onsemi** makes no warranty, representation or guarantee regarding the accuracy of the information, product features, availability, functionality, or suitability of its products for any particular purpose, nor does **onsemi** assume any liability arising out of the application or use of any product or circuit, and specifically disclaims any and all liability, including without limitation special, consequential or incidental damages. Buyer is responsible for its products and applications using **onsemi** products, including compliance with all laws, regulations and safety requirements or standards, regardless of any support or applications information provided by **onsemi**. "Typical" parameters which may be provided in **onsemi** data sheets and/or specifications can and do vary in different applications and actual performance may vary over time. All operating parameters, including "Typicals" must be validated for each customer application by customer's technical experts. **onsemi** does not convey any license under any of its intellectual property rights nor the rights of others. **onsemi** products are not designed, intended, or authorized for use as a critical component in life support systems or any FDA Class 3 medical devices or medical devices with a same or similar classification in a foreign jurisdiction or any devices intended for implantation in the human body. Should Buyer purchase or use **onsemi** products for any such unintended or unauthorized application, Buyer shall indemnify and hold **onsemi** and its officers, employees, subsidiaries, affiliates, and distributors harmless against all claims, costs, damages, and expenses, and reasonable attorney fees arising out of, directly or indirectly, any claim of personal injury or death associated with such unintended or unauthorized use, even if such claim alleges that **onsemi** was negligent regarding the design or manufacture of the part. **onsemi** is an Equal Opportunity/Affirmative Action Employer. This literature is subject to all applicable copyright laws and is not for resale in any manner.

ADDITIONAL INFORMATION

TECHNICAL PUBLICATIONS:
Technical Library: www.onsemi.com/design/resources/technical−documentation
onsemi Website: www.onsemi.com

ONLINE SUPPORT: www.onsemi.com/support
For additional information, please contact your local Sales Representative at www.onsemi.com/support/sales