MC74HC377A

Octal D Flip-Flop with Common Clock and Enable

High−Performance Silicon−Gate CMOS

The MC74HC377A is identical in pinout to the LS273. The device inputs are compatible with standard CMOS outputs; with pullup resistors, they are compatible with LSTTL outputs.

This device consists of eight D flip−flops with common Clock and Enable ($\overline{E}$) inputs. Each flip−flop is loaded with a low−to−high transition of the Clock input. Enable ($\overline{E}$) is active low.

Features

- Output Drive Capability: 10 LSTTL Loads
- Outputs Directly Interface to CMOS, NMOS and TTL
- Operating Voltage Range: 2.0 to 6.0 V
- Low Input Current: 1.0 μA
- High Noise Immunity Characteristic of CMOS Devices
- In Compliance with the Requirements Defined by JEDEC Standard No. 7A
- Chip Complexity: 264 FETs or 66 Equivalent Gates
- These are Pb−Free Devices

DISCONTINUED
THIS DEVICE IS NOT RECOMMENDED FOR NEW DESIGN
PLEASE CONTACT YOUR onsemi
REPRESENTATIVE FOR INFORMATION

ON Semiconductor®

http://onsemi.com

MARKING DIAGRAMS

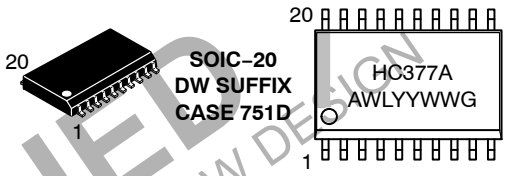

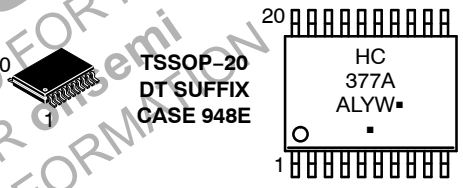

A	=	Assembly Location
WL, L	=	Wafer Lot
YY, Y	=	Year
WW, W	=	Work Week
G	=	Pb−Free Package
▪	=	Pb−Free Package

(Note: Microdot may be in either location)

PIN ASSIGNMENT

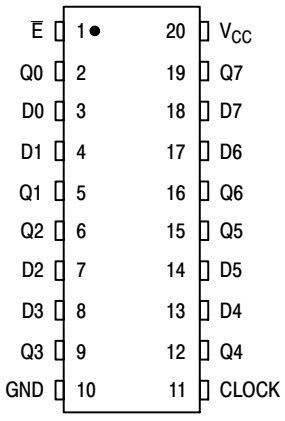

ORDERING INFORMATION

See detailed ordering and shipping information in the package dimensions section on page 2 of this data sheet.

© Semiconductor Components Industries, LLC, 2010

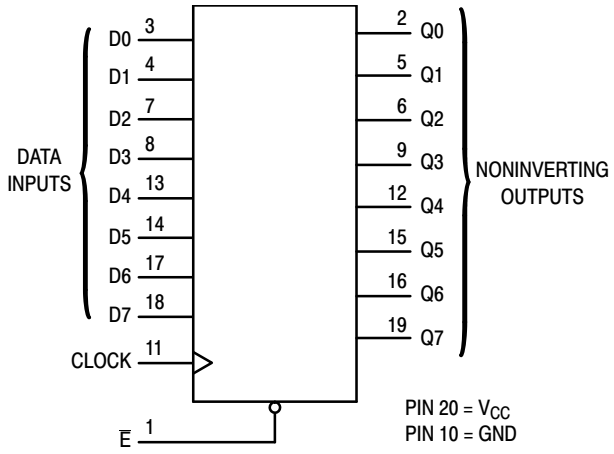

Figure 1. Logic Diagram

FUNCTION TABLE

Operating Modes	Inputs			Outputs
	Clock	$\overline{E}$	Dn	Qn
Load “1”	↑	l	h	H
Load “0”	↑	l	l	L
Hold (Do Nothing)	↑ X	h H	X X	No Change No Change

H = HIGH voltage level
h = HIGH voltage level one setup time prior to the LOW−to−HIGH CP transition
L = LOW voltage level
l = LOW voltage level one setup time prior to the LOW−to−HIGH CP transition
↑ = LOW−to−HIGH CP transition
X = Don’t Care

Design Criteria	Value	Units
Internal Gate Count*	66	ea
Internal Gate Propagation Delay	1.5	ns
Internal Gate Power Dissipation	5.0	μW
Speed Power Product	.0075	pJ

*Equivalent to a two−input NAND gate.

DISCONTINUED
THIS DEVICE IS NOT RECOMMENDED FOR NEW DESIGN
PLEASE CONTACT YOUR onsemi
REPRESENTATIVE FOR INFORMATION

ORDERING INFORMATION

Device	Package	Shipping†
MC74HC377ADWG	SOIC−20 WIDE (Pb−Free)	38 Units / Rail
MC74HC377ADWR2G	SOIC−20 WIDE (Pb−Free)	1000 Tape & Reel
MC74HC377ADTG	TSSOP−20*	75 Units / Rail
MC74HC377ADTR2G	TSSOP−20*	2500 Tape & Reel

†For information on tape and reel specifications, including part orientation and tape sizes, please refer to our Tape and Reel Packaging Specifications Brochure, BRD8011/D.
*This package is inherently Pb−Free.

MAXIMUM RATINGS

Symbol	Parameter	Value	Unit
V_{CC}	DC Supply Voltage (Referenced to GND)	–0.5 to + 7.0	V
V_{in}	DC Input Voltage (Referenced to GND)	–0.5 to V_{CC} + 0.5	V
V_{out}	DC Output Voltage (Referenced to GND)	–0.5 to V_{CC} + 0.5	V
I_{in}	DC Input Current, per Pin	±20	mA
I_{out}	DC Output Current, per Pin	± 25	mA
I_{CC}	DC Supply Current, V_{CC} and GND Pins	± 50	mA
P_D	Power Dissipation in Still Air SOIC Package†	500	mW
	TSSOP Package†	450	
T_{stg}	Storage Temperature	–65 to +150	°C

Stresses exceeding Maximum Ratings may damage the device. Maximum Ratings are stress ratings only. Functional operation above the Recommended Operating Conditions is not implied. Extended exposure to stresses above the Recommended Operating Conditions may affect device reliability.

†Derating – SOIC Package: – 7 mW/°C from 65° to 125°C
TSSOP Package: – 6.1 mW/°C from 65° to 125°C

This device contains protection circuitry to guard against damage due to high static voltages or electric fields. However, precautions must be taken to avoid applications of any voltage higher than maximum rated voltages to this high–impedance circuit. For proper operation, V_{in} and V_{out} should be constrained to the range GND ≤ (V_{in} or V_{out}) ≤ V_{CC}.

Unused inputs must always be tied to an appropriate logic voltage level (e.g., either GND or V_{CC}). Unused outputs must be left open.

RECOMMENDED OPERATING CONDITIONS

Symbol	Parameter		Min	Max	Unit
V_{CC}	DC Supply Voltage (Referenced to GND)		2.0	6.0	V
V_{in}, V_{out}	DC Input Voltage, Output Voltage (Referenced to GND)		0	V_{CC}	V
T_A	Operating Temperature, All Package Types		–55	+125	°C
t_r, t_f	Input Rise and Fall Time (Figure 2)	V_{CC} = 2.0 V	0	1000	ns
		V_{CC} = 4.5 V	0	500	
		V_{CC} = 6.0 V	0	400	

DISCONTINUED
THIS DEVICE IS NOT RECOMMENDED FOR NEW DESIGN
PLEASE CONTACT YOUR onsemi
REPRESENTATIVE FOR INFORMATION

DC ELECTRICAL CHARACTERISTICS (Voltages Referenced to GND)

Symbol	Parameter	Test Conditions	V_{CC} V	Guaranteed Limit			Unit
				–55 to 25°C	≤ 85°C	≤ 125°C	
V_{IH}	Minimum High–Level Input Voltage	V_{out} = V_{CC} – 0.1 V $\|I_{out}\| \le 20$ μA	2.0 3.0 4.5 6.0	1.5 2.1 3.15 4.2	1.5 2.1 3.15 4.2	1.5 2.1 3.15 4.2	V
V_{IL}	Maximum Low–Level Input Voltage	V_{out} = 0.1 V $\|I_{out}\| \le 20$ μA	2.0 3.0 4.5 6.0	0.5 0.9 1.35 1.8	0.5 0.9 1.35 1.8	0.5 0.9 1.35 1.8	V
V_{OH}	Minimum High–Level Output Voltage	V_{in} = V_{IH} $\|I_{out}\| \le 20$ μA	2.0 4.5 6.0	1.9 4.4 5.9	1.9 4.4 5.9	1.9 4.4 5.9	V
		V_{in} = V_{IH} $\|I_{out}\| \le 4.0$ mA $\|I_{out}\| \le 5.2$ mA	4.5 6.0	3.98 5.48	3.84 5.34	3.7 5.2	
V_{OL}	Maximum Low–Level Output Voltage	V_{in} = V_{IL} $\|I_{out}\| \le 20$ μA	2.0 4.5 6.0	0.1 0.1 0.1	0.1 0.1 0.1	0.1 0.1 0.1	V
		V_{in} = V_{IL} $\|I_{out}\| \le 4.0$ mA $\|I_{out}\| \le 5.2$ mA	4.5 6.0	0.26 0.26	0.33 0.33	0.4 0.4	
I_{in}	Maximum Input Leakage Current	V_{in} = V_{CC} or GND	6.0	±0.1	±1.0	±1.0	μA
I_{CC}	Maximum Quiescent Supply Current (per Package)	V_{in} = V_{CC} or GND I_{out} = 0 μA	6.0	4.0	40	160	μA

DISCONTINUED
THIS DEVICE IS NOT RECOMMENDED FOR NEW DESIGN
PLEASE CONTACT YOUR onsemi
REPRESENTATIVE FOR INFORMATION

AC Electrical Characteristics (C_L = 50 pF, Input t_r, t_f = 6.0 ns)

Symbol	Parameter	Test Conditions	V_{CC} (V)	Guaranteed Limits			Unit
				−55°C to 25°	≤ 85°C	≤ 125°C	
t_{PHL}, t_{PLH}	Maximum Propagation Delay Clock to Qn	Figures 2, 4	2.0	160	200	240	ns
			4.5	32	40	48	
			6.0	27	34	41	
t_{THL}, t_{TLH}	Maximum Output Transition Time	Figures 2, 4	2.0	75	95	110	ns
			4.5	15	19	22	
			6.0	13	16	19	
t_W	Minimum Clock Pulse Width High or Low	Figure 2	2.0	80	100	120	ns
			4.5	16	20	24	
			6.0	4	17	20	
t_{su}	Minimum Set−up Time D_n to Clock	Figure 3	2.0	60	75	90	ns
			4.5	12	15	18	
			6.0	10	13	15	
t_{su}	Minimum Set−up Time Enable to Clock	Figure 3	2.0	60	75	90	ns
			4.5	12	15	18	
			6.0	10	13	15	
t_h	Minimum Hold Time D_n to Clock	Figure 3	2.0	3	3	3	ns
			4.5	3	3	3	
			6.0	3	3	3	
t_h	Minimum Hold Time Enable to Clock	Figure 3	2.0	4	4	4	ns
			4.5	4	4	4	
			6.0	4	4	4	
f_{max}	Maximum Clock Pulse Frequency (50% duty cycle)	Figures 2, 4	2.0	6	5	4	ns
			4.5	30	24	20	
			6.0	35	28	24	
C_{in}	Maximum Input Capacitance		−	10	10	10	pF

C_{PD} (Note 1)	Typical @ 25°C, V_{CC} = 5.0 V	pF
Power Dissipation Capacitance	35	

1. C_{PD} is defined as the value of the IC's equivalent capacitance from which the operating current can be calculated from: I_{CC}(operating) ≈ C_{PD} x V_{CC} x f_{IN} x N_{SW} where N_{SW} = total number of outputs switching and f_{IN} = switching frequency.

DISCONTINUED
THIS DEVICE IS NOT RECOMMENDED FOR NEW DESIGN
PLEASE CONTACT YOUR onsemi REPRESENTATIVE FOR INFORMATION

SWITCHING WAVEFORMS

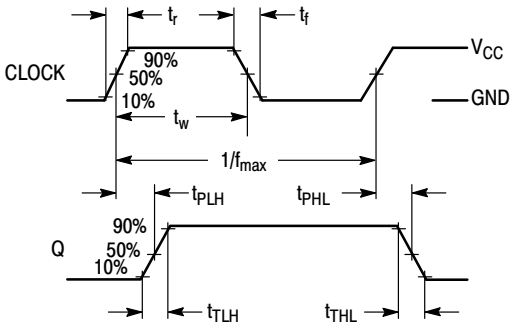

Figure 2.

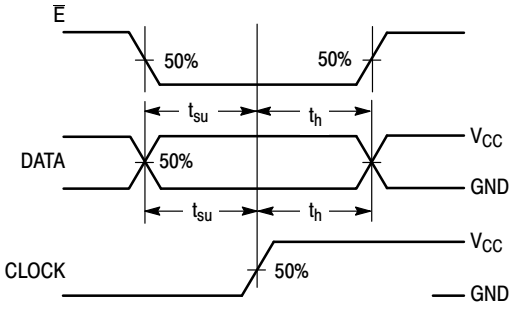

Figure 3.

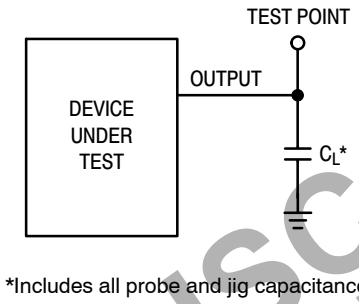

*Includes all probe and jig capacitance

Figure 4. Test Circuit

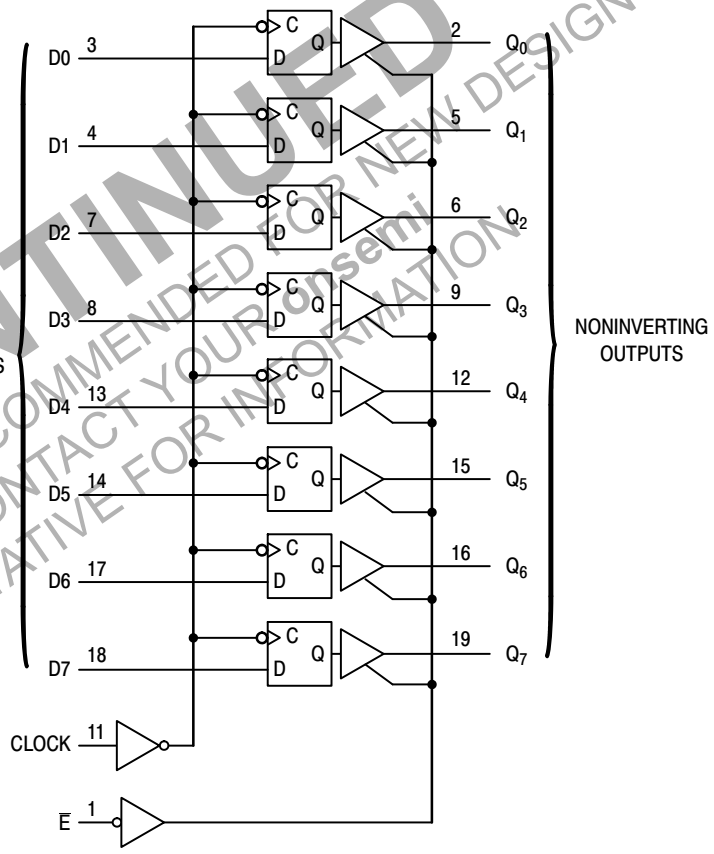

Figure 5. Expanded Logic Diagram

DISCONTINUED
THIS DEVICE IS NOT RECOMMENDED FOR NEW DESIGN
PLEASE CONTACT YOUR onsemi
REPRESENTATIVE FOR INFORMATION

MECHANICAL CASE OUTLINE
PACKAGE DIMENSIONS

SOIC−20 WB
CASE 751D−05
ISSUE H

DATE 22 APR 2015

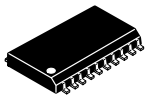

SCALE 1:1

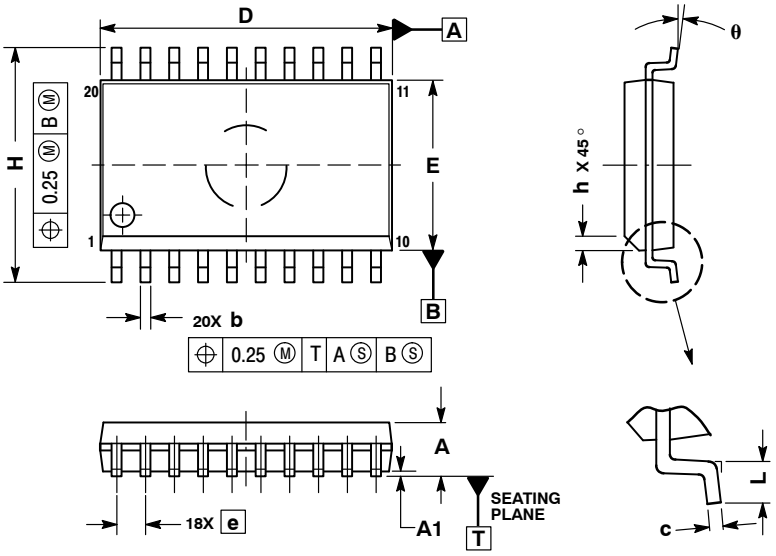

NOTES:
1. DIMENSIONS ARE IN MILLIMETERS.
2. INTERPRET DIMENSIONS AND TOLERANCES PER ASME Y14.5M, 1994.
3. DIMENSIONS D AND E DO NOT INCLUDE MOLD PROTRUSION.
4. MAXIMUM MOLD PROTRUSION 0.15 PER SIDE.
5. DIMENSION B DOES NOT INCLUDE DAMBAR PROTRUSION. ALLOWABLE PROTRUSION SHALL BE 0.13 TOTAL IN EXCESS OF B DIMENSION AT MAXIMUM MATERIAL CONDITION.

	MILLIMETERS	
DIM	MIN	MAX
A	2.35	2.65
A1	0.10	0.25
b	0.35	0.49
c	0.23	0.32
D	12.65	12.95
E	7.40	7.60
e	1.27 BSC	
H	10.05	10.55
h	0.25	0.75
L	0.50	0.90
θ	0°	7°

RECOMMENDED SOLDERING FOOTPRINT*

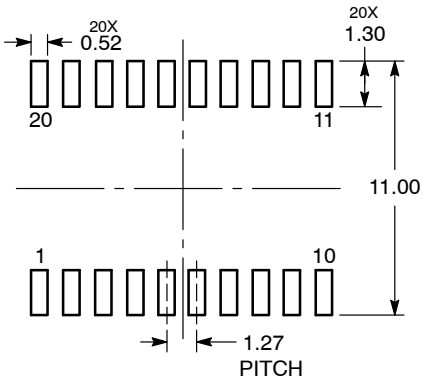

DIMENSIONS: MILLIMETERS

*For additional information on our Pb−Free strategy and soldering details, please download the ON Semiconductor Soldering and Mounting Techniques Reference Manual, SOLDERRM/D.

GENERIC MARKING DIAGRAM*

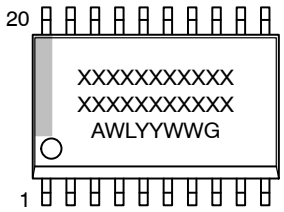

XXXXX = Specific Device Code
A = Assembly Location
WL = Wafer Lot
YY = Year
WW = Work Week
G = Pb−Free Package

*This information is generic. Please refer to device data sheet for actual part marking. Pb−Free indicator, “G” or microdot “▪”, may or may not be present. Some products may not follow the Generic Marking.

DOCUMENT NUMBER:	**98ASB42343B**	Electronic versions are uncontrolled except when accessed directly from the Document Repository. Printed versions are uncontrolled except when stamped “CONTROLLED COPY” in red.
DESCRIPTION:	**SOIC−20 WB**	**PAGE 1 OF 1**

onsemi and ONSEMI. are trademarks of Semiconductor Components Industries, LLC dba **onsemi** or its subsidiaries in the United States and/or other countries. **onsemi** reserves the right to make changes without further notice to any products herein. **onsemi** makes no warranty, representation or guarantee regarding the suitability of its products for any particular purpose, nor does **onsemi** assume any liability arising out of the application or use of any product or circuit, and specifically disclaims any and all liability, including without limitation special, consequential or incidental damages. **onsemi** does not convey any license under its patent rights nor the rights of others.

© Semiconductor Components Industries, LLC, 2019

MECHANICAL CASE OUTLINE
PACKAGE DIMENSIONS

ON Semiconductor®

TSSOP−20 WB
CASE 948E
ISSUE D

DATE 17 FEB 2016

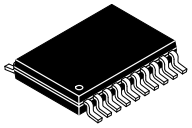

SCALE 2:1

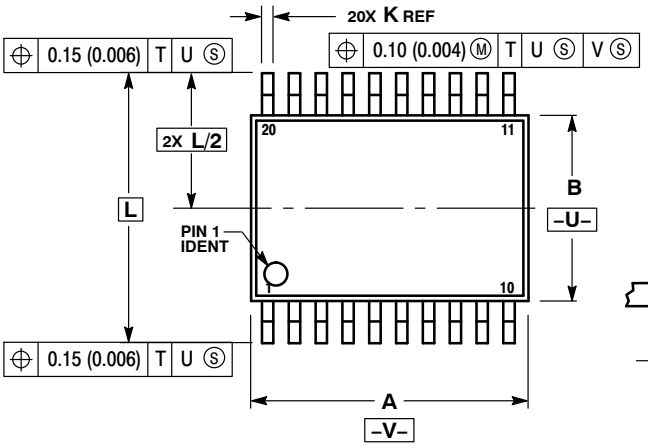

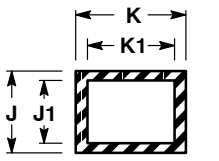

SECTION N−N

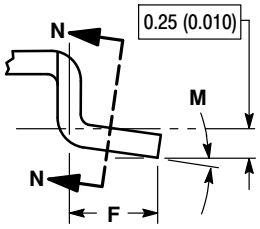

DETAIL E

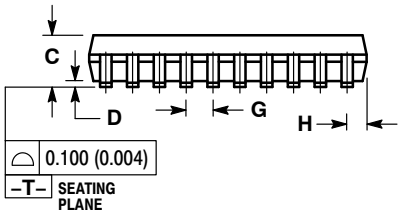

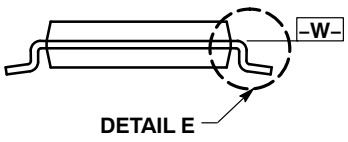

NOTES:
1. DIMENSIONING AND TOLERANCING PER ANSI Y14.5M, 1982.
2. CONTROLLING DIMENSION: MILLIMETER.
3. DIMENSION A DOES NOT INCLUDE MOLD FLASH, PROTRUSIONS OR GATE BURRS. MOLD FLASH OR GATE BURRS SHALL NOT EXCEED 0.15 (0.006) PER SIDE.
4. DIMENSION B DOES NOT INCLUDE INTERLEAD FLASH OR PROTRUSION. INTERLEAD FLASH OR PROTRUSION SHALL NOT EXCEED 0.25 (0.010) PER SIDE.
5. DIMENSION K DOES NOT INCLUDE DAMBAR PROTRUSION. ALLOWABLE DAMBAR PROTRUSION SHALL BE 0.08 (0.003) TOTAL IN EXCESS OF THE K DIMENSION AT MAXIMUM MATERIAL CONDITION.
6. TERMINAL NUMBERS ARE SHOWN FOR REFERENCE ONLY.
7. DIMENSION A AND B ARE TO BE DETERMINED AT DATUM PLANE −W−.

	MILLIMETERS		INCHES	
DIM	MIN	MAX	MIN	MAX
A	6.40	6.60	0.252	0.260
B	4.30	4.50	0.169	0.177
C	---	1.20	---	0.047
D	0.05	0.15	0.002	0.006
F	0.50	0.75	0.020	0.030
G	0.65 BSC		0.026 BSC	
H	0.27	0.37	0.011	0.015
J	0.09	0.20	0.004	0.008
J1	0.09	0.16	0.004	0.006
K	0.19	0.30	0.007	0.012
K1	0.19	0.25	0.007	0.010
L	6.40 BSC		0.252 BSC	
M	0°	8°	0°	8°

SOLDERING FOOTPRINT

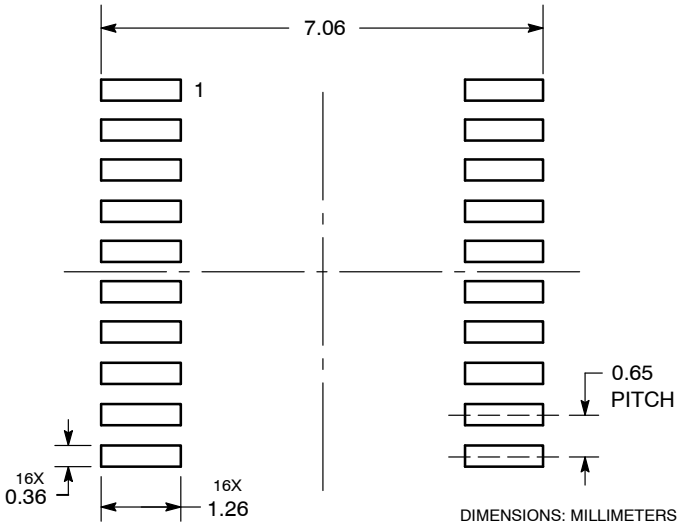

DIMENSIONS: MILLIMETERS

GENERIC MARKING DIAGRAM*

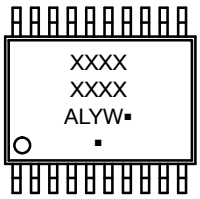

A = Assembly Location
L = Wafer Lot
Y = Year
W = Work Week
▪ = Pb−Free Package

(Note: Microdot may be in either location)

*This information is generic. Please refer to device data sheet for actual part marking. Pb−Free indicator, “G” or microdot “ ▪”, may or may not be present.

DOCUMENT NUMBER:	98ASH70169A	Electronic versions are uncontrolled except when accessed directly from the Document Repository. Printed versions are uncontrolled except when stamped “CONTROLLED COPY” in red.
DESCRIPTION:	TSSOP−20 WB	PAGE 1 OF 1

ON Semiconductor and ON are trademarks of Semiconductor Components Industries, LLC dba ON Semiconductor or its subsidiaries in the United States and/or other countries. ON Semiconductor reserves the right to make changes without further notice to any products herein. ON Semiconductor makes no warranty, representation or guarantee regarding the suitability of its products for any particular purpose, nor does ON Semiconductor assume any liability arising out of the application or use of any product or circuit, and specifically disclaims any and all liability, including without limitation special, consequential or incidental damages. ON Semiconductor does not convey any license under its patent rights nor the rights of others.

© Semiconductor Components Industries, LLC, 2019

onsemi, , and other names, marks, and brands are registered and/or common law trademarks of Semiconductor Components Industries, LLC dba "**onsemi**" or its affiliates and/or subsidiaries in the United States and/or other countries. **onsemi** owns the rights to a number of patents, trademarks, copyrights, trade secrets, and other intellectual property. A listing of **onsemi**'s product/patent coverage may be accessed at www.onsemi.com/site/pdf/Patent−Marking.pdf. **onsemi** reserves the right to make changes at any time to any products or information herein, without notice. The information herein is provided "as−is" and **onsemi** makes no warranty, representation or guarantee regarding the accuracy of the information, product features, availability, functionality, or suitability of its products for any particular purpose, nor does **onsemi** assume any liability arising out of the application or use of any product or circuit, and specifically disclaims any and all liability, including without limitation special, consequential or incidental damages. Buyer is responsible for its products and applications using **onsemi** products, including compliance with all laws, regulations and safety requirements or standards, regardless of any support or applications information provided by **onsemi**. "Typical" parameters which may be provided in **onsemi** data sheets and/or specifications can and do vary in different applications and actual performance may vary over time. All operating parameters, including "Typicals" must be validated for each customer application by customer's technical experts. **onsemi** does not convey any license under any of its intellectual property rights nor the rights of others. **onsemi** products are not designed, intended, or authorized for use as a critical component in life support systems or any FDA Class 3 medical devices or medical devices with a same or similar classification in a foreign jurisdiction or any devices intended for implantation in the human body. Should Buyer purchase or use **onsemi** products for any such unintended or unauthorized application, Buyer shall indemnify and hold **onsemi** and its officers, employees, subsidiaries, affiliates, and distributors harmless against all claims, costs, damages, and expenses, and reasonable attorney fees arising out of, directly or indirectly, any claim of personal injury or death associated with such unintended or unauthorized use, even if such claim alleges that **onsemi** was negligent regarding the design or manufacture of the part. **onsemi** is an Equal Opportunity/Affirmative Action Employer. This literature is subject to all applicable copyright laws and is not for resale in any manner.

ADDITIONAL INFORMATION

TECHNICAL PUBLICATIONS:
Technical Library: www.onsemi.com/design/resources/technical−documentation
onsemi Website: www.onsemi.com

ONLINE SUPPORT: www.onsemi.com/support
For additional information, please contact your local Sales Representative at www.onsemi.com/support/sales